Ground Fault Tripping

Type RL low voltage power circuit breakers equipped with the Static Trip III microprocessor-based trip unit are available with optional sensitive ground fault trip elements. Refer to Catalog Section 3061 for description and ratings. These circuit breakers and trip devices are UL listed.

Need For Ground Fault Tripping

Low voltage systems are normally solidly grounded, although ungrounded or high-resistance grounded low voltage systems are sometimes used if no line-to-neutral loads are involved. If the system is solidly grounded, then ground fault tripping should be applied because high im-pedance and/or arcing ground faults can be too low in magnitude to be detected by the phase overcurrent trip elements. The National Electrical Code requires ground trip for the main circuit breaker of solidly grounded services exceeding 1000 amperes, and with neutral to ground voltages exceeding 150 volts. However, IEEE Recommended Practice* advises that all circuit breakers 600A or above should have ground fault trip.

Sensitive ground fault tripping as an integral part of Static Trip III trip units is the preferred method of providing this protection, because:

1. It is integral with the circuit breaker, providing the same reliable tripping as the phase protection trip device.

2. No external wiring and connections are needed, so reliability is enhanced.

3. All components are factory wired and tested.

4. Cable installations through zero sequence sensors are not required, so cable space is not restricted.

5. The energy for tripping is taken from the fault; separate control power is not needed.

6. An LCD target indicates the cause of tripping.

7. A portable test set permits field testing.

8. Current levels and trip information may be transmitted to a supervising computer as part of the ACCESS™ system.

Figure 1. Breaker Wiring For Ground Protection On 3-Wire Systems. Residual Sensing.

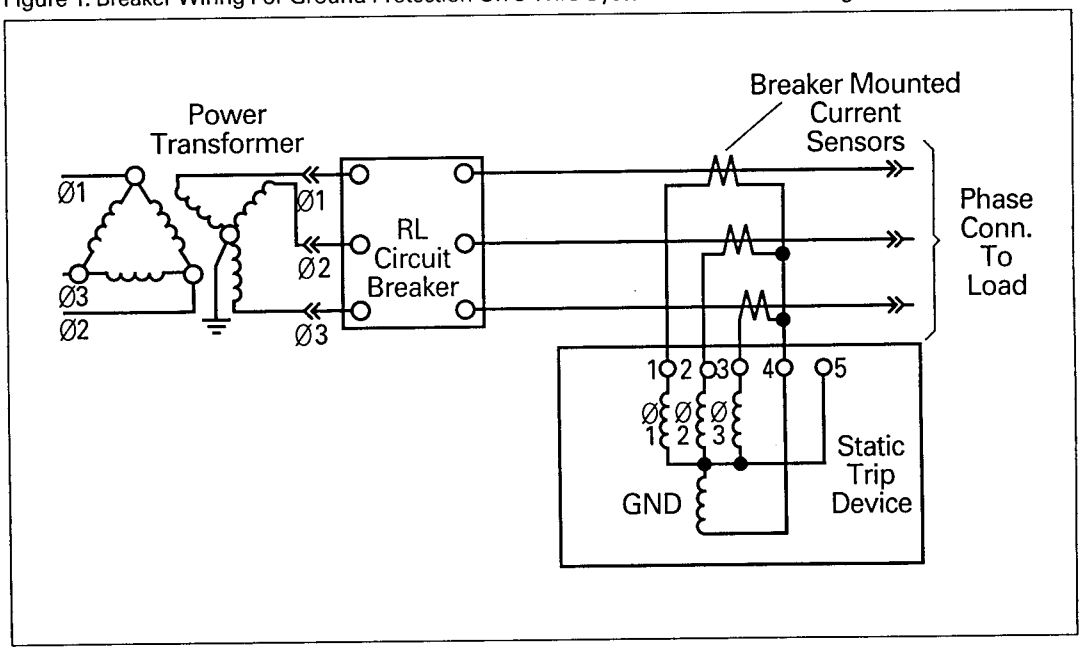

Methods of Ground Fault Tripping

A. Residual Ground Current Sensing — 3-Wire System (Figure 1)

This static trip device system always includes three current sensors mounted on the circuit breaker. A trip element is connected in series with each sensor to provide phase overcurrent protection. An additional ground trip element in the residual (neutral) circuit of the 3 current sensors will sense ground fault current only, and not load current. This permits more sensitive ratings to protect against the low magnitude ground faults. (Refer to Static Trip III Rating Table and Time Current Characteristics in Section 3061.)

Under normal conditions, the vector sum of the current in all of the phases equals zero. No current would flow in the GND trip element, which is also true under the condition of a phase-to-phase fault.

A phase-to-ground fault would cause a current to flow in the GND trip element. If the magnitude of this current exceeds the pickup setting, the trip device will operate to trip the breaker.

*IEEE Recommended Practice for Protection and Coordination of Industrial and Commercial Power Systems (Buff Book) IEEE Std. 242.

Ground Fault Tripping

Three Wire And Four Wire Systems

Low voltage solidly grounded systems may be either 3-wire or 4-wire, depending on the load connections. If all loads are connected phase-to-phase, then it is a 3-wire system. The system neutral is connected to the ground bus, and a neutral bus is not carried throughout the system. Examples of these loads are motors and lighting transformers.

If the system has single phase loads connected from line-to-neutral, then it is a 4-wire system. The system neutral must be carried to the line-to-neutral loads in addition to the ground.

The residual ground current sensing shown in Figure 1 and 5 are suitable for 3-wire systems. However, if this is applied to a 4-wire circuit, the normal neutral current will appear to be a ground fault to the ground trip element. If the normal neutral current exceeds the pickup setting, it will cause false tripping.

Source Of Neutral Current

Neutral current in 4-wire circuits will exist under normal conditions if the loads are not balanced between phases. Furthermore, the arc discharge of fluorescent or mercury vapor lights, combined with their associated capacitors and ballasts, are a source of harmonics — particularly the third. Experience shows that the third harmonic current may be as high as 30% of the fundamental in the phase conductors and 90 to 95% in the neutral. Feeder circuits serving such lighting predominantly have the neutral conductor rated 100% of the lighting load and the trip devices must not cause false tripping on this normal neutral current. Thus, the neutral current may be a low value of fundamental in some applications, a combination of fundamental and third harmonic in other applications and, possibly, all third harmonic (up to 95% of the magnitude of phase current) in still others.

B. Residual Ground Current Sensing— 4-Wire System (Figure 2)

To avoid false tripping, a fourth current sensor is connected in the neutral conductor to sense normal neutral current. This fourth sensor is connected so that it cancels the normal neutral current which is developed in the residual circuit.

Figure 2. Breaker Wiring for Ground Protection On 4-Wire Systems, Residual Sensing

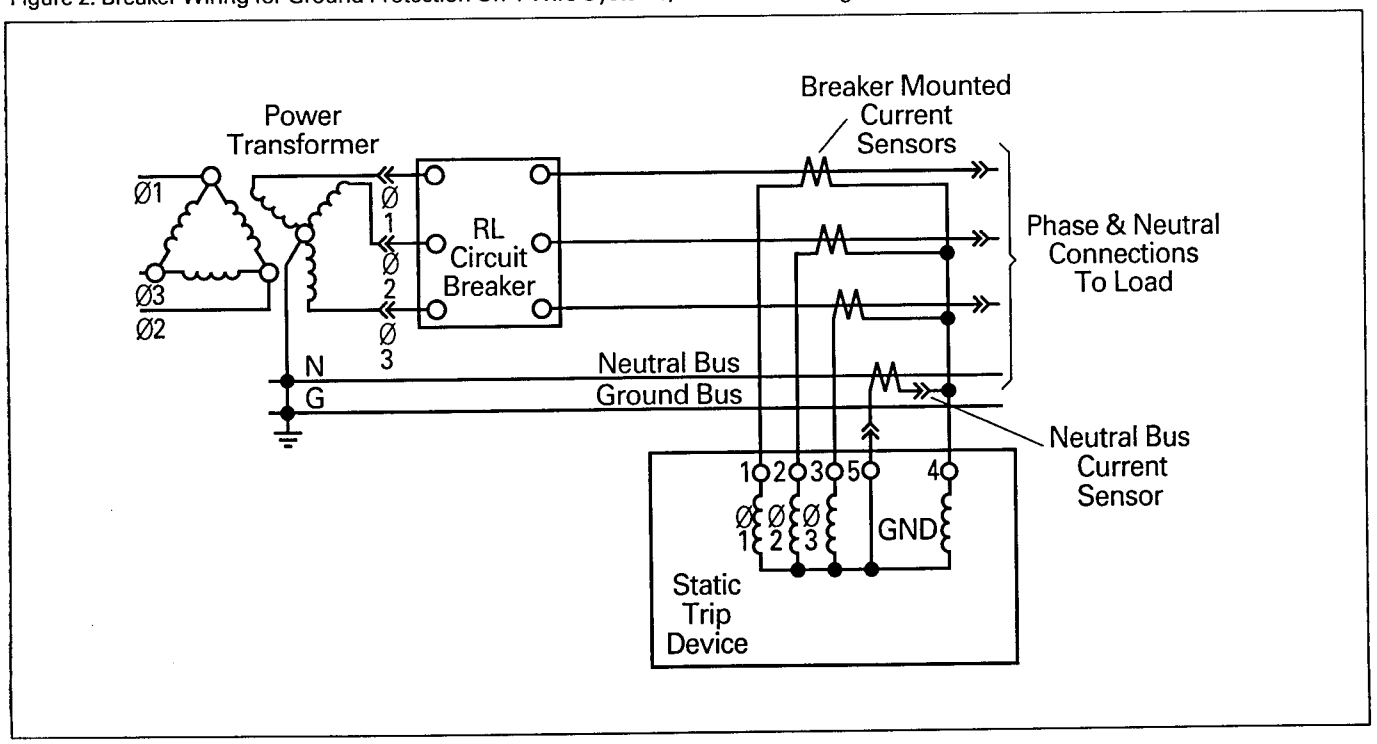

Ground Fault Tripping

Figure 3. Breaker Wiring For Ground Protection, On 3 Or 4 Wire System, Residual Sensing, Dual Winding.

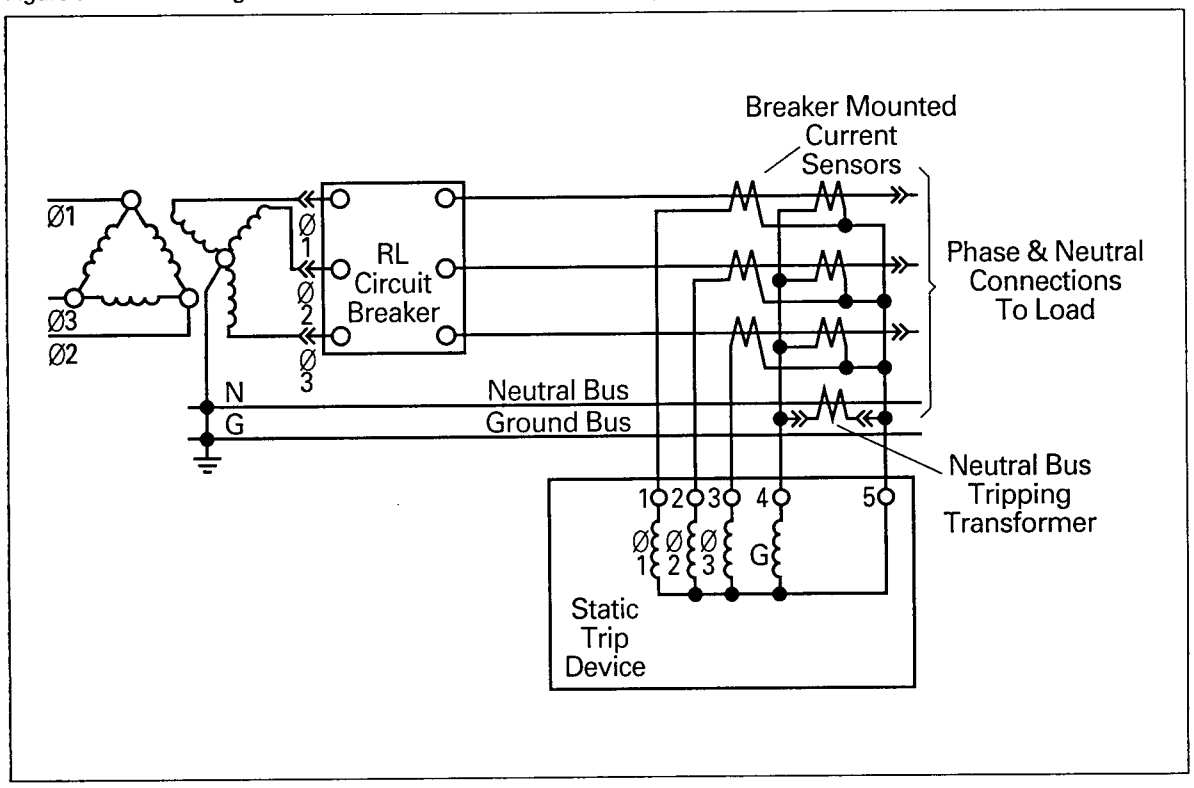

Under normal conditions, the vector sum of the current in all phases equals the neutral current. Disregarding the effects of the neutral sensor connections, the neutral current would flow through the GND pickup transformer. Since this is normal neutral current, pickup of the GND transformer is not desired. A sensor added to the neutral bus will see the neutral current flowing in the opposite direction. The result is a circulating current between the phase sensing current sensors and the neutral sensor, with no current flowing through the GND pickup transformer. This is similar to a differential relay circuit. When a phase-to-ground fault occurs, the vector sum of the phase currents will no longer equal the neutral current because the ground fault current returns via the ground bus and bypasses the neutral. If the magnitude of the phase-to-ground current exceeds the pickup setting of the GND transformer, the trip device will operate to trip the breaker.

C. Dual Winding Residual Ground Fault Sensing—3-Wire Or 4-Wire System (Figure 3)

Circuit breakers having phase current sensors larger than 2000A may require dual winding current sensors to limit ground fault tripping to a maximum of 1200A. The second winding, rated 2000A coupled with the maximum 60% ground fault pickup adjustment on the static trip device, allows a maximum setting of 1200A. Dual windings permit interchanging trip devices between different size circuit breakers. The 2000A current sensors used are suitable for 4000A continuous current.

This type of system is similar in operation to the previously discussed single winding residual methods with the exception that the higher rated current sensors windings are connected to the phase trip elements and the 2000A winding is connected to the ground trip element. For 4 wire loads, a 2000A single winding neutral tripping transformers should be used.

Ground Fault Tripping

D. Direct Ground Current Sensing—3-Wire Or 4-Wire System (Figure 4)

In this alternate scheme, the ground trip element is fed directly from a current sensor in the ground strap of the system. Since there is only one such grounding point for a low voltage system, this method can only be used for main and tie circuit breakers. It is principally used in the 4-wire double ended substation application shown later.

A block diagram of the tripping system using direct ground current sensing is shown in Figure 4. The connections differ from those used in the residual method described previously. The common of the phase sensing current sensors is connected to terminal #5 of the static trip device, forming independent circuits for the phases and neutral. The GND trip element is connected directly across the ground strap current sensor. Under normal conditions there would be no current flowing between the ground and neutral bus through the ground strap.

When a phase-to-ground fault occurs, the return path of the ground fault current is from the ground bus to the neutral bus through the ground strap. The ground strap current sensor senses this current and applies it directly to the GND trip element. If the magnitude of the fault exceeds the pickup setting of the ground element, the trip device will operate to trip the breaker.

E. Ground Fault Protection Applied to 4-Wire Double Ended Secondary Substations, Direct Ground Current Sensing, Single Point Grounding

The direct ground sensing trip device can be used for main and tie breakers in double ended substations and substations with provisions for future double ending. One connection from the ground bus to the neutral bus is made, and a special version of the direct ground current sensing system is used. Because physical location of the sensing current transformers is critical, each application should be carefully designed.

Systems requirements for this application which should be considered are as follows:

1. The neutral bus should only be grounded once and this preferably near the bus tie breaker. The neutral current sensor for the tie breaker should be mounted on the link between the neutral bus and the ground bus. The neutral current sensors for the main breaker should be mounted on the neutral bus immediately adjacent and on each side of the ground link connection.

2. When the transformer is located remote from the switchgear, the transformer neutral must be carried as an insulated ungrounded conductor into the switchgear. It must not be grounded at the transformer.

3. Each main breaker must have one 'a' auxiliary switch available for the ground sensor circuit.

Figure 4. Breaker Wiring For Ground Protection, Direct Ground Current Sensing

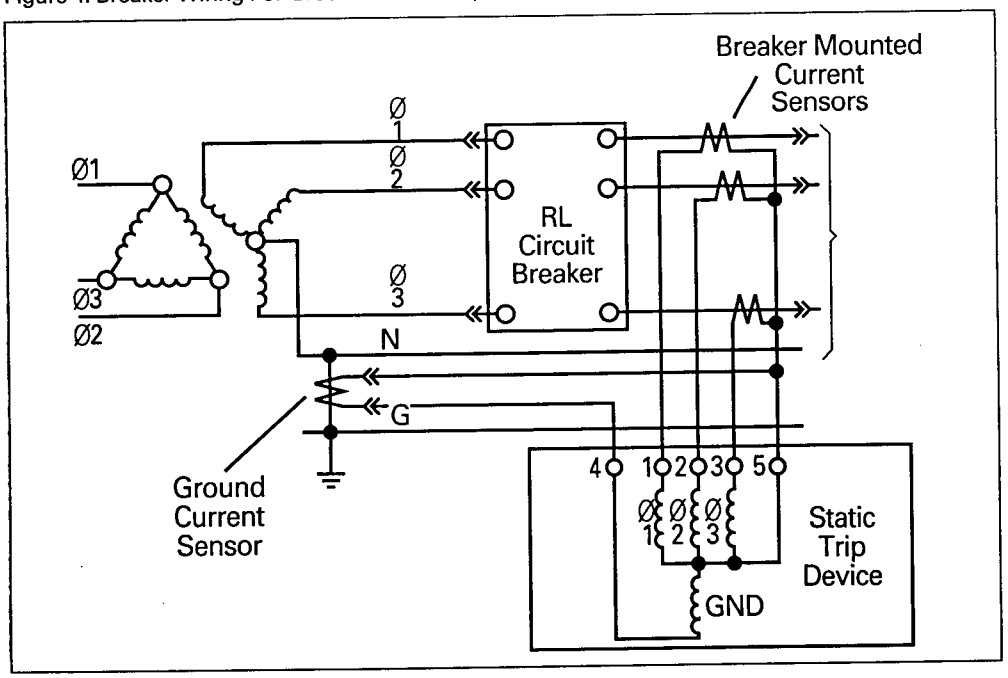

Ground Fault Tripping

4. The tie breaker must have one 'a' auxiliary switch and a normally closed TOC switch for the ground sensor circuit.

5. Direct ground sensing Static Trip III trip unit on the main and tie breakers.

6. A neutral bus must be furnished extending through all low voltage cubicles. All neutral load connections must be made between the transformer neutral and the main breaker neutral current sensors. (Refer to Figure 5.)

Figure 5. Double Ended Substation, 4-Wire System. Details Of Ground Current Sensor Connection At System Grounding Point.

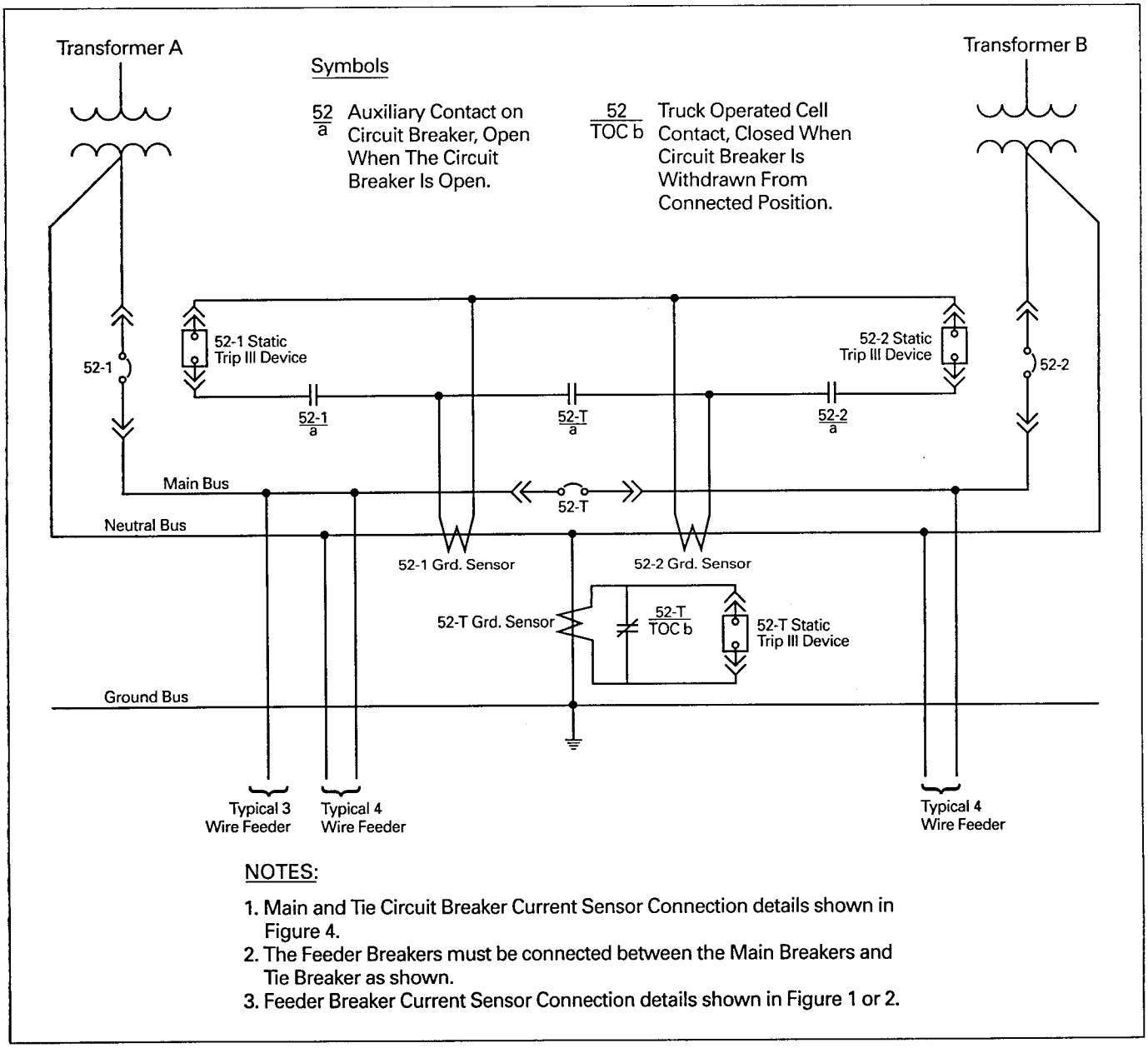

NOTES:

1. Main and Tie Circuit Breaker Current Sensor Connection details shown in Figure 4.
2. The Feeder Breakers must be connected between the Main Breakers and Tie Breaker as shown.
3. Feeder Breaker Current Sensor Connection details shown in Figure 1 or 2.

Ground Fault Tripping

Notes

1. The system ground connection is at the tie breaker as shown. Do not ground at the transformers. The feeder neutrals must connect to the neutral bus between the main and tie, as shown.

2. The main breakers are to have longer time delay settings than the tie, but are otherwise interchangeable.

Explanation

Under normal conditions the tie will be open. Normal neutral current will not go through either main breaker ground sensing CTs due to their physical location. A bus ground fault will trip the main breaker for its bus.

When a main is open and the tie is closed, the auxiliary contacts set up a differential circuit, so normal neutral current will cancel, and not cause false tripping. A bus ground fault will trip the tie breaker, isolating the bus. If the fault is not cleared, the associated main breaker will trip.

F. Ground Fault Protection Applied to 4-Wire Double Ended Secondary Substations, Modified Differential Residual Sensing Method.*

There are some double ended substation applications that prevent the use of the

Figure 6. Modified Differential Residual Sensing Method

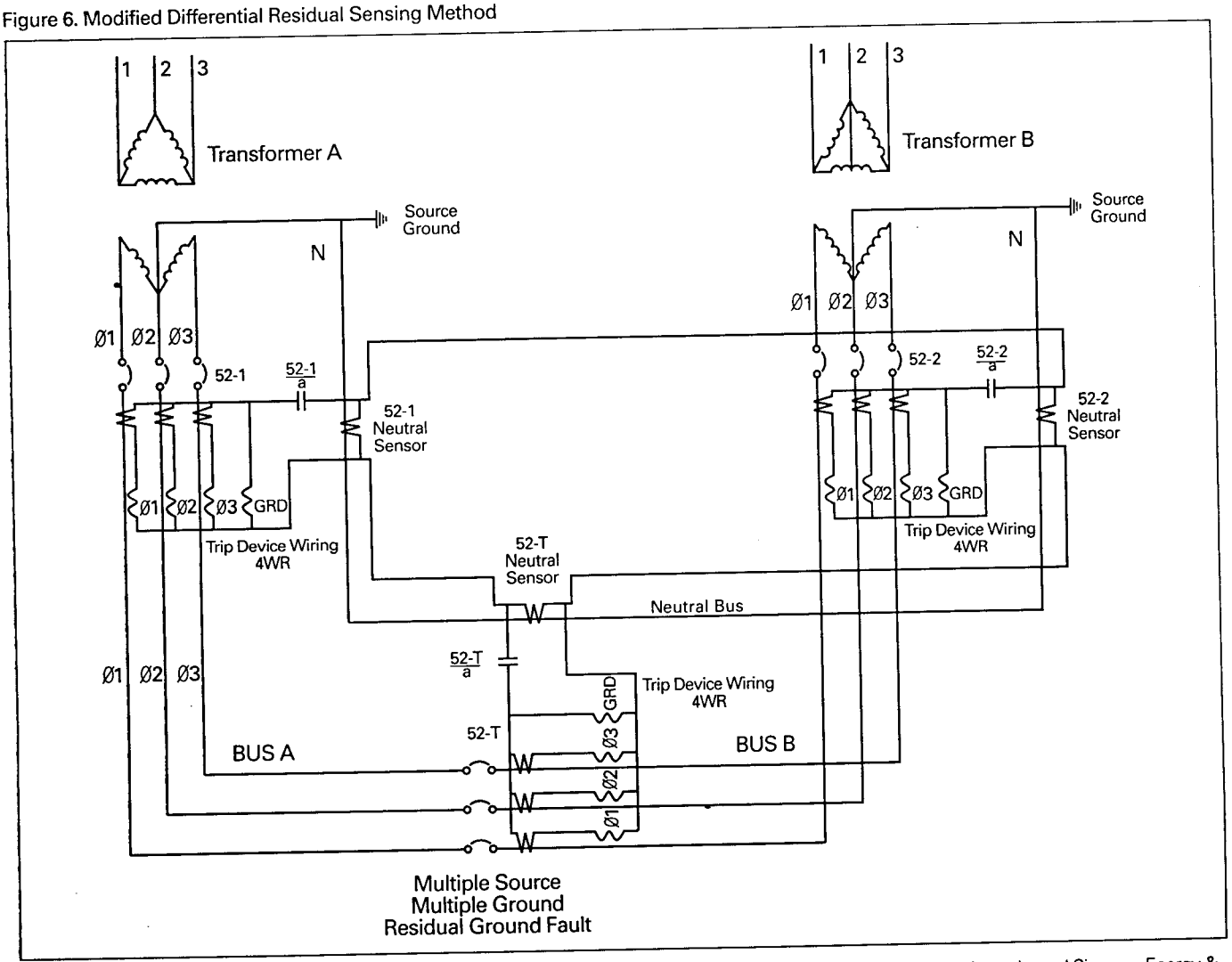

*General Electric Company owns U.S. Patent No. 4,110,808 and corresponding foreign patents. General Electric Company has released Siemens Energy & Automation, Inc. and its customers from all manner of claims by reason of infringement of these patents.

Ground Fault Tripping

T connection single point ground previously discussed such as transformers located remote from the switchgear and grounded at their location. This is defined as a multiple source, multiple ground system and creates additional ground return paths for ground fault current. Standard direct sensing or residual sensing ground fault schemes may not properly recognize the level of ground current due to ground current flow in the neutral bus of the switchgear. In these cases a Modified Differential Residual Ground Fault Sensing Scheme should be used for main and tie circuit breakers. For proper operation of this scheme the following system requirements must be observed:

1. The sources must not be paralleled (one of the main breakers or the tie breaker must be open at any point).

2. A neutral current sensor is required for each main and tie circuit breaker. The circuit breakers are to be equipped with residual sensing Static Trip III trip devices

3. Each main and tie circuit breaker must have one "a" auxiliary contact for use in the neutral current sensor circuit. (Refer to Figure 6).

Explanation

Under normal conditions the tie circuit breaker will be open. The open "a" contact at the tie circuit breaker will force any secondary neutral sensor current at the tie breaker around the ioop. Normal neutral current will not cause tripping of either main breaker. The balance of currents in the residual circuit that is set up by the phase and neutral sensors at either of the breakers will prevent current flow through their ground pickup elements.

Similarly, if the tie breaker were closed and one of the main breakers open, the open "a" contact will force any secondary neutral current sensed by that breaker's neutral sensor to flow around the loop. This effectively balances the phase and neutral currents sensed at the tie breaker and the main breaker that is closed and will prevent false tripping.

Under ground fault conditions, any portion of the ground fault returning to the source through the supply source ground point will bypass all the neutral current sensors. A portion of the ground fault current may return to the supply source through the second source ground point. This ground fault current will return to the supply source from the second source ground point via the switchgear neutral bus. The neutral sensor for each main and tie breaker will see the same ground fault current and the same secondary neutral sensor current will be generated by all three sensors. Since this value is the same for all three neutral sensors the secondary current will be forced around the loop bypassing all three trip devices. An imbalance equal to the full magnitude of the fault will then be created in the residual sensing circuit of the breaker(s) supplying the fault current and those breakers will then trip. Main and tie circuit breakers should have proper selective coordination to allow the breaker closest to the fault to trip first.