SQUARE D®

CLASS 9422, TYPE TFB 1, TFB 2, TFB 3
BRACKET MOUNTED
FLANGE OPERATED 200 AMPERE DISCONNECT SWITCH

For Right Hand Operation

Instruction Sheet
30072-009-32-B
November, 1977

GENERAL INFORMATION

This kit contains a 200 amp. bracket mounted disconnect switch with operating mechanism and operating handle.

ENCLOSURE CONSTRUCTION

Construct enclosure maintaining minimum dimensions shown in Figure 1 or Figure 2 depending on your Type No.

ADJUSTMENTS

Disconnect Switch Operating Mechanisms require no adjustment for proper operation.

INSTALLATION DISCONNECT SWITCH

1. Mounting
   Weld or rivet Interlock Blade Mounting Bracket to enclosure door. (See Figure 2.) Attach Blade to Bracket with (2) 8-32 x 5/16 screws.
   Drill four holes in flange necessary to mount device. Cut out operator handle opening in enclosure flange. Mount Disconnect Switch to flange with (2) 1/4-20 x 3/8 screws from outside of flange. Place Trimplate over operator handle and attach to flange with (2) 8-32 x 1/2 screws from inside of flange (Figure 3).

THE INFORMATION BELOW IS FOR THE TYPE TFB 1, TFB 2

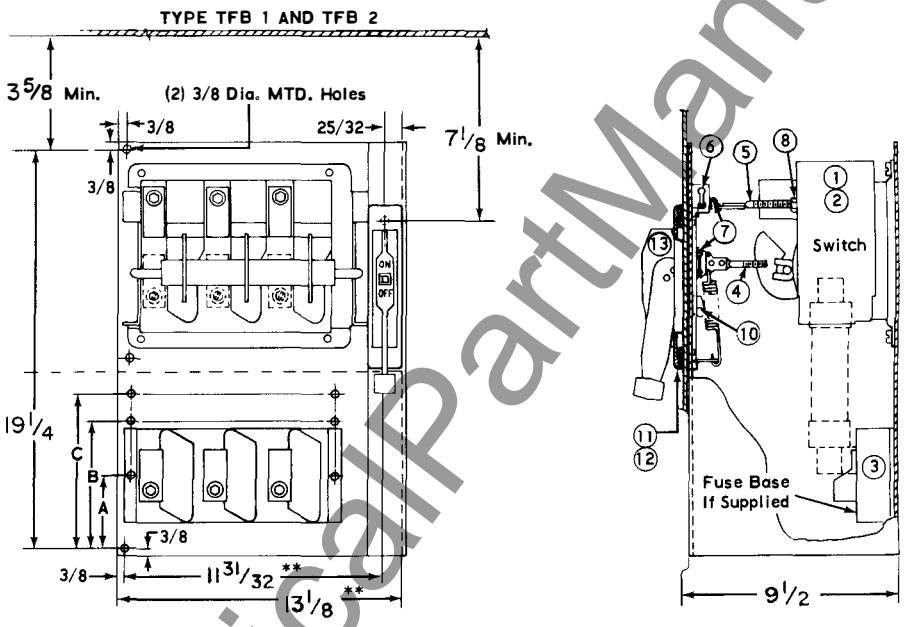

Figure 1

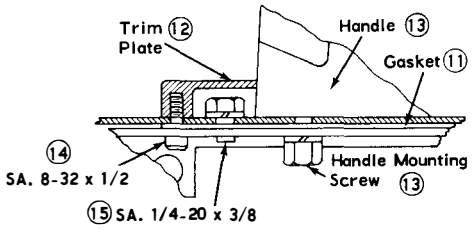

Trim Plate and Mounting Parts
Figure 3

FUSE LOCATION

TYPE	MAX. VOLTAGE	FUSE TYPE	USE MTG. HOLES
TFB 1	200A. 600V.	UNFUSED	NONE
TFB 2	200A. 250V.	CLASS H	B
TFB 2	200A. 600V.	CLASS H	A
TFB 2	200A. 600V.	CLASS J	C

REPLACEMENT PARTS LIST

ITEM	DESCRIPTION	PART NUMBER	QUANTITY TYPE TFB 1	QUANTITY TYPE TFB 2		
1	Disc. Sw. Unfused	31055-367-50	1	-		
2	Disc. Sw. Fusible	31055-378-50	-	1		
3	Fuse Base	31055-363-50	-	1		
4	Rod Assy	31055-162-53	1	1		
5	Rod Assy	31055-162-59	1	1		
6	Stiffener Coupling	31055-168-01	1	1		
7	Cotter Pin 1/8 x 1 1/4	24201-08400	2	2		
8	Nut 3/8-16	23002-00240	1	1		
9	S. A. 1/4-20 x 1/2	21916-20160	2	2		
10	Interlock Kit	31055-283-61	1	1		
11	Gasket	31055-280-01	1	1		
12	Trimplate	31055-281-03	1	1		
13	Handle	31055-176-51	1	1		
14	S. A. 8-32 x 1/2	21601-14160	2	2		
15	S. A. 1/4-20 x 3/8	21926-20120	2	2		

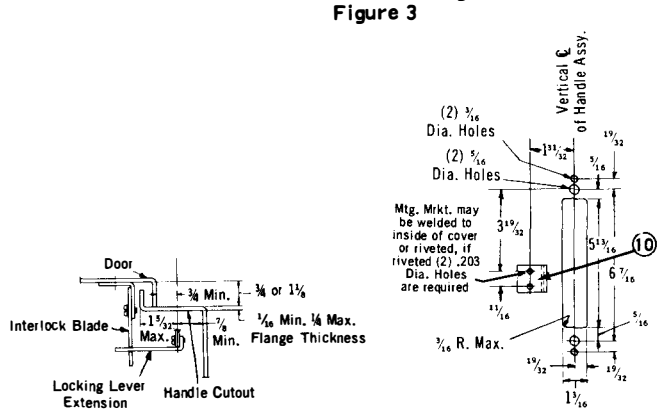

Drilling for Interlock Parts
Figure 2

www.ElectricalPartManuals.com

THE INFORMATION BELOW IS FOR THE
TYPE TFB3
SEE PAGE 1 FOR INSTALLATION AND ADJUSTMENT INFORMATION.

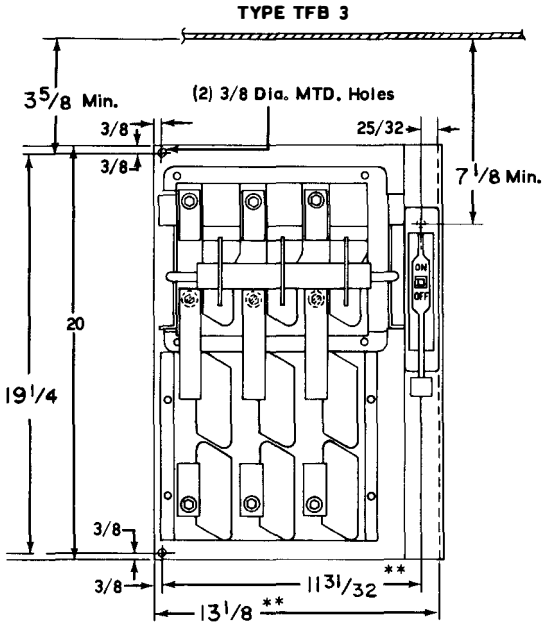

Figure 1

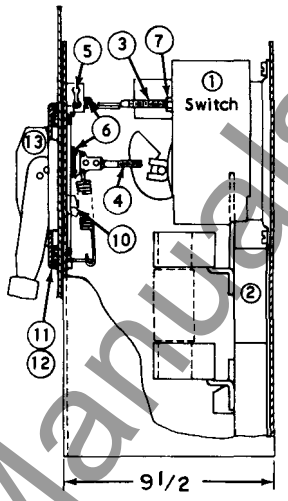

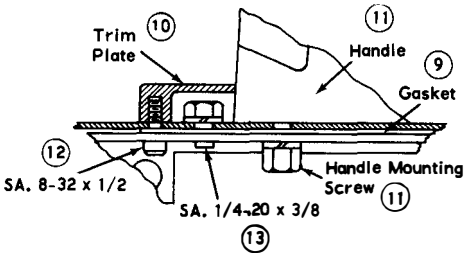

Trim Plate and Mounting Parts
Figure 3

REPLACEMENT PARTS LIST

ITEM	DESCRIPTION	PART NUMBER	QUANTITY TYPE TFB 3
1	Disc. Sw.	31055-367-50	1
2	Fuse Base	31055-362-50	1
3	Rod Assy	31055-162-53	1
4	Rod Assy	31055-162-59	1
5	Stiffener Coupling	31055-168-01	1
6	Cotter Pin 1/8 x 1 1/4	24201-08400	2
7	Nut 3/8-16	23002-00240	1
8	Interlock Kit	31055-283-61	1
9	Gasket	31055-280-01	1
10	Trimplate	31055-281-03	1
11	Handle	31055-176-51	1
12	S. A. 8-32 x 1/2	21601-14160	2
13	S. A. 1/4-20 x 3/8	21926-20120	2

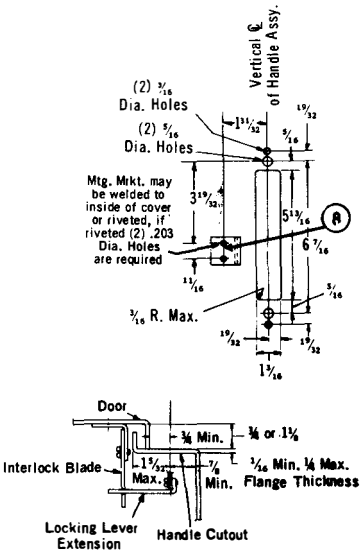

Drilling for Interlock Parts
Figure 2

www . ElectricalPartManuals . com