INSTALLATION • OPERATION • MAINTENANCE

INSTRUCTIONS

TYPE HCB PILOT WIRE RELAY SYSTEM

CAUTION Before putting protective relays into service, remove all blocking which may have been inserted for the purpose of securing the parts during shipment, make sure that all moving parts operate freely, inspect the contacts to see that they are clean and close properly, and operate the relay to check the settings and electrical connections.

APPLICATION

The type HCB relay is a high speed pilot wire relay designed for the complete phase and ground protection of two and three terminal transmission lines. Simultaneous tripping of the relay at each terminal is obtained in about 20 milliseconds for all faults. A complete installation for a two terminal line consists of two relays, two insulating transformers, and an interconnecting pilot wire circuit. For a three terminal line, three relays, three insulating transformers, and a wye-connected pilot wire circuit with branches of equal series resistance are required.

CONSTRUCTION

The relay consists of a combination positive and zero phase sequence filter, a saturating auxiliary transformer, two full wave rectifier units, a polar type relay unit, a neon lamp, and an indicating contactor switch (ICS), all mounted in a single case. The external equipment normally supplied with the relay consists of an insulating transformer, a milliammeter and test switch.

SEQUENCE FILTER

The sequence filter consists of a three-legged iron core reactor and a set of resistors designated R1 and Ro. The reactor has three windings; two primary and a tapped secondary winding, wound on the center leg of a "F" type of lamination. The secondary taps are wired to the circularly arranged R1 tap connections in the front of the relay. The R1 tap links also connect to the R_1 resistor (looped resistance wire). Ro consists of three tube resistors with taps wired to the circularly arranged Ro tap connections in the front of the relay. R_{1A} taps are on the R_1 resistance wire and are wired to the circularly arranged R_{1A} tap connections in the front of the relay.

SATURATING TRANSFORMER

The output of the sequence filter connects to the primary of a two-winding saturating transformer. The primary winding is tapped and wired to a tap block T in the front of the relay. The secondary winding is connected to the neon lamp and from a fixed tap to the relay coil circuits.

POLAR UNIT

This unit consists of a rectangular-shaped magnetic frame, an electromagnet, a permanent magnet, and an armature with either one or two contacts. The poles of the cresent-shaped permanent magnet bridge the magnetic frame. The magnetic frame consists of three pieces joined in the rear with two brass rods and silver solder. These non-magnetic joints represent air gaps which are bridged by two adjustable magnetic shunts. The operating and restraint windings are concentrically wound around a magnetic core. The armature is fastened to this core at one end and floats in the front air gap at the other end. The moving contact is connected to the free end of a leaf spring.

RESTRAINT TAPS

A set of restraint taps are located on the front of the relay near the polar unit. These taps are the maximum and minimum restraint taps of the relay.

INDICATING CONTACTOR SWITCH UNIT (ICS)

The d-c indicating contactor switch is a small clapper-type device. A magnetic armature, to which leaf-spring mounted contacts are attached, is attracted to the magnetic core upon energization of the switch. When the switch closes, the moving contacts bridge two stationary contacts, bypassing the main relay contacts. Also during this operation, two fin-

SUPERSEDES I.L. 41-971.2D
*Denotes change from superseded issue.

EFFECTIVE OCTOBER 1971

gers on the armature deflect a spring located on the front of the switch, which allows the operation indicator target to drop. The target is reset from the outside of the case by a push rod located at the bottom of the cover.

The front spring, in addition to holding the target, provides restraint for the armature, and thus controls the pick-up value of the switch.

OPERATION

The connection of the HCB system of relays to the protected transmission line is shown in Fig. 8. In such a connection, the relays operate for faults within the line terminals but not for faults external to the protected transmission line. This is accomplished by comparing the relative polarities of voltages at opposite ends of the transmission line by means of a metallic pilot wire.

As shown in Figure 8, the composite sequence filter of each HCB relay receives three phase current from the current transformers of the transmission line. The composite sequence filter of the HCB converts the three-phase current input into a single-phase voltage output, V_F, of a magnitude which is an adjustable function of the phase A positive and zero sequence current. This voltage, V_F, is impressed on the primary wiring of the saturating transformer. The saturating transformer output voltage, V_S, is applied to the relay coils and to the pilot wire through an insulating transformer. The saturating transformer and a neon lamp across its secondary winding serve to limit the energy input to the pilot wire.

During an external fault, assuming matched relays, the magnitude of V_S at both stations will be the same. The relative polarities of the V_S voltages will be as shown in Figure 4. Since the voltages add, most of the current will circulate through the restraint coils and the pilot wire, with a minimum of operating coil current. The relative effects of the operating and restraint coil currents are such that the relay is restrained.

During an internal fault, the relative V_S polarities reverse. Since the V_S voltages now oppose each other, most of the current flowing in the restraint coils is also forced through the operating coils with a minimum of current in the pilot wire. This increase in operating current overcomes the restraining effect and both the relays operate.

Within limits, as defined in Figure 7 and under "Characteristics," all the relays will operate for an internal fault regardless of the fault current distribution at the various stations. The nominal pickup (total internal fault current) of the relaying system is equal to the minimum trip of a single relay multiplied by the number of relays. For example, if the pickup of each relay, with the pilot wire open, is 6 amperes, a two terminal line system has a nominal pickup of 2 x 6 = 12 amperes.

PILOT WIRE EFFECTS

In Figure 4 it can be seen that a short-circuited pilot wire will short circuit the relay operating coils. Depending on the location of the short, at least one of the relays will fail to trip during an internal fault. If the pilot wire is open circuited, almost all the restraint coil current will flow through the operating coil and the relay operates as an over-current device.

Excessive pilot wire series impedance will approach an open-circuited condition and the relays will operate during external faults. Excessive pilot wire shunt capacitance will approach a short-circuited condition and the relays will not operate.

POLAR UNIT THEORY

The polar unit flux paths are shown in Figure 5. With balanced air gaps, the permanent magnet produces flux flowing in two paths, one through the front gaps and one through the rear gaps. This flux produces north and south poles, as shown. By turning the left shunt in, some of the flux is forced through the armature, making it a north pole. Thus, reducing the left-hand rear gap will produce a force tending to pull the armature to the right. Similarly, reducing the right-hand gap will produce a force tending to pull the armature to the left.

CHARACTERISTICS

The voltage, V_F, impressed by the filter upon the saturating transformer is:

$$V_F = 2I_{A1} R_1 + I_{A0} (R_1 + 3R_0) \text{ volts} \qquad (1)$$

where R_1 and R_0 are the positive and zero sequence tap values, respectively;

I_{A1} and I_{A0} are the positive and zero sequence phase A current inputs, respectively, in amperes. *These are vector quantities.*

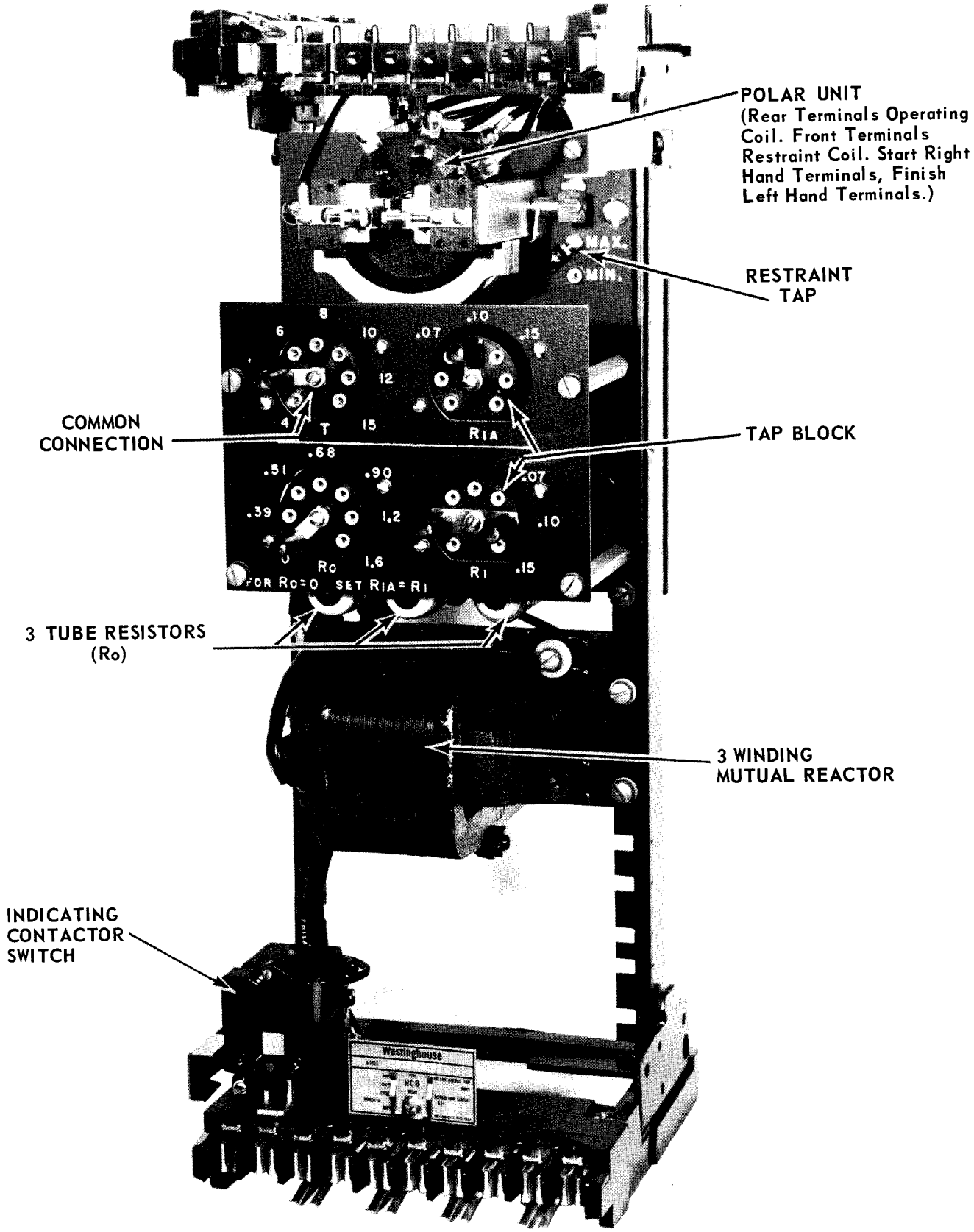

Fig. 1. Type HCB Relay Without Case (Front View).

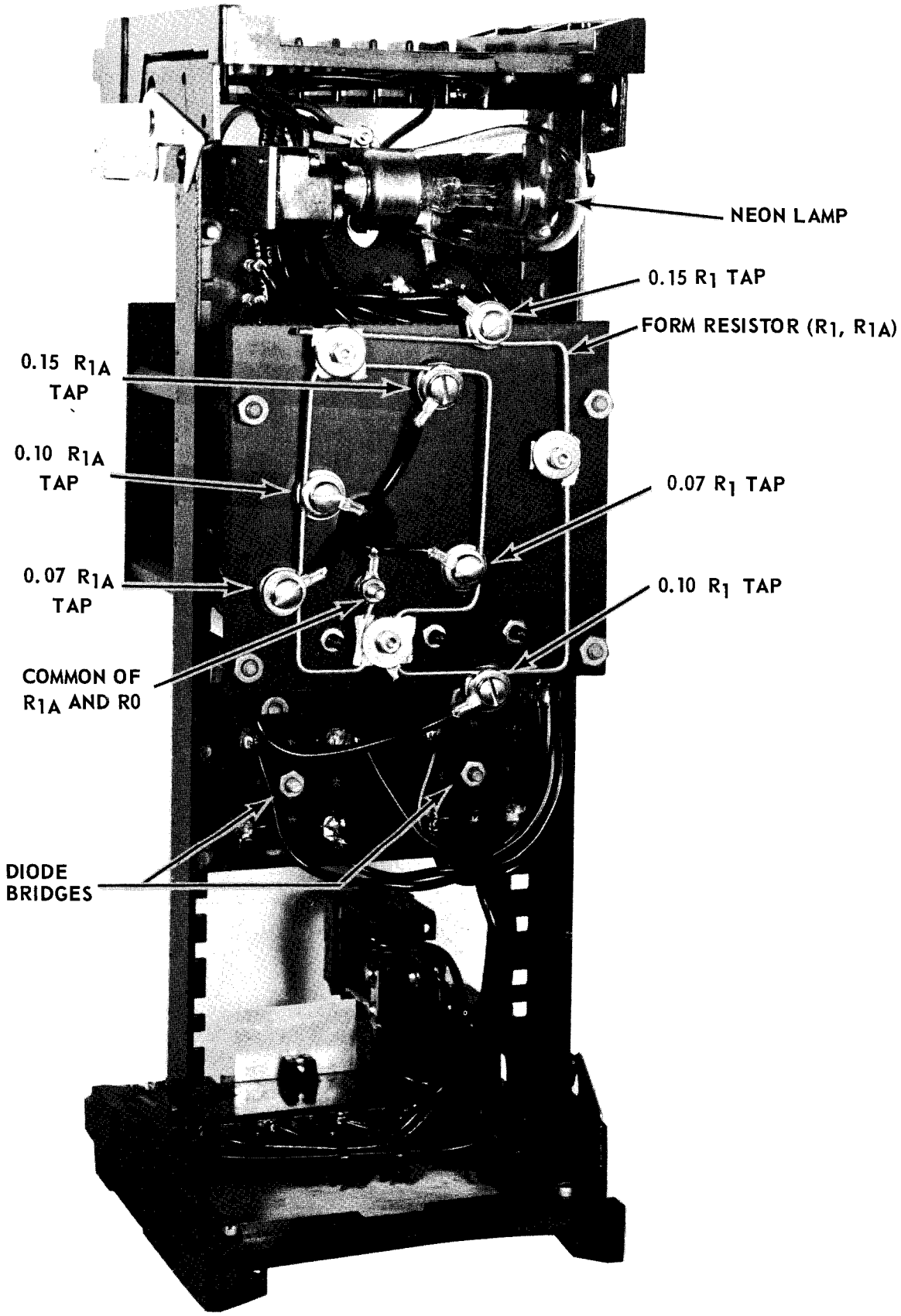

Fig. 2 Type HCB Relay Without Case (Rear View).

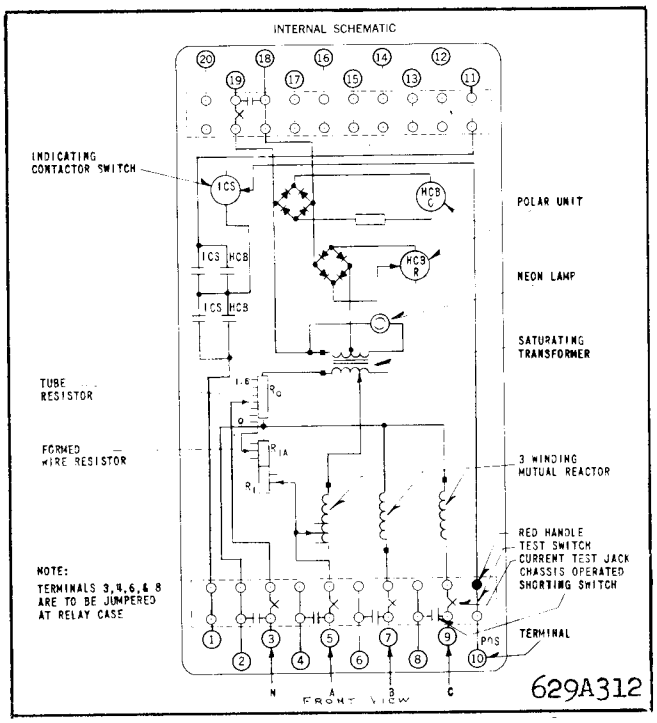

Fig. 3. Internal Schematic of the Type HCB Relay in FT-42 Case (Double Trip Circuit). For the Single Trip Relay the Circuits Associated with Terminal 11 are omitted.

SINGLE RELAY PICKUP (PILOT WIRE OPEN) I_S

Single relay pickup, I_S, is defined as the phase current required to operate one relay with the pilot wire side of the insulating transformer open circuited (H1-H4). The single relay pickup point in terms of filter voltage is:

$$V_F = 0.2T \tag{2}$$

where T is the saturating transformer tap value. Single relay pickup is defined by equating (1) & (2):

$$0.2T = 2\,I_{A1}\,R_1 + I_{A0}\,(R_1 + 3R_0) \tag{3}$$

Current I_S varies with the type of fault. For example, for a 3 phase fault, $I_S = I_{A1}$, since only positive sequence current is present. Substituting $I_S = I_{A1}$ in Eq. (3) & rearranging, the 3 phase fault pickup is:

$$I_S = I_{A1} = \frac{0.2T}{2\,R_1} = \frac{T}{10R_1} \quad \text{(3 phase fault)} \tag{4}$$

If $R_1 = 0.1$, $R_0 = 1.6$ & $T = 4$:

$$I_S = \frac{T}{10R_1} = \frac{4}{10X0.1} = 4 \text{ amp. (3 phase fault)}$$

For a phase A to ground fault, if $I_{A1} = I_{A2} = I_{A0}$ (I_{A2} is the phase A negative sequence current):

$$0.2T = 2I_{A1}\,R_1 + I_{A1}\,(R_1 + 3R_0)$$

$$I_{A1} = \frac{0.2T}{3(R_1 + R_0)} = I_{A0}$$

But: $I_S = I_{A1} + I_{A2} + I_{A0}$

$= 3I_{A1}$

So: $$I_S = 3I_{A1} = \frac{0.2T}{R_1 + R_0} \quad \text{(A-G fault)} \tag{5}$$

If $R_1 = 0.1$, $R_0 = 1.6$ & $T = 4$:

$$I_S = \frac{0.2T}{R_1 + R_0} = \frac{0.2x4}{0.1 + 1.6}$$

$$= \frac{0.8}{1.7} = 0.471 \text{ amp. (A-G fault)}$$

NOMINAL PICKUP (ALL RELAYS)

The nominal pickup, I_{nom}, is defined as

$$I_{nom} = KI_S \tag{6}$$

where I_{nom} = total internal fault current
K = number of relays (2 or 3)
I_S = single-relay pickup with pilot wire disconnected (see above)

For example, for a phase-A-to-ground fault, $I_{A1} = I_{A0}$ with the pilot wire open circuited, the single-relay pickup was previously determined as $I_{AG} = 0.471$ ampere. For a two-terminal line, the nominal pickup for a phase-A-to-ground fault ($R_1 = 0.1$; Ro = 1.6; T = 4) is:

$$I_{nom}\text{ (A to G)} = 0.471K = 0.471 \times 2 = 0.942 \text{ ampere.}$$

MINIMUM TRIP (ALL RELAYS)

With equal inputs to all relays and zero pilot-wire shunt capacitance, the relays will operate at their nominal pick-up point. The minimum trip points will vary somewhat from nominal value, depending on the pilot-wire constants and the magnitude and phase angle of the various relay input currents. For example, Figure 6 shows the relay operating points for a two-terminal line, assuming input current to the near relay only.

An example of the characteristics with various current distributions is shown in Figure 7. The filter

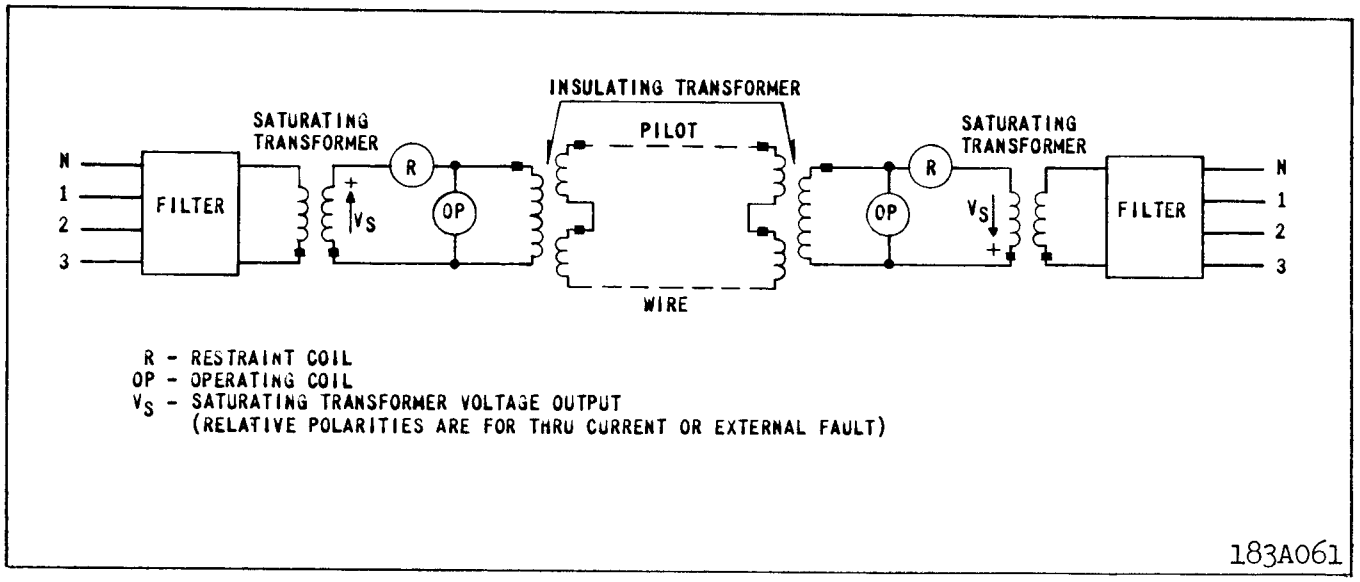

Fig. 4. Simplified External Schematic of the HCB Relay System.

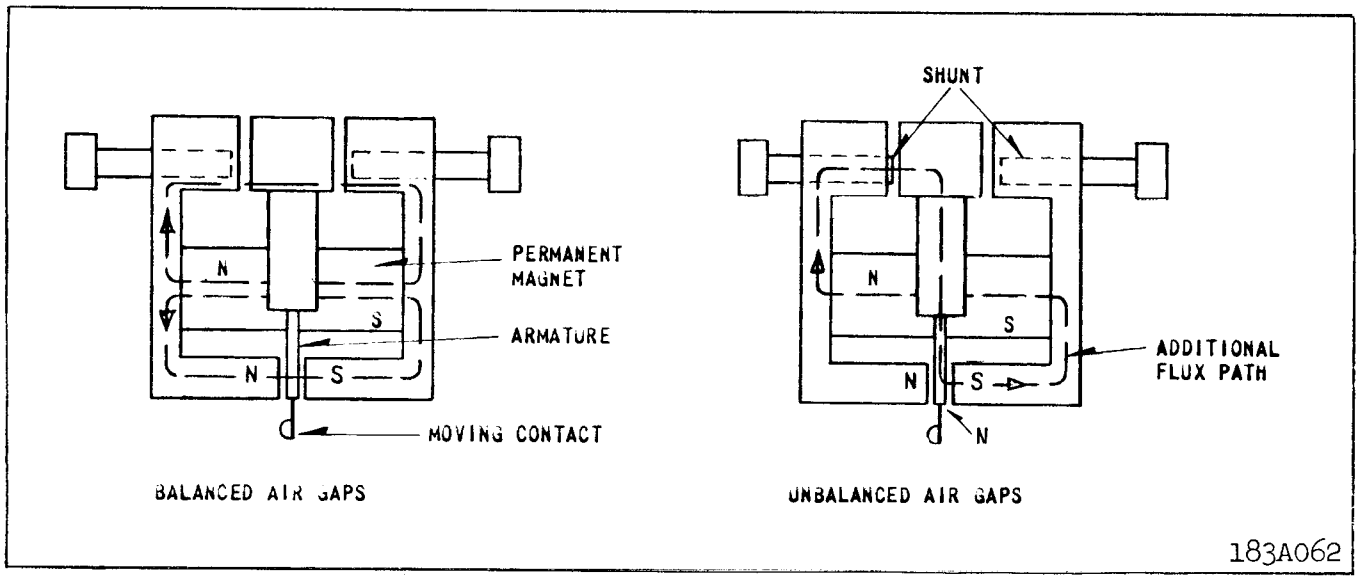

Fig. 5. Polar Unit Permanent Magnet Flux Paths.

output voltage, V_F, of each relay, as defined by equation (1) must be in phase or 180 degrees out of phase, in order for Figure 7 to apply.

INSULATING TRANSFORMER

Unless otherwise noted, all characteristics presented include an insulating transformer with each relay. Two ratios are available: 4/1 and 6/1. The high voltage side is connected to the pilot-wires.

PILOT-WIRE REQUIREMENTS

The relays should not be applied with pilot-wire series resistance or shunt capacitance exceeding the following values:

TABLE I

No. of Relays	Insulating Transformer Ratio			
	4/1		6/1	
	R_L	C_S	R_L	C_S
2	2000	1.5	—	—
3	500/LEG	1.8	1000/LEG	0.75

R_L = series loop resistance in ohms.

C_S = total shunt capacitance in microfarads.

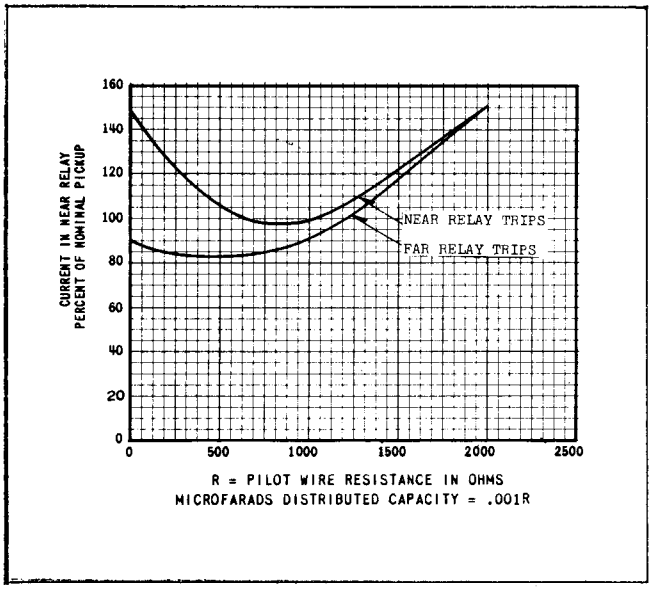

Fig. 6 Typical Curves Showing the Effect of the Pilot Wire on Minimum Trip Current, Two-Terminal Line (Maximum Restraint Tap). Insulating Transformer 4/1 ratio.

Where the shunt capacitance exceeds the above amount, it may be feasible in some cases to provide shunt reactors to compensate for the excessive capacitance. The amount of capacitance which can be compensated is limited and varies depending upon the magnitude of the pilot-wire distributed effect.

A shielded, twisted pilot wire pair, preferably of #19 AWG or larger, is recommended; however, open wires may be used if they are frequently transposed in areas of exposure to power circuit induction. The voltage impressed across either insulating transformer (H-1 to H-4) as a result of induction or a rise in station ground potential, should be less than 7.5 volts to prevent undesired relay operation.

For three-terminal applications, the loop resistance of all legs of the pilot wire must be balanced within 5 percent, with variable resistors as shown in Figure 8. The pilot wire resistance to be balanced is divided by 16 and 36 for the 4 to 1 and 6 to 1 ratio insulating transformers respectively, since the balancing resistors are located on the relay side of the insulating transformers.

Induced voltages and rises in station-ground potential may be handled by the following means:

a) Neutralizing reactors may be connected in series with the pilot wire to hold the pilot wire potential close to the remote ground potential in the presence of a rise in station-ground potential. They do not limit pilot-wire voltages to safe values in the presence of a longitudinal induced voltage. When using the neutralizing reactor, the pilot-wire sheath should be insulated from station ground to minimize sheath-to-pair potential in the presence of a rise in station-ground potential. All other pairs in the cable which are connected to station ground should also be protected with neutralizing reactors to minimize pair-to-pair voltages.

b) Drainage reactors may be connected across the pilot wire and to ground through a KX642 protector tube. The drainage reactor is particularly effective in limiting pair-to-ground voltage in the presence of an induced voltage. When the tube flashes, both wires are connected to ground through the drainage reactor windings which offer a low impedance to ground but maintain a high impedance to an a-c voltage across the wires. Thus, the HCB system will operate normally even though the protector tube has flashed over. The drainage reactor is not intended to handle a rise in ground potential.

c) The neutralizing and drainage reactors may be utilized together. If the neutralizing reactor is to be of any value, the drainage reactor through the KX642 protector tube must be connected to remote ground.

For information with reference to the insulation and protection equipment, refer to I.L. 41-971.4.

TRIP CIRCUIT

The main contacts will safely close 30 amperes at 250 volts d.c., and the seal-in contacts of the indicating contactor switch will safely carry this current long enough to trip a circuit breaker.

The indicating contactor switch has two taps that provide a pick-up setting of 0.2 or 2 amperes. To change taps requires connecting the lead located in front of the tap block to the desired setting by means of a screw connection.

SETTINGS

There are four settings in the relay. The correct tap setting should be determined as outlined under "Setting Calculations".

1) Restraint taps-maximum or minimum
   To change taps, connect the lead in front of the relay to the correct tap.

2) T tap- 4, 5, 6, 8, 10, 12, and 15
   To change taps, loosen center screw and move tap link to desired setting. Tap screw and center screw to be tight after tap change is made.

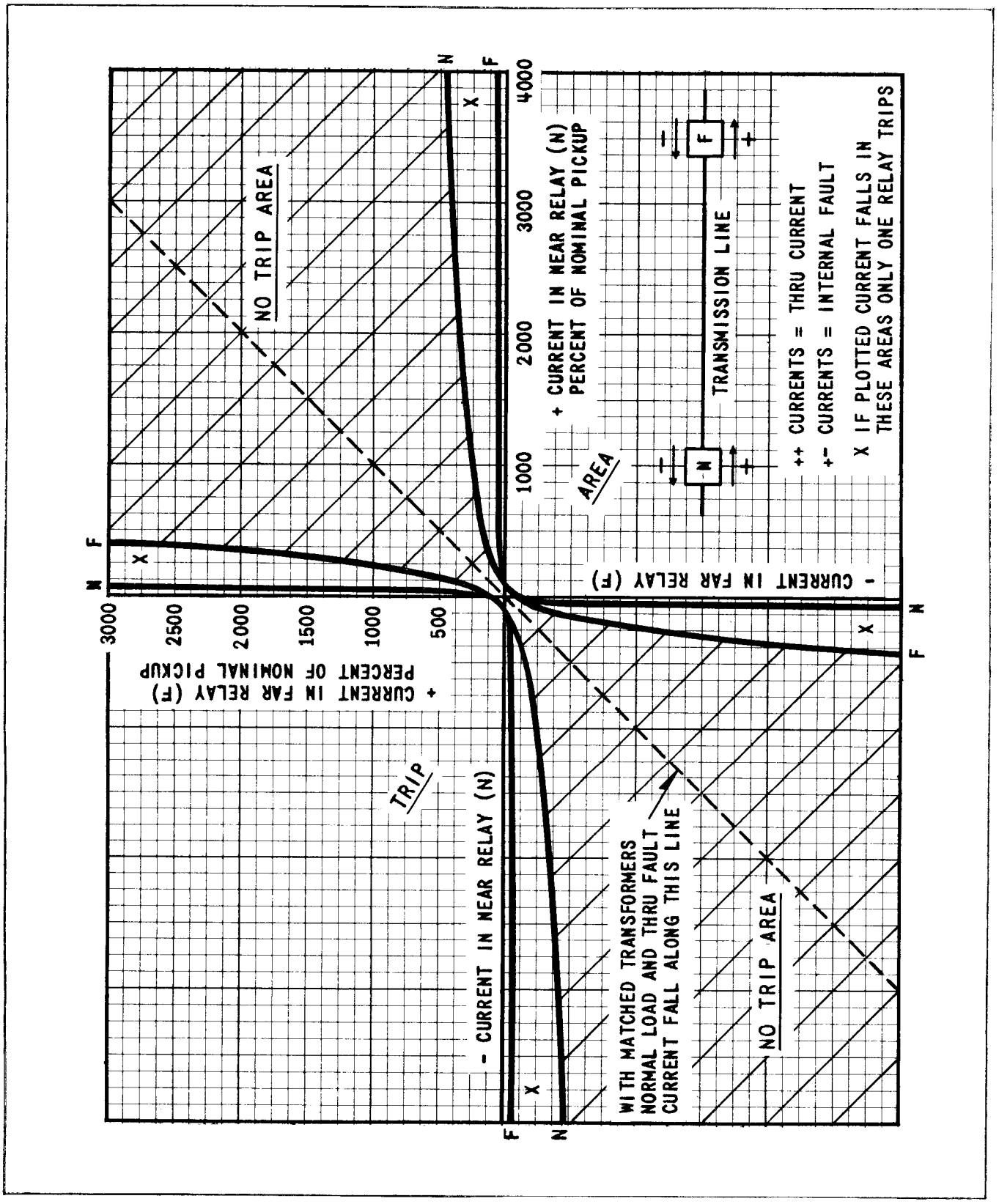

Fig. 7 Typical Operating Characteristics of the HCB Relay System — Maximum Restraint Tap, with 4/1 Insulating Transformers and 2000-Ohm Pilot Wire. V_F of Near and Far Relays in Phase or 180° Out of Phase.

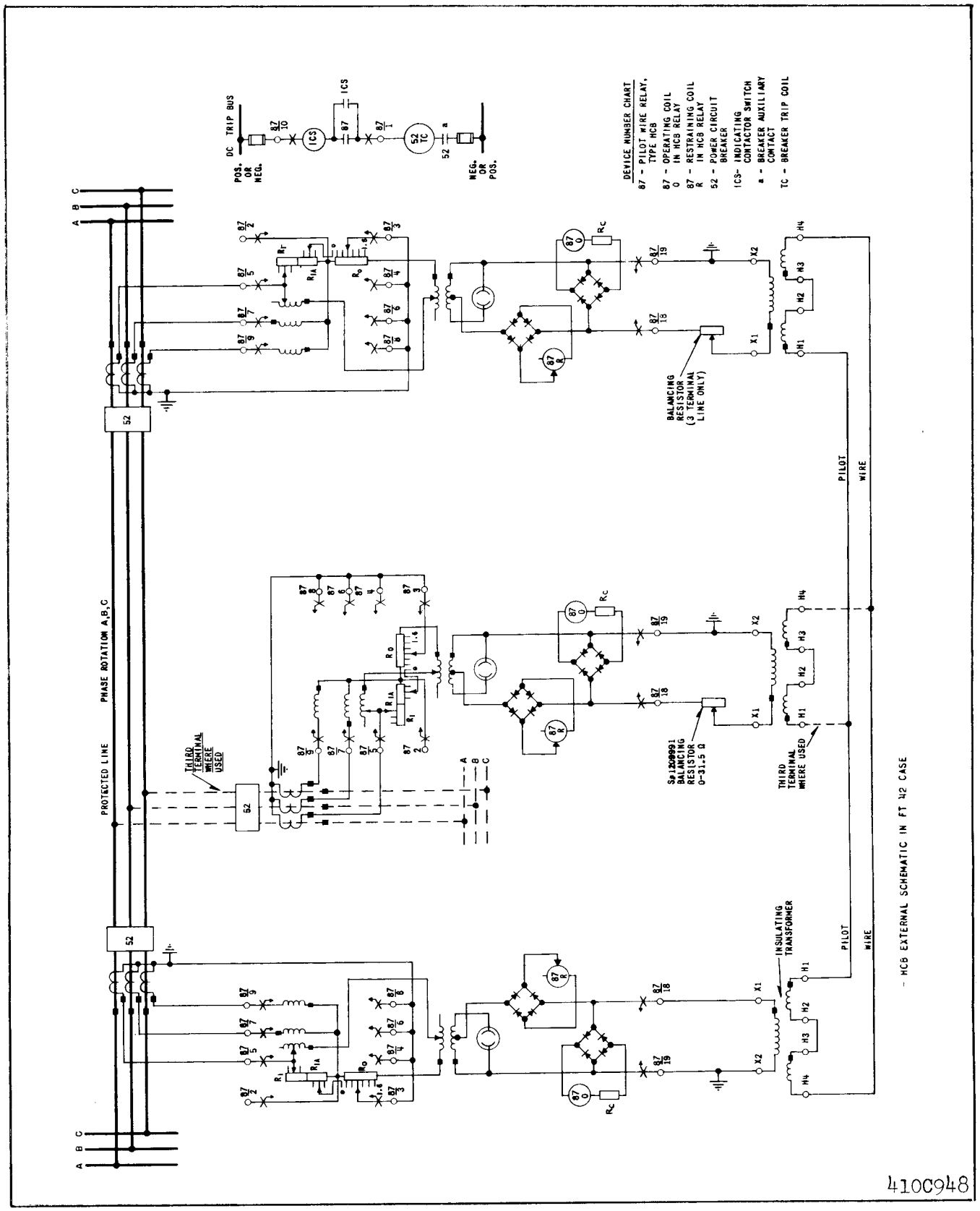

Fig. 8. External Schematic of the Type HCB Relay in FT-42 Case - Two- or Three-Terminal Line.

3) R_1 tap- 0.07, 0.10, 0.15
To change taps, loosen center screw and move tap link to desired setting. Insert two tap screws at each end of the tap link and tighten center screw as well as two tap screws.

4) Ro tap– 0.39, 0.51, 0.68, 0.90, 1.2 and 1.6
To change taps, loosen center screw and move tap link to desired tap. Tap screw and center screw to be tight after tap change is made.

5) R_{1A} Taps – (0.07, 0.10, 0.15)
Note: It is recommended that these taps be set in the same tap as the R_1 tap for all applications.

To change taps, loosen center screw and move tap link to desired tap. Tap screw and center screw to be tight after tap change is made.

INDICATING CONTACTOR SWITCH (ICS)

The only setting required on the ICS is the selection of the 0.2 or 2.0 ampere tap setting. This selection is made by connecting the lead located in front of the tap block to the desired setting by means of the connecting screw.

SETTING CALCULATIONS

The HCB relay has four sets of taps: R_1, T, R_0, and restraint taps. The following discussion establishes limits for the various tap settings under different operating conditions. It should be kept in mind that settings to obtain operation on minimum internal fault conditions are based on the total fault current that flows into the protected line from all terminals.

TERMS

R_1, T, R_0 – Relay taps

I_{3p} – total minimum internal 3-phase secondary fault current fed from all terminals. divided by the number of terminals (2 or 3)

I_L – maximum secondary load current flowing through the protected line.

I_g – total minimum secondary ground fault current fed into the protected line from all terminals, divided by the number of terminals.

$I_{nom.}$(P-P) – nominal internal phase to phase fault sensitivity.

$I_{nom.}$(P-G) – nominal internal line to ground fault sensitivity.

R_{Nc} (I), R_{Nc} (II) – current transformer ratio at Station I and II respectively.

PHASE FAULT SENSITIVITY (R_1 and T Taps)

The phase fault pickup is determined by the R_1 and T taps. In order to operate on the minimum line-to-line fault current, the R_1 and T taps should be set for not more than:

$$\frac{T}{R_1} = 5I_{3P} \qquad (7)$$

In order to prevent operation on load current if the pilot wires become open circuited, the R_1 and T taps should be set for not less than:

$$\frac{T}{R_1} = 10I_L \qquad (8)$$

The available taps are:

R_1: 0.07, 0.10, and 0.15

T : 4, 5, 6, 8, 10, 12, and 15

Where sufficient fault current is available, it is recommended that the relays be set as follows:

$$\frac{T}{R_1} = 1.25 \times 10I_L = 12.5I_L \qquad (9)$$

The required T/R_1 ratio may be obtained by any combination of T and R_1. However, the T tap must be set the same at all stations. The R_1 taps may be utilized to compensate for different CT ratios with two-terminal lines if the pilot-wire loop resistance is 1000 ohms or less. Auxiliary CT's and identical R_1 tap settings must be used with different main CT ratios on all three-terminal lines and on two-terminal lines with more than 1000 ohms loop resistance in the pilot wire.

GROUND FAULT SENSITIVITY (R_0 Tap)

The ground fault pickup is determined by R_0 and T taps. (T should be determined by the phase setting.) In order to operate on the minimum line-to-ground fault current, the R_0 tap setting should be not less than:

$$R_0 = \frac{0.2T}{I_g} \qquad (10)$$

The available R_0 taps are: 0.39, 0.51, 0.68, 0.90, 1.2, and 1.6.

For overhead lines, it is recommended that the 1.6 R_0 tap be used to obtain maximum sensitivity.

For cable circuits, where the line charging current exceeds 5% of nominal pickup current, set R_0 for about:

$$R_0 = \frac{T}{7.5}$$

The R_0 taps at each line terminal should be set in the same proportion as the R_1 taps. (See phase fault sensitivity.)

R_{1A} TAPS

The R_{1A} taps, 0.07, 0.10, and 0.15, are utilized to set $R_0 = 1/3\ R_1$, where no zero sequence sensitivity is desired. Equation (10) does not apply for these three taps. These taps are used where R_0 is set in 0. For all other settings of R_0, the R_{1A} taps are automatically bypassed.

RESTRAINT TAP (Max. and Min.)

Set in maximum restraint tap for all two-terminal lines. Set in minimum restraint tap for all three-terminal lines. The use of maximum restraint on two terminal applications allows the relay to be used for all pilot wires as indicated in Table I. The use of minimum restraint on three terminal applications compensates for the desensitizing effect of a third terminal.

Note: The relay pick up will change by approximately 5% between setting in max. and min. restraint taps. Relay is shipped calibrated in the max. restraint tap. If set in min. restraint tap, calibrating will change. See "Adjustments and Maintenance" for re-calibration procedure.

TAPPED LOADS

Where one transformer bank is tapped to a line protected with two HCB relays, the critical point is to set above the fault current flow for a fault on the other side of the bank. Set the R_1 and T taps for not less than:

$$\frac{T}{R_1} = 5I_{3PL} \qquad (11)$$

where I_{3PL} = total current for a 3-phase fault on the low side of the bank.

Note that the tapped bank must not act as a ground source for high-side faults (e.g. high side connected in delta). Ordinarily this means that the R_0 tap settings need not be changed, since no zero-sequence current flows in the line when the low side is grounded.

SETTING EXAMPLE

CASE I

Assume:

Two-terminal line.

CT ratio =	600/5
Full-load current = I_L =	400A
Minimum 3-phase internal fault current:	
Through Station I =	1500A
Through Station II =	2500A
Minimum internal line-to-ground fault current:	
Through Station I =	400A
Through Station II =	0

Phase fault pickup:

$$\frac{T}{R_1}\text{(maximum)} = 5I_{3P} = 5 \times \frac{1500 + 2500}{2} \times \frac{5}{600} = 83.3$$

$$\frac{T}{R_1}\text{(maximum)} = 10I_L = 10 \times 400 \times \frac{5}{600} = 33.3$$

The phase fault current is sufficient to allow the relay to be set to prevent tripping on an open-circuited pilot wire. Therefore, set:

$$\frac{T}{R_1} = 12.5I_L = 41.7.$$

Set both relays for: $T = 4$, $R_1 = 0.1$.

The nominal pick-up current from equation 6 for a phase-to-phase fault is:

$$I_{nom}(P\text{-}P) = \frac{T}{2.89R_1} = \frac{4}{0.289} = 13.8 \text{ amperes,}$$

$$\left[I_{nom}(P\text{-}P) = \frac{T}{1.92R_1} \text{ for three-terminal lines}\right]$$

Ground fault pickup:

$$R_0\text{ (minimum)} = \frac{0.2T}{I_g} = \frac{0.2 \times 4}{400/2} \times \frac{600}{5} = 0.48$$

An R_0 tap exceeding 0.48 will provide tripping. As recommended for overhead lines:

Set $R_0 = 1.6$.

The ground fault nominal pickup is:

$$I_{nom}(P\text{-}G) = \frac{0.4T}{R_0 + R_1} = \frac{1.6}{1.6} = 1.0 \text{ ampere,}$$

$$\left[I_{nom}(P\text{-}G) = \frac{0.6T}{R_0 + R_1} \text{ for three-terminal lines}\right]$$

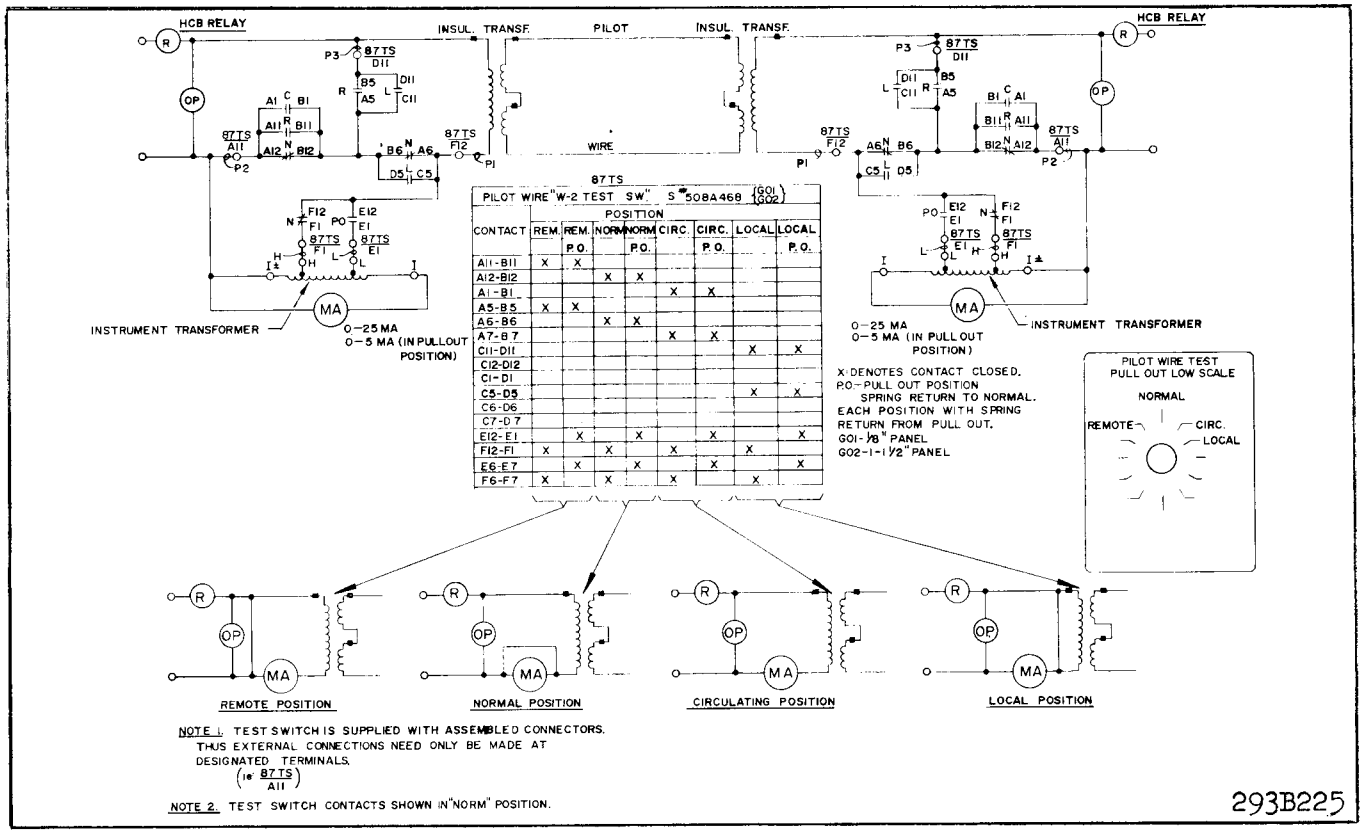

Fig. 9. HCB Relay Test Circuits with S#508A468601-G02 Type W-2 Switch and S#291B318A09 Milliammeter 0- 5-25 ma.

Restraint tap.

Use maximum restraint tap.

CASE II (DIFFERENT CT RATIOS)

Assume 400/5 CT's at Station II and 600/5 CT's at Station I, with less than 1000 ohms pilot wire loop resistance.

At Station I, set $R_O = 1.6$ as in Case I. However, set $R_1 = 0.15$ to obtain R_1 settings proportional to the CT ratio. From equation 9:

$$T = 12.5 R_1 I_L = 12.5 \times 0.15 \times 400 \times \frac{5}{600} = 6.25$$

Set T = 8

Station II settings are:

T = 8 (Same as Station I)

$$R_1 = 0.15 \frac{R_{Nc}(II)}{R_{Nc}(I)} 0.15 \times \frac{400}{600} = 0.10$$

$$R_O = 1.6 \times \frac{400}{600} = 1.07 \text{ (Set 1.2)}$$

INSTALLATION

The relays should be mounted on switchboard panels or their equivalent in a location free from dirt, moisture, excessive vibration, and heat. Mount the relay vertically by means of the four mounting holes on the flange for semi-flush mounting, or by means of the rear mounting stud or studs for projection mounting. Either a mounting stud or the mounting screws may be utilized for grounding the relay. The electrical connections may be made directly to the terminals by means of screws for steel panel mounting or to the terminal studs furnished with the relay for thick panel mounting. The terminals studs may be easily removed or inserted by locking two nuts on the stud and then turning the proper nut with a wrench.

For detailed Flexitest case information, refer to I.L. 41-076.

ADJUSTMENTS AND MAINTENANCE

CAUTION *Make sure that the neon lamp is in place whenever relay operation is being checked.*

ACCEPTANCE TESTS

The following tests are recommended when the relay is received from the factory.

Main Unit

Connect the relay to the insulating transformer, as shown in Figure 8, and set $R_1 = 0.10$, $R_0 = 1.6$, $T = 4$, and maximum restraint tap. With the insulating transformer terminals H1 and H4 open circuited, measure the minimum pick-up current, I_{79} (min.), with current applied through terminals 7 and 9. This value should not be greater than:

7.28 amperes.

NOTE: The relay may operate at values of current lower than 7.28 amperes depending upon the insulating transformer used and the prior history of the polar unit. The pickup should not be lower than 4.8 amperes. To increase pickup, short H_1-H_4 of insulating transformer, apply 40 amperes momentarily to terminals 3 and 5 of relay and check pickup of relay. Should be between 6.9 to 7.0 amperes. If not, the polar unit should be recalibrated per "polar unit calibration."

Now, connect a resistance, R_{PW}, across H1 and H4 of the insulating transformer, with a 10-mfd capacitor connected between H2 and H3. Connect a capacitor, C_{PW}, in parallel with R_{PW}. With R_{PW} and C_{PW} set as specified in Table II suddenly apply $I_{35} = 30$ amperes (through terminals 3 and 5).

TABLE II

Rpw Test - Max. Restraint Tap

$R_1 = 0.10$, $R_0 = 1.6$, $T = 4$

Insulating Transformer Ratio	R_{PW} † in ohms		C_{PW} in microfarads
4 to 1	1200	1900	0.75
6 to 1	2700	4300	0.33

† The relay should not operate at the lower value of Rpw, but should operate at the higher value.

Additional tests for the sequence filter and the operating unit are described under "Calibration Check." These latter tests are not required unless the relay fails to meet the acceptance tests.

Indicating Contactor Switch (ICS)

Close the main relay contacts and pass sufficient direct current through the trip circuit to close the contacts of the ICS. This value of current should not be greater than the particular ICS tap setting being used. The indicator target should drop freely.

CALIBRATION CHECK

The following tests are recommended whenever a check on the relay calibration is desired.

Over-all Relay Check

Over-all calibration can be checked by the procedure described under "Acceptance Tests." If the relay has been re-calibrated in the minimum restraint tap (factory calibration is made in the maximum restraint tap), the R_{PW} test should be made in accordance with Table III instead of Table II.

TABLE III

Rpw Test - Min. Restraint Tap

$R_1 = 0.10$, $R_0 = 1.6$, $T = 4$

Insulating Transformer Ratio	R_{PW} † in ohms		C_{PW} in microfarads
4 to 1	800	1400	0.75
6 to 1	1800	3100	0.33

† The relay should not operate at the lower value of Rpw, but should operate at the higher value.

Sequence Filter: Remove tap screw T and connect a high-resistance voltmeter across this open-circuited point by connecting to the tap plate and to one of the saturating transformer taps at the rear of the tap block. Energize the relay with $I_{79} = 6.94$ amperes (terminals 7 and 9). The measured open-circuit voltage, V_F, should be:

$$V_F = 8R_1 \pm 5\% \text{ volts.}$$

(e.g., if $R_1 = 0.1$, $V_F = 8 \times 0.1 = 0.8$ volt.)

Repeat this voltage measurement with $I_{59} = 6.94$ amperes.

Operating Unit: The following test will check the polar unit calibration and the performance of the rectifiers. Connect a variable non-inductive resistor across the high-voltage terminals of the insulating transformer (H1 to H4), and connect d-c milliammeters in series with the operating and restraining coils of the polar unit by opening these circuits. (The restraint can be opened at the tap circuit for max. and min. restraint. The operating circuit has to be opened at the polar unit.) These milliammeters should have

low resistance and should be capable of reading in the order of 20 to 25 ma in the operating coil and 100 to 150 ma in the restraining circuit. Using T = 4, R_1 = 0.1, R_0 = 1.6, energize the relay with I_{35} = 10 amperes (terminals 3 and 5) and increase the variable resistance across the insulating transformer high-voltage terminals until the relay just trips. The values obtained should conform substantially to the following equations:

For minimum restraint

$$I_0 = 0.12\ I_R + 8$$

For maximum restraint

$$I_0 = 0.16\ I_R + 8$$

where I_0 and I_R are operating and restraining coil coil currents, respectively, in milliamperes. The results are subject to variations between individual relays, due to different exciting impedances of the insulating transformers. However, the value should never be lower than:

For minimum restraint

$$I_0 = 0.12\ I_R + 4$$

For maximum restraint

$$I_0 = 0.16 I_R + 4$$

CALIBRATION PROCEDURE

If the factory calibration has been disturbed, the following procedure should be followed to recalibrate the relay.

FILTER CALIBRATION

A. R_1 Taps

1. Disconnect T current tap link and place Ro tap in 1.6
2. Connect voltmeter (low-reading, high resistance rectox) across relay terminal 2 and the common of T tap block.
3. Pass 5 amperes a.c. into terminal 5 and out terminal 9 of the relay.
4. Adjust the corresponding R_1 slide wire position (see Fig. 2 for location) to be within limits of following table for each specified setting of R_1 tap screw.

R_1 Tap Setting	Volts A.C.
.15	0.865 ± .008
.10	0.577 ± .007
.07	0.433 ± .005

B. R_{1A} Taps

1. Disconnect T current tap link and set Ro in O tap.
2. Connect a.c. voltmeter across relay terminal 3 and the common connection of R_{1A} and Ro (see Fig. 2 for location).
3. Pass 5 amperes a.c. into terminals 5 and out terminal 9 of the relay.
4. Adjust the corresponding R_{1A} slide wire position (see fig. 2 for location) to within limits of following table for each specified setting of R_{1A} Tap screw

R_{1A} Tap Setting	Volts A.C.
.15	0.250 ± .005
.10	0.167 ± .003
.07	0.125 = .003

C. Ro Taps

No adjustments can be made on the Ro resistors. Value of resistance can be checked by passing 5 amperes a.c. through terminal 3 and out terminal 9. T tap must be disconnected. Following voltages should be measured across terminal 2 and the specified tap of Ro.

Ro Tap Setting	Volts A.C.
.39	1.85 to 2.05
.51	2.45 to 2.68
.68	3.28 to 3.60
.90	4.33 to 4.70
1.20	5.78 to 6.27
1.60	7.72 to 8.38

Polar Unit Contact Adjustment: Place a 0.065 to 0.072 inch feeler gage between the right hand pole face and the armature. This gap should be measured near the front of the right hand pole face. Bring up the back-stop screw until it just makes with the moving contact. Place a 0.030 to 0.045 feeler gage between the moving contact and the stationary contact on the left-hand side of the polar unit. Bring up the stationary contact until it just makes with the gage and lock in place. For relays with double contacts make sure that both upper and lower contacts make at the same time.

Polar Unit Calibration: Connect the restraint tap link in the position in which it will be used. Connect terminals X1 and X2 of the insulating transformer across the pilot-wire terminals of the relay. Connect the relay taps on T = 4, R_1 = 0.1, R_0 = 1.6.

The sensitivity of the polar unit is adjusted by means of two magnetic, screw type shunts at the rear of the element. Looking at the relay front view, turning out the right hand shunt decreases the amount of current required to close to the right hand stop. Conversely, drawing out the left hand shunt decreases the amount required to trip the relay. In general, the farther out the shunt screws are turned, the greater the toggle action will be and as a result, the dropout current will be lower. In adjusting the polar elements, be sure that a definite toggle action is obtained, rather than a gradual movement of the armature.

Start with both shunt out 4 to 5 turns. Short out the pilot wire on the high side of the insulating transformer. Momentarily apply 40 amperes from terminals 5 to 3. Now remove the short from H1 to H4 and, adjust the right hand shunt such that the contacts close with a positive snappy toggle action at I_{79} = 6.9 to 7.0 amperes. After this adjustment is complete, short out pilot wire and apply 40 amperes momentarily from terminals 5 to 3. Now remove the short from H1 to H4 and, check pickup for I_{79}. If value has changed from before, it will be necessary to re-adjust the right hand shunt. Several trials may be necessary before the pickup will be constant. In each case, the 40 amperes should be applied before any additional adjustments are performed on the shunt.

After the shunts have been adjusted, apply 40 amperes momentarily to terminals 3 and 5 of the relay with the pilot wire open. Pickup will be approximately 5 amperes with current applied to terminals 7 and 9. This change in pickup is due to a change in the residual magnetism in the polar unit of the relay. In the de-energized state, the permanent magnet of this unit produces a flux or magnetic bias to keep the contacts open. When the unit is energized, a second flux (electrical) is produced which either adds to or substracts from the magnetic flux. When the electrical flux is removed, the magnetic structure of the polar unit is changed. Hence, the flux produced by an excess of restraint current, adds to the magnetic bias, and the flux produced by an excess of operating current substracts from the magnetic bias. This characteristic is inherent in the polar unit and has no affect on the overall performance of the relay.

After the shunt adjustment has been made, change the input current connections to terminals 3 and 5. Apply 40 amperes with H1 and H4 terminals shorted. Remove short and measure pickup with current applied to terminals 3 and 5. The relay should trip with I_{35} = 0.45 to 0.55 amperes.

ROUTINE MAINTENANCE

Contacts: All contacts should be cleaned periodically. A contact burnisher, S#182A836H01, is recommended for this purpose. The use of abrasive material for cleaning is not recommended, because of the danger of embedding small particles in the face of the soft silver and thus impairing the contact.

ICS Unit: Close the main relay contacts and pass sufficient direct current through the trip circuit to close the contacts of the ICS. This value of current should not be greater than the particular ICS tap setting being used. The indicator target should drop freely.

Operating Unit: Check the relay minimum pickup, with the pilot wires disconnected from terminals H1 and H4 of the insulating transformer, by energizing with I_{79} current (terminals 7 and 9). Pick-up current should be:

$$I_{79}\,(\text{min}) = \frac{T}{5.77\ R_1} \pm 5\%\ \text{amperes}$$

Additional tests are recommended with the pilot wire connected as described under "Complete System Test."

COMPLETE SYSTEM TEST

At the time of the initial installation and at subsequent maintenance periods, it is recommended that the following relay system checks be made, with the pilot wire connected.

MINIMUM PICKUP

PRECAUTION: In making this test with the relay in place on the switchboard, it is necessary to connect the load box in the circuit between the relay and the "hot" side of the supply circuit. If this precaution is not observed, it is possible to cause a short circuit between the grounded station service supply circuit and the ground of the current transformer circuit.

The minimum pickup of each relay should be checked before starting the system tests. With taps as specified in Fig. 10, and the pilot wire circuit open on the high side of the insulating transformer, each relay should trip with I_{AN} = 0.45 to 0.55 amp. or with I_{BC} = 6.9 to 7.0 amperes

With the pilot wire connected, energize one relay with I_{AN} and determine the minimum pick-up of all relays. Repeat this test by energizing the other relay or relays. Record these values for future reference. If the neon lamp is lit during these tests, the pilot circuit is presenting too high a shunting effect on the relays.

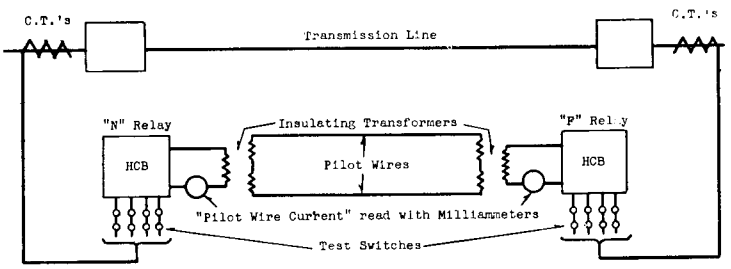

Note: The line should be carrying through load current amounting to at least 1.5 amperes as measured in the secondary of the Current Transformers. This test is based on the ratio of the C.T.'s being the same at each end of the line, in which case set the taps of both relays to $R_1 = .1$; $R_0 = 1.6$; $T = 4$ for this test.

	RELAY "N"					RELAY "F"				
Test No.	Test Switch	Relay Current	Relay Trip	"Pilot Wire Current" Circulating	"Pilot Wire Current" Remote	Test Switch	Relay Current	Relay Trip	"Pilot Wire Current" Circulating	"Pilot Wire Current" Remote
1		A,B,C,N	No	(1)	(1)		A,B,C,N	No	(1)	(1)
2		A,C,B,N	No	(2)	(2)		A,C,B,N	No	(2)	(2)
3		A,N	Yes	(3)	(0)		O	Yes	(3)	(3) (4)
4		O	Yes	(3)	(3) (4)		A,N	Yes	(3)	None
5		A,N	No	(3)	(3)		A,N	No	(3)	(3)
6		A,N	Yes	(6)			B,C,N	Yes	(6)	

REMARKS

Tests 1 and 2 are to check normal positive sequence rotation of phases.
Tests 3 and 4 simulate internal Phase A to Ground fault with single end feed.
Test 5 simulates an external Phase A to Ground fault. (5)
Test 6 simulates an internal Phase A to Ground fault, with equal feed from the two ends, since $I_B + I_C = - I_A$, with balanced load.

LEGEND OF TEST SWITCH SYMBOLS:

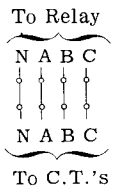

Normal Connection. All Currents to Relay.

EXAMPLE

Phase A current from C. T.'s to Relay. Phase B and C. T.'s shorted to neutral.

(1) The "pilot wire current" will vary depending upon the magnitude of the through load current and the characteristics of the pilot wire. See Figures 11 and 12.
(2) Since the relay is temporarily connected for negative sequence, it should have practically zero output in this test.
(3) These readings may be "off scale" depending upon the magnitude of the load current.
(4) The relay at this station should reset when the "far" current is being read because the local relay will be receiving no current from either the pilot wire or the current transformers.
(5) Test 4 and 5 can be repeated using phase B to neutral current, and again with phase C to neutral current, but this is not strictly necessary on the basis that, having proved the phase sequence with tests 1 and 2, and having proved the correspondence of phase A at the two ends of the line with test 5, then phases B and C must be correct.
(6) Some pilot wire current will be read, depending upon the magnitude of the distributed capacity of the pilot wire in combination with the magnetizing impedance of the insulating transformer.

Fig. 10. HCB Relay System Testing Procedure.

INTERPRETATION OF TESTS

1. Tests #1 and #2, Figure 10, are designed to indicate that the relays have been wired with the correct phase rotation. When the phase rotation is deliberately and temporarily changed by test #2, then the pilot-wire currents should be substantially zero. Any small value of pilot wire current which appears may be due to either a small unbalance in the load current, or else due to harmonic currents flowing through the line. If either relay has inadvertently been connected for the wrong phase rotation, then the fact will be apparent when reading local current. Local current should be interpreted from Figure 13, with the amount of load current which is present. If no current is read on test #1 for the local relay, and if current for test #2 is in line with Figure 13, then it is an indication that that particular relay has been connected for the wrong phase rotation.

a. In the event the pilot wire is open-circuited, the apparent circulating current will be quite low, being limited to the magnetizing current of the insulating transformer. Also, it will not be possible to read current from the remote end.

b. If the pilot wire is short-circuited, then the circulating current will be near normal, but it will not be possible to read current from the remote end.

2. If the pilot wire is reversed, (a) the circulating current will be low on test #1, but it will be possible to read pilot-wire current from the remote relay. (b) Both relays will trip on test #5. If the monitoring relays also suffer from this error in connection, then the error should be corrected at one relay location by reversing the connections to the H_1-H_4 terminals of the insulating transformer. However, if the monitoring relays do not suffer from this error, then the polarity of the pilot wires insofar as the HCB relay installation is concerned may be suitably corrected by making a reversal of connections either at the X_1-X_2 terminals of one insulating transformer, or at the output terminals of the relay, #18 and #19, Figure 3.

3. If the phases are rolled at one end of the line, then this will be picked up by test #5. On test #5, neither relay should trip when phase-A-to-neutral current is delivered to each of the two relays with the switching arrangement as shown and discussed. However, if one or both relays trip, then try checking the near relay, phase-A-to-neutral current, against phase-B-to-neutral current at the far relay. Also, check phase-A-to-neutral current at the near relay against phase-C-to-neutral current at the far relay. If, for example, neither relay trips when phase-A-to-neutral current is used for the near relay and phase-B-to-neutral current is used at the far relay, then it is an indication that what had been thought to be phase B current at the far location really identifies with phase A current at the near location. This identifies a rolled-phase condition, and also indicates the correction which must be made in the connections of the current transformer input to the relay.

4. One combination of errors which is somewhat tricky to pick up is the combination of pilot wires reversed plus a rolled-phase condition at one end. Let it be assumed that the pilot wire is reversed at the far end, making an error of 180 degrees. Then let it be assumed that the phases are also rolled by 120 degrees, thereby adding another error of 120 degrees. Adding these two together brings the total up to 300 degrees, which is within 60 degrees of what would be normal. Because of this, the only symptom which will appear in the first four tests is that the circulating current is likely to be lower than one would expect when read at one end or the other on test #1. However, test #5 may be used to identify this combination of errors. When the condition exists as described, when test #5 is extended to check phase A current at the near end against each of the three currents at the far end in turn, it will be found that at least one of the two relays will always trip. If this condition is found, reverse the pilot-wire connection, check out the rolled-phase condition and correct it, and then proceed with all six tests.

5. Test #6 is a final verification test.

Fig. 10 (continued)

LOADED CIRCUIT TEST

In performing these tests, the following procedure should be used.

1. Standard testing equipment is recommended for permanent installation with the relays as shown in Fig. 9. If this equipment is not available, a similar portable test should be set up using a low-resistance-a-c milliammeter.
2. Red-handle flexitest case switch should be open to interrupt the breaker trip circuit.
3. A test crew is necessary at each substation with a means of communication between them.
4. When the test calls for delivering only specified currents to the relay, it is necessary to use a thin piece of insulating material in the ammeter test jack. For example, test #5 of Fig. 10 relay "N". To apply phase A to N current to the near relay only, the switches associated with terminals 6, 7, 8, 9 of figure 3 must be open. Opening switches 6 and 8 short circuits the current transformers for phases B and C. **However, it is also necessary to insert the insulating material in the ammeter test jacks associated with terminals 7 and 9 in order to break up the connection between the filter in the relay chassis and the grounded input circuits from current transformers in phases B and C.**
5. To facilitate making test #2 of Fig. 10, two ammeter test plugs wired together with a foot or two of flexible wire should be used. With these two test plugs suitably wired together, one of them may be shoved in the ammeter test jack associated with terminal 7, Figure 3, and the other shoved in the ammeter test jack associated with terminal 9, Figure 3. (This should not be done until the switches for terminals 6 and 8 have been open, thus short circuiting the current transformers involved). It is desirable to wire the test plugs together such that when one is shoved in the one ammeter test jack with the red side up, and the other is shoved in the other ammeter test jack with the black side up, it is then known that the B and C phase currents to the relay have been reversed at the input to the chassis in line with test #2, Fig. 10. After these test plugs are properly inserted, it is then appropriate to close the switches associated with terminals 6 and 8, Fig. 3, in order to remove the short circuit from the current transformer secondaries.

Perform the tests as indicated in Figure 10 recording the milliammeter readings and the relay input current at the same instant, for future reference. The headings "Circulating" and "Remote" in the table of Figure 10 refer to the test switch positions, "CIRC" and "REM." For tests 3 to 6 of Figure 10, the input current should be increased to about 1.5 amperes by an auxiliary current transformer, if the secondary load current is below this value. Also record the input and output readings with the test switch in the "Local" position. Typical values for the "Local" position readings are shown in Figure 13.

THREE TERMINAL LINES

A similar procedure to Figure 10 should be followed for three-terminal line applications. In this case open the line circuit breaker at one terminal, and disconnect the loads from the pilot wire terminals of the HCB relay at that terminal. This leaves the remaining portion of the line operating as a two terminal line. Now perform the normal tests as outlined for the two terminal line system test. When these tests have been satisfactorily completed, return the third terminal relay to normal and close the breaker at that station. Repeat the above procedure with a different breaker open and relay disconnected. This will complete the check of the three terminal line.

ENERGY REQUIREMENTS

The volt-ampere burden of the type HCB relay is practically independent of the pilot-wire resistance and of the current tap used. The following burdens were measured at a balanced three-phase current of 5 amperes:

For tap 4, $R_1 = 0.075$ and $R_0 = 0.39$

Phase A	1.25 volt-amperes	0°
Phase B	0.30 volt-amperes	285°
Phase C	0.90 volt-amperes	45°

For tap 4, $R_1 = 0.15$ and $R_0 = 1.6$

Phase A	2.3 volt-amperes	120°
Phase B	4.6 volt-amperes	285°
Phase C	5.3 volt-amperes	45°

The angles above are the degrees by which the current lags its respective voltage.

The continuous rating of the relay is 10 amperes.

The two-second overload ratings of the relay are 150 amperes phase and 125 amperes ground currents.

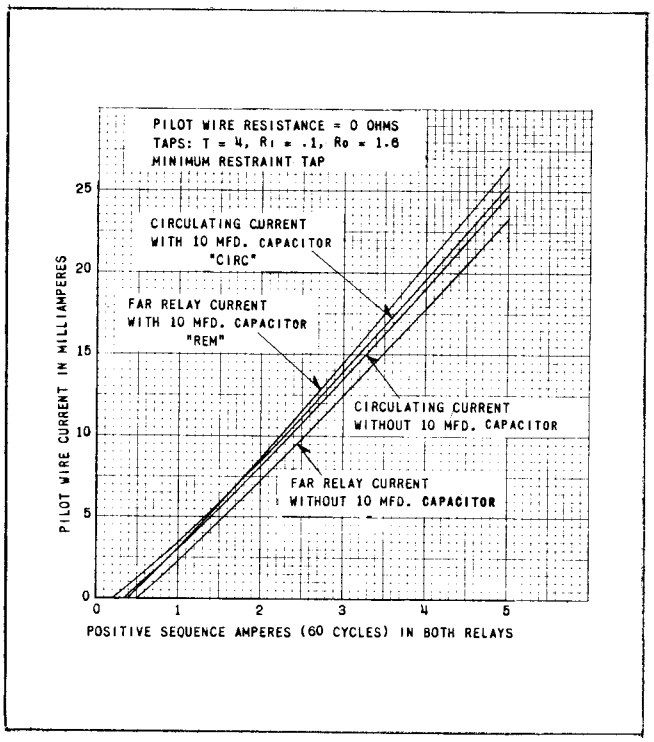

Fig. 11. Typical Test Output vs. Input Relay Current in a Two-Terminal Line with Zero Pilot-Wire Resistance.

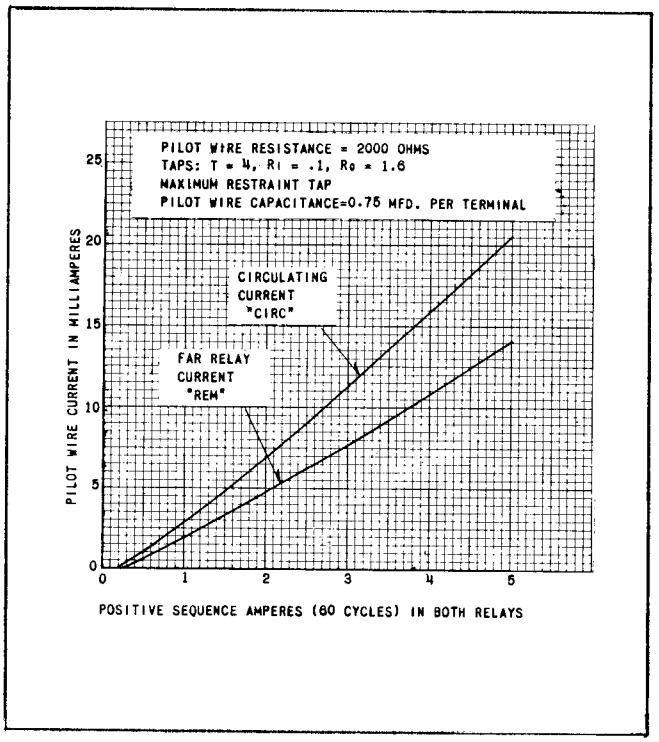

Fig. 12. Typical Test Output vs. Relay Current in a Two-Terminal Line with 2000-Ohm Pilot-Wire Resistance With or Without 10-mfd Capacitor.

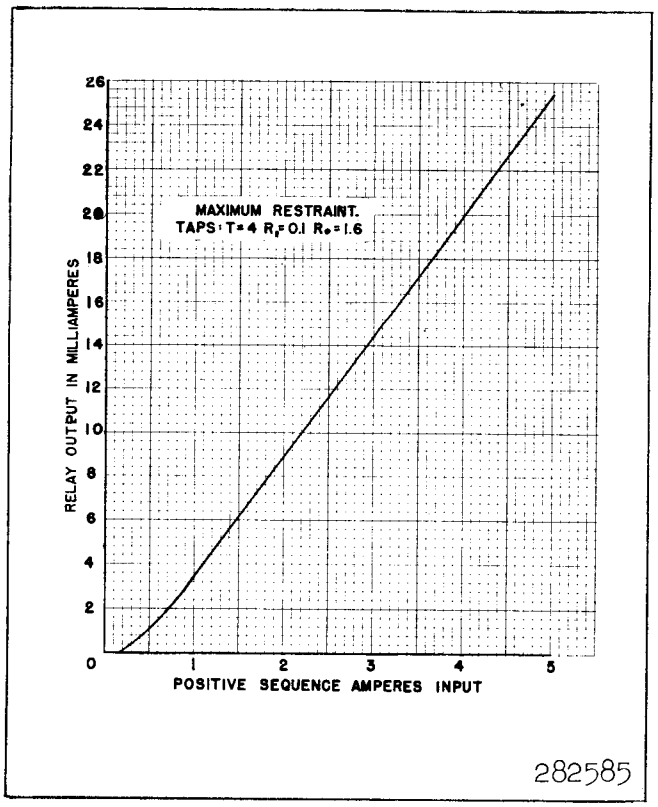

Fig. 13. Typical Curve of Relay Output vs. Positive-Sequence Input - Test Switch in Local Position.

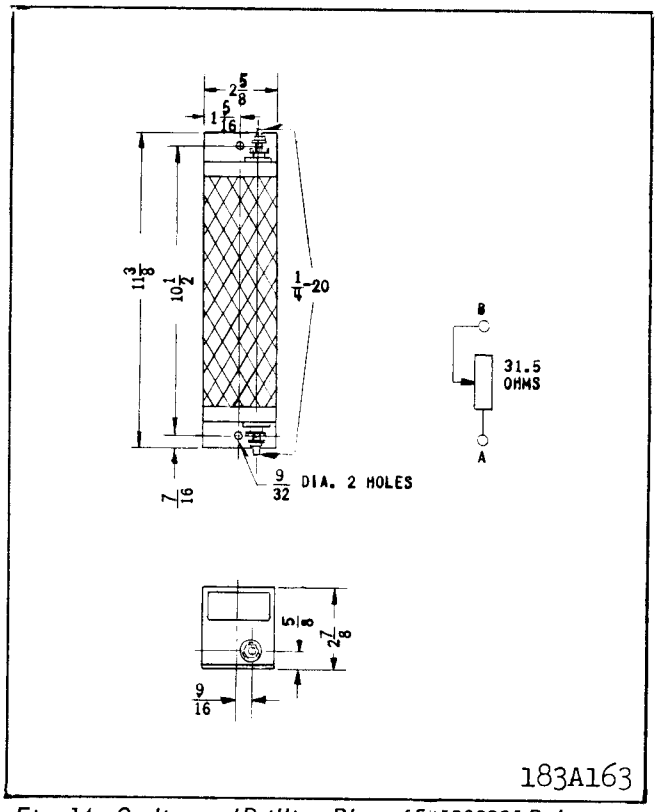

Fig. 14. Outline and Drilling Plan of S#1209991 Balancing Resistor for Three-Terminal Line Applications.

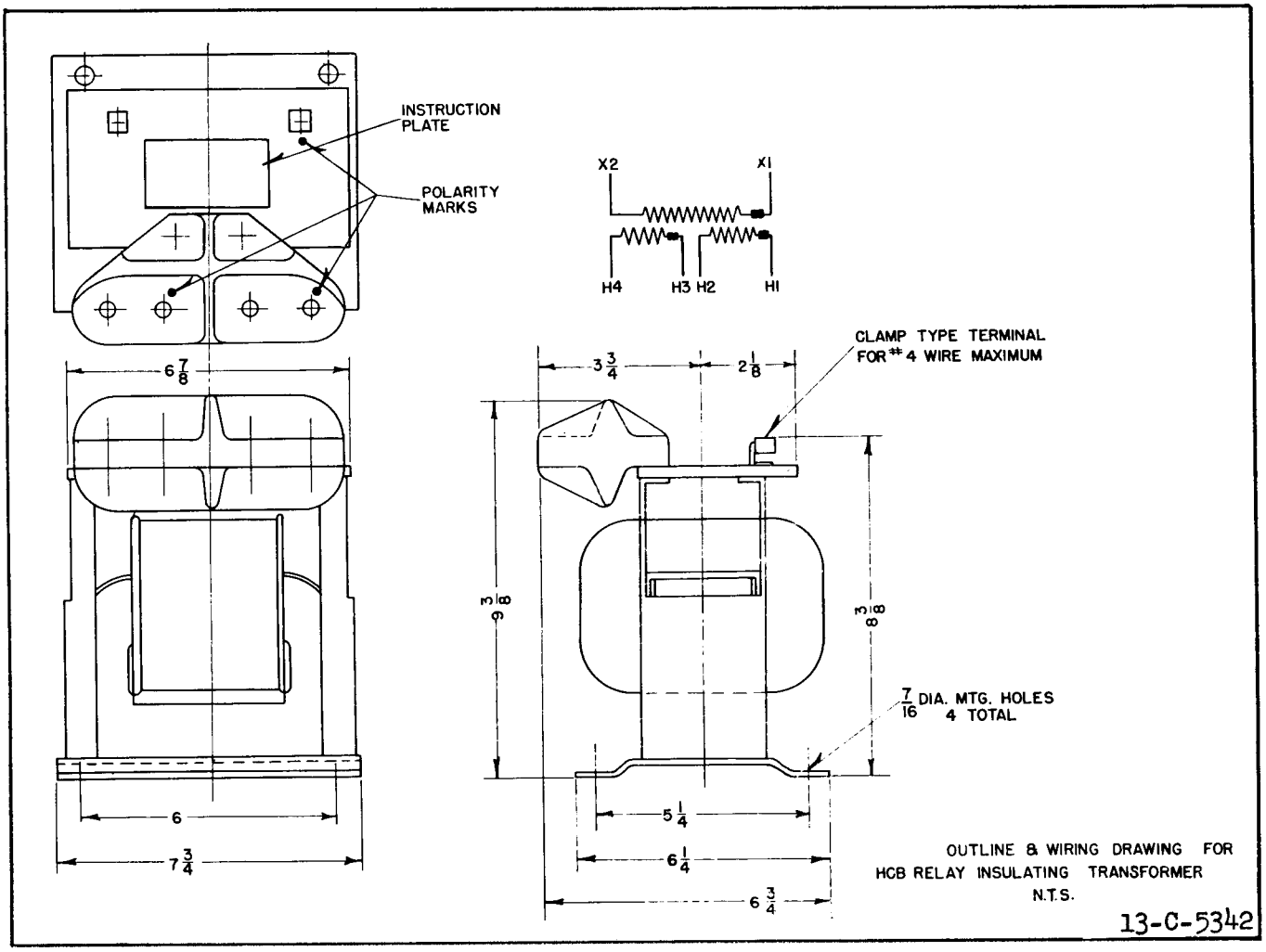

Fig. 15. Outline and Drilling Plan of HCB Relay Insulating Transformer.

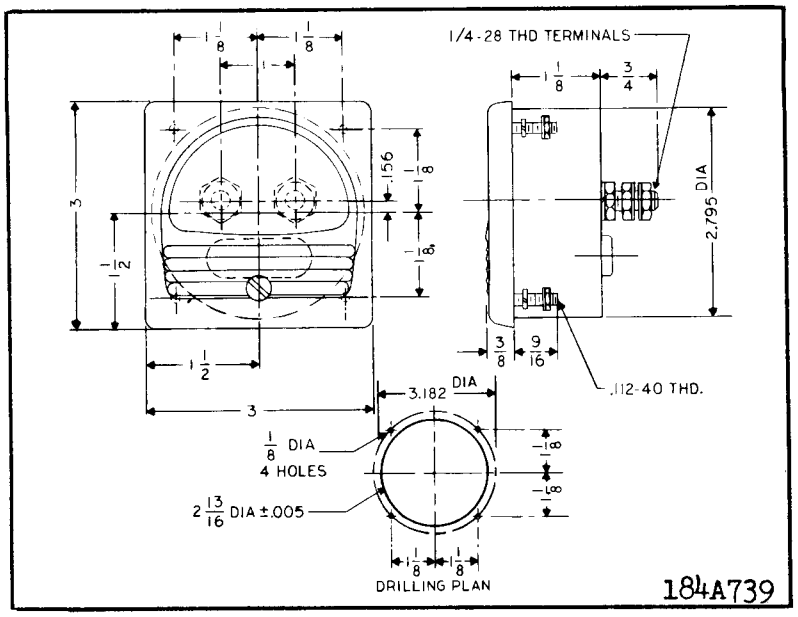

Fig. 16. Outline and Drilling Plan of the Semi-Flush-Type Test Milliammeter.

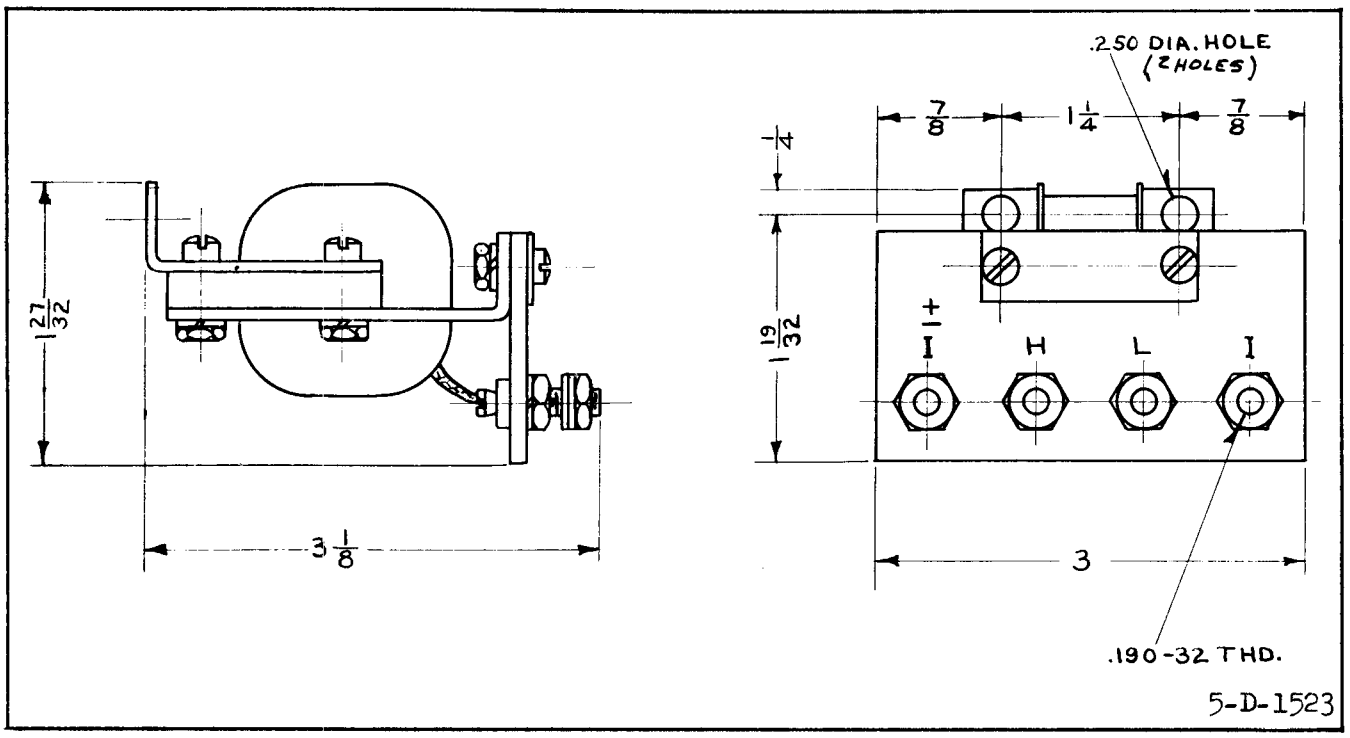

Fig. 17. Outline of the Test Milliammeter Auxiliary Transformer.

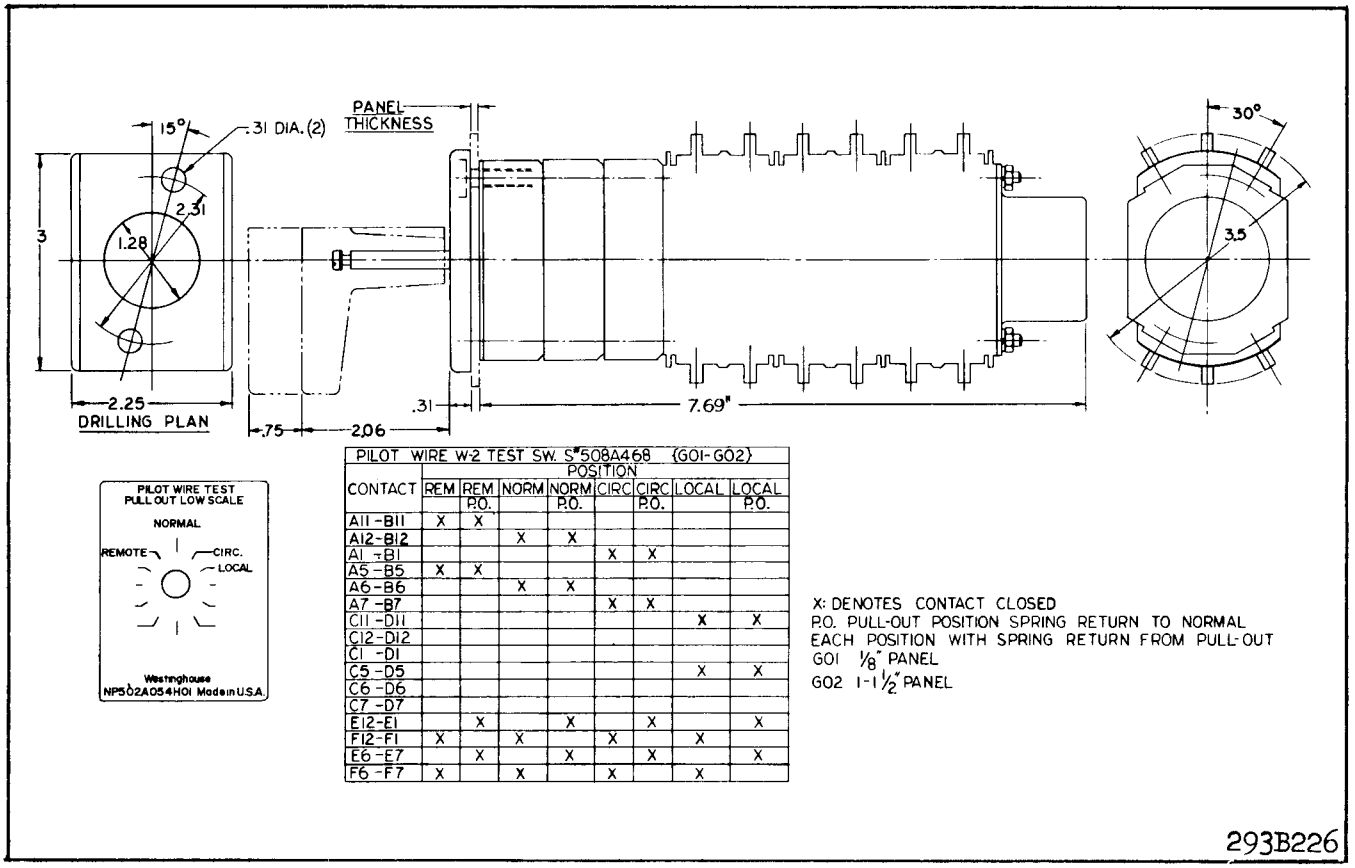

PILOT WIRE W-2 TEST SW. S#508A468 (G01-G02)

CONTACT	POSITION REM	REM P.O.	NORM	NORM P.O.	CIRC	CIRC P.O.	LOCAL	LOCAL P.O.
A11-B11	X	X						
A12-B12			X	X				
A1 -B1					X	X		
A5-B5	X	X						
A6-B6			X	X				
A7-B7					X	X		
C11-D11							X	X
C12-D12								
C1 -D1								
C5-D5							X	X
C6-D6								
C7-D7								
E12-E1		X		X		X		X
F12-F1	X		X		X		X	
E6-E7		X		X		X		X
F6-F7	X		X		X		X	

X: DENOTES CONTACT CLOSED
P.O. PULL-OUT POSITION SPRING RETURN TO NORMAL
EACH POSITION WITH SPRING RETURN FROM PULL-OUT
G01 1/8" PANEL
G02 1-1 1/2" PANEL

Fig. 18. Outline and Drilling Plan of the Type W-2 Test Switch.

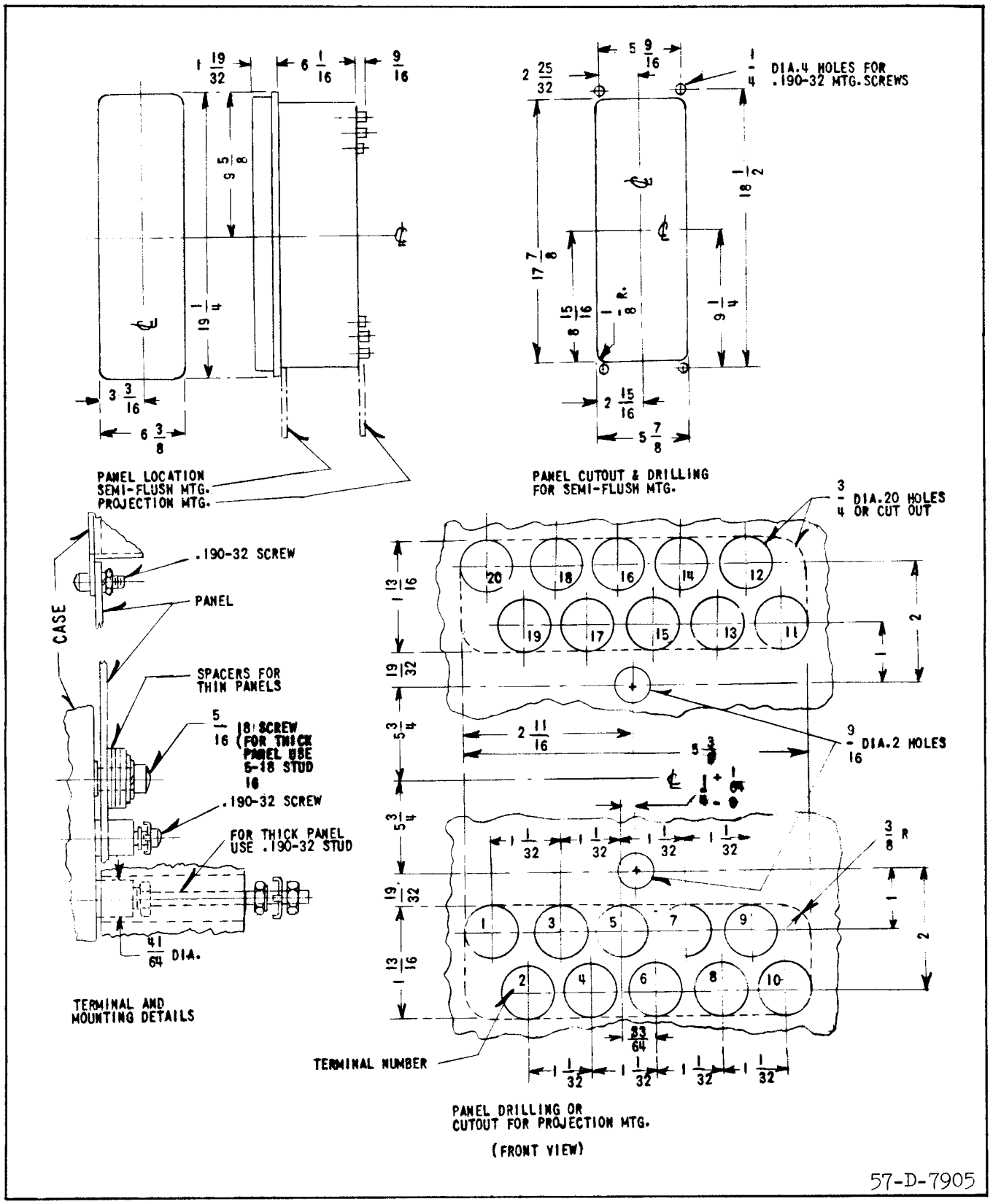

Fig. 19. Outline and Drilling Plan for the Type HCB Relay in the Type FT-42 Case.

PILOT-WIRE ENERGY

The current and voltage impressed on the pilot wire do not exceed 100 milliamperes and 60 volts. The wave form and magnitude of the pilot-wire current are such that telephone interference is within the limits allowed by the Bell Telephone Company. This permits the use of leased telephone lines as a pilot-wire channel.

RENEWAL PARTS

Repair work can be done most satisfactorily at the factory. However, interchangeable parts can be furnished to users who are equipped for doing repair work. When ordering parts, always give the complete nameplate data.

APPROXIMATE RESISTANCE VALUES OF COMPONENTS IN HCB RELAY

Transformer	Secondary Winding		Start to Tap 20 to 30 ohms
			Start to Finish 110 to 140 ohms
Polar Unit	Operating Coil		290 - 320 ohms
Polar Unit	Restraining Coil	Maximum	12 - 16 ohms
		Minimum	9 - 12 ohms
Resistor	Rc		41 - 44 ohms
Tube Resistor	Ro		As Marked on Ro Tap Plate
Looped Resistor	R1		As Marked on R1 Tap Plate
	R1A		As Marked on R1A Tap Plate
Rectifiers			IN91 Germanium Diodes
Indicating Contactor Switch			0.2 amp. Tap 6.5 ohms
			2.0 amp. Tap 0.15 ohms

R_C used in conjunction with 1N91 germanium diodes in order to match characteristics of relay with older style HCB relay using copper oxide rector type rectifiers.

WESTINGHOUSE ELECTRIC CORPORATION

RELAY-INSTRUMENT DIVISION **NEWARK, N. J.**

Printed in U.S.A.

INSTALLATION • OPERATION • MAINTENANCE

INSTRUCTIONS

TYPE HCB PILOT WIRE RELAY SYSTEM

CAUTION Before putting protective relays into service, remove all blocking which may have been inserted for the purpose of securing the parts during shipment, make sure that all moving parts operate freely, inspect the contacts to see that they are clean and close properly, and operate the relay to check the settings and electrical connections.

APPLICATION

The type HCB relay is a high speed pilot wire relay designed for the complete phase and ground protection of two and three terminal transmission lines. Simultaneous tripping of the relay at each terminal is obtained in about 20 milliseconds for all faults. A complete installation for a two terminal line consists of two relays, two insulating transformers, and an interconnecting pilot wire circuit. For a three terminal line, three relays, three insulating transformers, and a wye-connected pilot wire circuit with branches of equal series resistance are required.

CONSTRUCTION

The relay consists of a combination positive and zero phase sequence filter, a saturating auxiliary transformer, two full wave rectifier units, a polar type relay unit, a neon lamp, and an indicating contactor switch (ICS), all mounted in a single case. The external equipment normally supplied with the relay consists of an insulating transformer, a milliammeter and test switch.

SEQUENCE FILTER

The sequence filter consists of a three-legged iron core reactor and a set of resistors designated R1 and Ro. The reactor has three windings; two primary and a tapped secondary winding, wound on the center leg of a "F" type of lamination. The secondary taps are wired to the circularly arranged R1 tap connections in the front of the relay. The R1 tap links also connect to the R_1 resistor (looped resistance wire). Ro consists of three tube resistors with taps wired to the circularly arranged Ro tap connections in the front of the relay. R_{1A} taps are on the R_1 resistance wire and are wired to the circularly arranged R_{1A} tap connections in the front of the relay.

SATURATING TRANSFORMER

The output of the sequence filter connects to the primary of a two-winding saturating transformer. The primary winding is tapped and wired to a tap block T in the front of the relay. The secondary winding is connected to the neon lamp and from a fixed tap to the relay coil circuits.

* POLAR UNIT

This unit consists of a rectangular-shaped magnetic frame, an electromagnet, a permanent magnet, and an armature with either one or two contacts. The poles of the cresent-shaped permanent magnet bridge the magnetic frame. The magnetic frame consists of three pieces joined in the rear with two brass rods and silver solder. These non-magnetic joints represent air gaps which are bridged by two adjustable magnetic shunts. The operating and restraint windings are concentrically wound around a magnetic core. The armature is fastened to this core at one end and floats in the front air gap at the other end. The moving contact is connected to the free end of a leaf spring.

RESTRAINT TAPS

A set of restraint taps are located on the front of the relay near the polar unit. These taps are the maximum and minimum restraint taps of the relay.

INDICATING CONTACTOR SWITCH UNIT (ICS)

The d-c indicating contactor switch is a small clapper-type device. A magnetic armature, to which leaf-spring mounted contacts are attached, is attracted to the magnetic core upon energization of the switch. When the switch closes, the moving contacts bridge two stationary contacts, bypassing the main relay contacts. Also during this operation, two fin-

SUPERSEDES I.L. 41-971.2C
*Denotes change from superseded issue.

EFFECTIVE MAY 1969

gers on the armature deflect a spring located on the front of the switch, which allows the operation indicator target to drop. The target is reset from the outside of the case by a push rod located at the bottom of the cover.

The front spring, in addition to holding the target, provides restraint for the armature, and thus controls the pick-up value of the switch.

OPERATION

The connection of the HCB system of relays to the protected transmission line is shown in Fig. 8. In such a connection, the relays operate for faults within the line terminals but not for faults external to the protected transmission line. This is accomplished by comparing the relative polarities of voltages at opposite ends of the transmission line by means of a metallic pilot wire.

As shown in Figure 8, the composite sequence filter of each HCB relay receives three phase current from the current transformers of the transmission line. The composite sequence filter of the HCB converts the three-phase current input into a single-phase voltage output, V_F, of a magnitude which is an adjustable function of the phase A positive and zero sequence current. This voltage, V_F, is impressed on the primary wiring of the saturating transformer. The saturating transformer output voltage, V_S, is applied to the relay coils and to the pilot wire through an insulating transformer. The saturating transformer and a neon lamp across its secondary winding serve to limit the energy input to the pilot wire.

During an external fault, assuming matched relays, the magnitude of V_S at both stations will be the same. The relative polarities of the V_S voltages will be as shown in Figure 4. Since the voltages add, most of the current will circulate through the restraint coils and the pilot wire, with a minimum of operating coil current. The relative effects of the operating and restraint coil currents are such that the relay is restrained.

During an internal fault, the relative V_S polarities reverse. Since the V_S voltages now oppose each other, most of the current flowing in the restraint coils is also forced through the operating coils with a minimum of current in the pilot wire. This increase in operating current overcomes the restraining effect and both the relays operate.

Within limits, as defined in Figure 7 and under "Characteristics," all the relays will operate for an internal fault regardless of the fault current distribution at the various stations. The nominal pickup (total internal fault current) of the relaying system is equal to the minimum trip of a single relay multiplied by the number of relays. For example, if the pickup of each relay, with the pilot wire open, is 6 amperes, a two terminal line system has a nominal pickup of 2 x 6 = 12 amperes.

PILOT WIRE EFFECTS

In Figure 4 it can be seen that a short-circuited pilot wire will short circuit the relay operating coils. Depending on the location of the short, at least one of the relays will fail to trip during an internal fault. If the pilot wire is open circuited, almost all the restraint coil current will flow through the operating coil and the relay operates as an over-current device.

Excessive pilot wire series impedance will approach an open-circuited condition and the relays will operate during external faults. Excessive pilot wire shunt capacitance will approach a short-circuited condition and the relays will not operate.

* POLAR UNIT THEORY

The polar unit flux paths are shown in Figure 5. With balanced air gaps, the permanent magnet produces flux flowing in two paths, one through the front gaps and one through the rear gaps. This flux produces north and south poles, as shown. By turning the left shunt in, some of the flux is forced through the armature, making it a north pole. Thus, reducing the left-hand rear gap will produce a force tending to pull the armature to the right. Similarly, reducing the right-hand gap will produce a force tending to pull the armature to the left.

CHARACTERISTICS

The voltage, V_F, impressed by the filter upon the saturating transformer is:

$$V_F = 2I_{A1} R_1 + I_{A0} (R_1 + 3R_0) \text{ volts} \qquad (1)$$

where R_1 and R_0 are the positive and zero sequence tap values, respectively;

I_{A1} and I_{A0} are the positive and zero sequence phase A current inputs, respectively, in amperes. *These are vector quantities.*

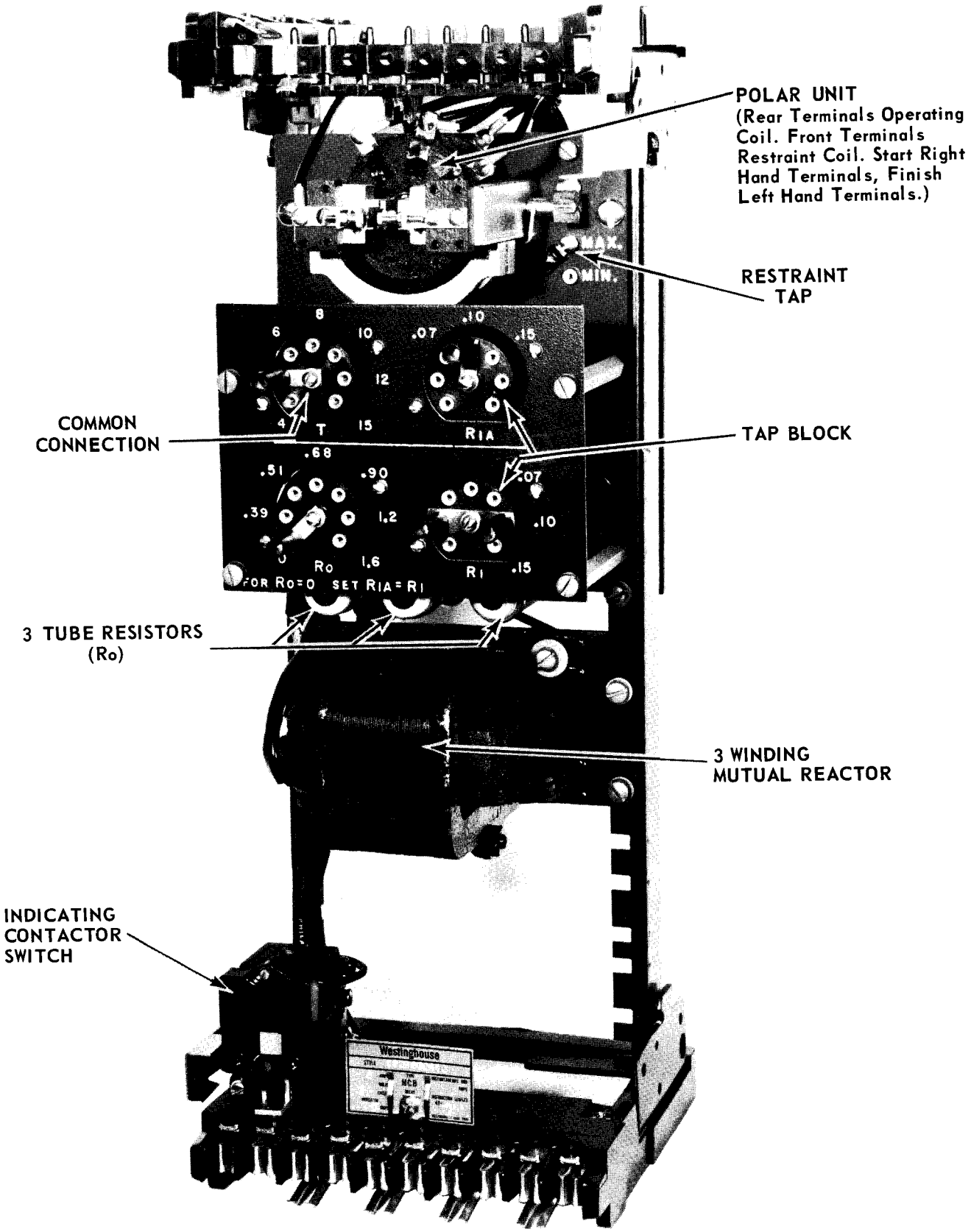

Fig. 1. Type HCB Relay Without Case (Front View).

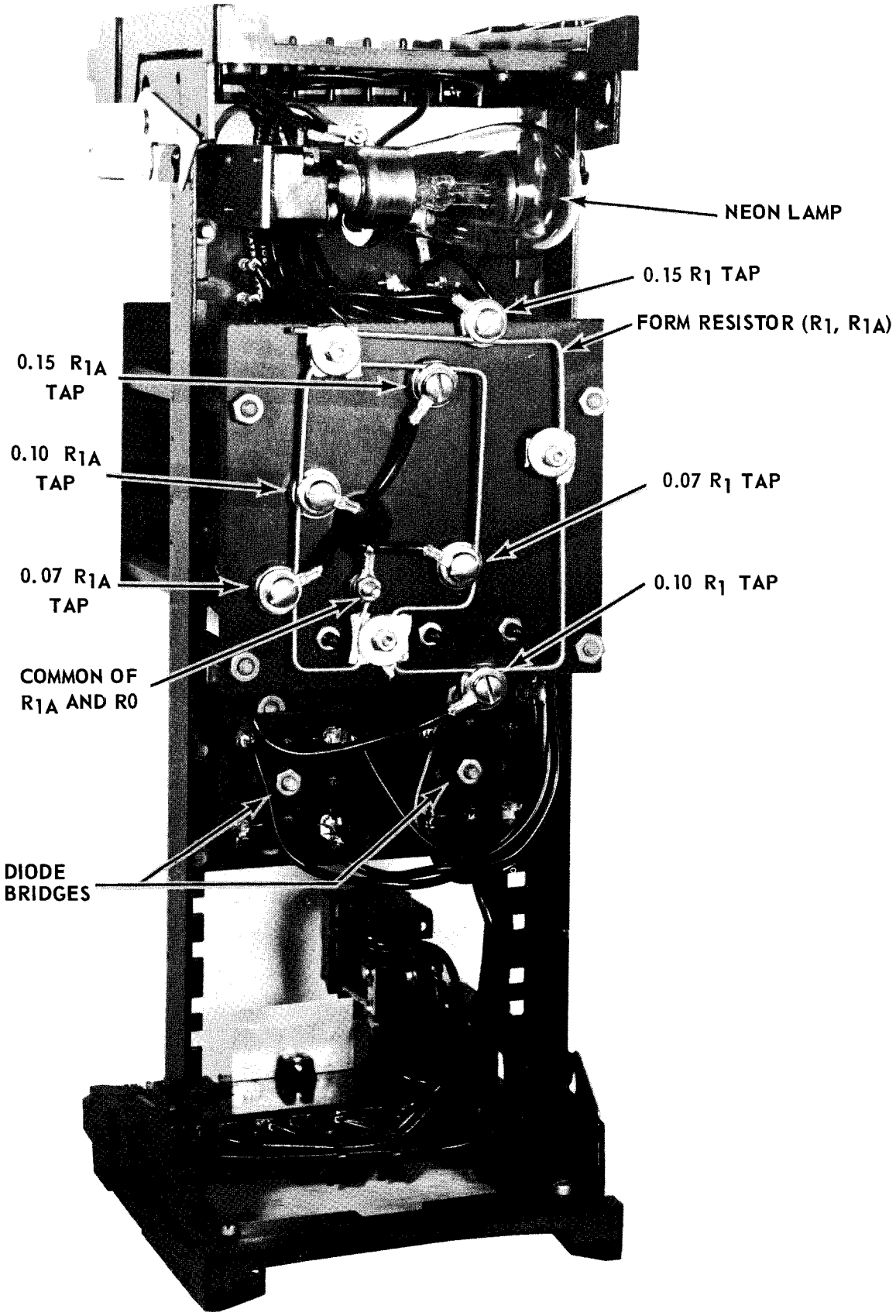

Fig. 2 Type HCB Relay Without Case (Rear View).

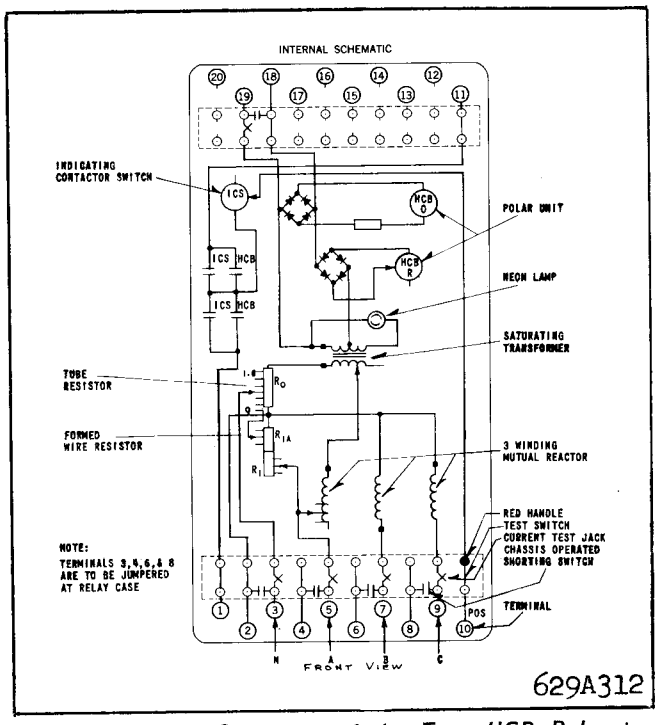

Fig. 3. Internal Schematic of the Type HCB Relay in FT-42 Case (Double Trip Circuit). For the Single Trip Relay the Circuits Associated with Terminal 11 are omitted.

SINGLE RELAY PICKUP (PILOT WIRE OPEN) I_S

Single relay pickup, I_S, is defined as the phase current required to operate one relay with the pilot wire side of the insulating transformer open circuited (H1-H4). The single relay pickup point in terms of filter voltage is:

$$V_F = 0.2T \tag{2}$$

where T is the saturating transformer tap value. Single relay pickup is defined by equating (1) & (2):

$$0.2T = 2\,I_{A1}\,R_1 + I_{A0}\,(R_1 + 3R_0) \tag{3}$$

Current I_S varies with the type of fault. For example, for a 3 phase fault, $I_S = I_{A1}$, since only positive sequence current is present. Substituting $I_S = I_{A1}$ in Eq. (3) & rearranging, the 3 phase fault pickup is:

$$I_S = I_{A1} = \frac{0.2T}{2\,R_1} = \frac{T}{10R_1} \quad \text{(3 phase fault)} \tag{4}$$

If $R_1 = 0.1$, $R_0 = 1.6$ & $T = 4$:

$$I_S = \frac{T}{10R_1} = \frac{4}{10X0.1} = 4 \text{ amp. (3 phase fault)}$$

For a phase A to ground fault, if $I_{A1} = I_{A2} = I_{A0}$ (I_{A2} is the phase A negative sequence current):

$$0.2T = 2I_{A1}\,R_1 + I_{A1}\,(R_1 + 3R_0)$$

$$I_{A1} = \frac{0.2T}{3(R_1 + R_0)} = I_{A0}$$

But: $I_S = I_{A1} + I_{A2} + I_{A0}$

$= 3I_{A1}$

$$\text{So:}\quad I_S = 3I_{A1} = \frac{0.2T}{R_1 + R_0} \quad \text{(A-G fault)} \tag{5}$$

If $R_1 = 0.1$, $R_0 = 1.6$ & $T = 4$:

$$I_S = \frac{0.2T}{R_1 + R_0} = \frac{0.2x4}{0.1 + 1.6}$$

$$= \frac{0.8}{1.7} = 0.471 \text{ amp. (A-G fault)}$$

NOMINAL PICKUP (ALL RELAYS)

The nominal pickup, I_{nom}, is defined as

$$I_{nom} = KI_S \tag{6}$$

where I_{nom} = total internal fault current
K = number of relays (2 or 3)
I_S = single-relay pickup with pilot wire disconnected (see above)

For example, for a phase-A-to-ground fault, $I_{A1} = I_{A0}$ with the pilot wire open circuited, the single-relay pickup was previously determined as $I_{AG} = 0.471$ ampere. For a two-terminal line, the nominal pickup for a phase-A-to-ground fault ($R_1 = 0.1$; $R_0 = 1.6$; $T = 4$) is:

$$I_{nom}\ (\text{A to G}) = 0.471K = 0.471 \times 2 = 0.942 \text{ ampere.}$$

MINIMUM TRIP (ALL RELAYS)

With equal inputs to all relays and zero pilot-wire shunt capacitance, the relays will operate at their nominal pick-up point. The minimum trip points will vary somewhat from nominal value, depending on the pilot-wire constants and the magnitude and phase angle of the various relay input currents. For example, Figure 6 shows the relay operating points for a two-terminal line, assuming input current to the near relay, only.

An example of the characteristics with various current distributions is shown in Figure 7. The filter

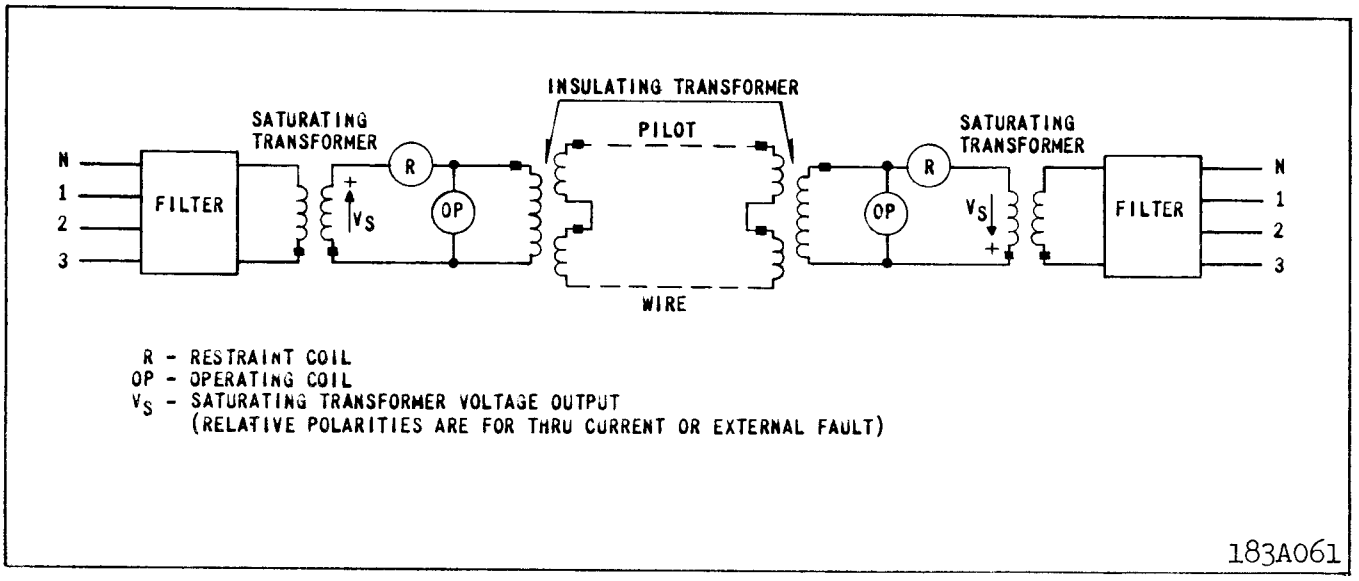

Fig. 4. Simplified External Schematic of the HCB Relay System.

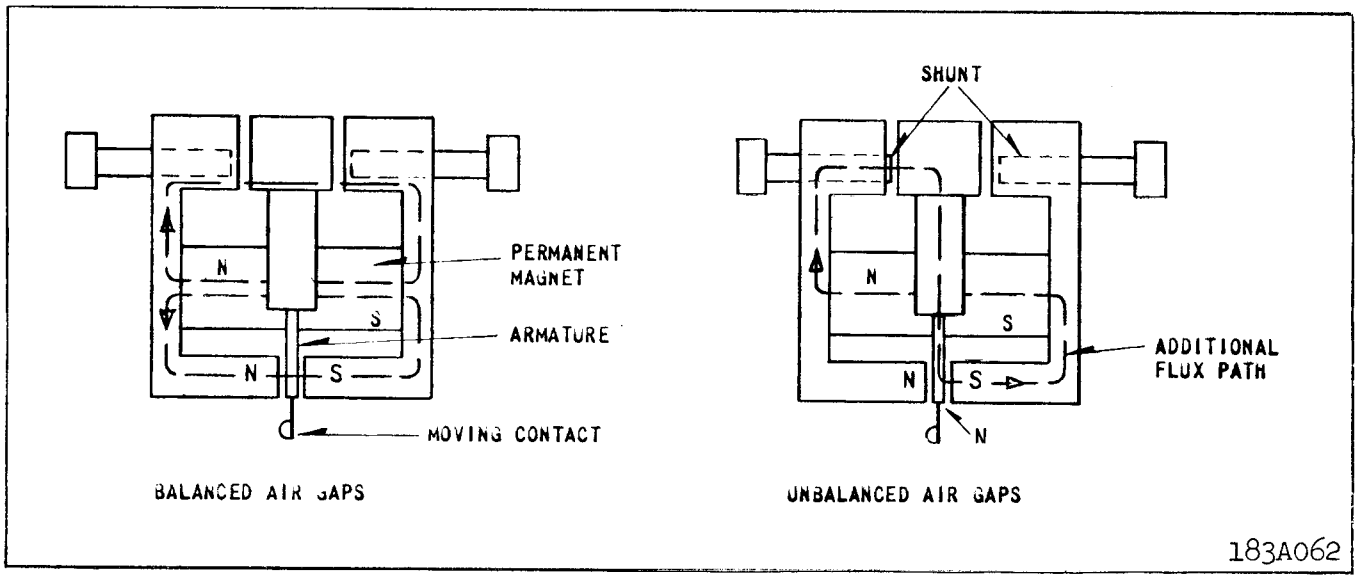

Fig. 5. Polar Unit Permanent Magnet Flux Paths.

output voltage, V_F, of each relay, as defined by equation (1) must be in phase or 180 degrees out of phase, in order for Figure 7 to apply.

INSULATING TRANSFORMER

Unless otherwise noted, all characteristics presented include an insulating transformer with each relay. Two ratios are available: 4/1 and 6/1. The high voltage side is connected to the pilot-wires.

PILOT-WIRE REQUIREMENTS

The relays should not be applied with pilot-wire series resistance or shunt capacitance exceeding the following values:

TABLE I

No. of Relays	Insulating Transformer Ratio			
	4/1		6/1	
	R_L	C_S	R_L	C_S
2	2000	1.5	—	—
3	$500/_{LEG}$	1.8	$1000/_{LEG}$	0.75

R_L = series loop resistance in ohms.

C_S = total shunt capacitance in microfarads.

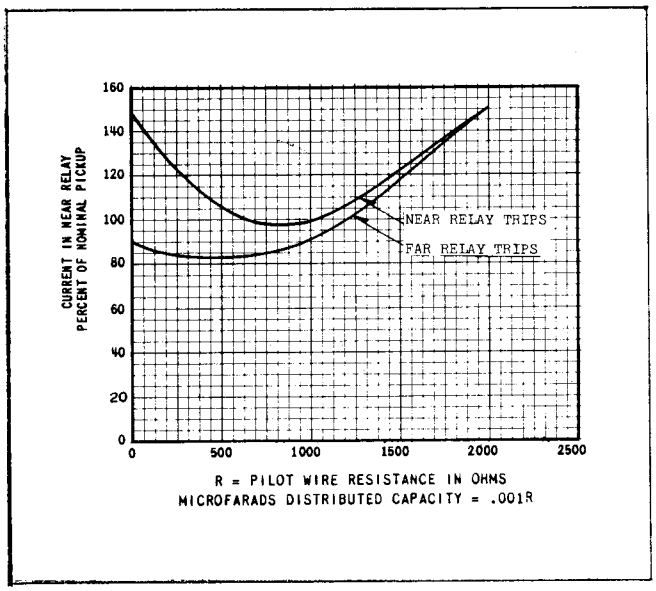

Fig. 6 Typical Curves Showing the Effect of the Pilot Wire on Minimum Trip Current, Two-Terminal Line (Maximum Restraint Tap). Insulating Transformer 4/1 ratio.

Where the shunt capacitance exceeds the above amount, it may be feasible in some cases to provide shunt reactors to compensate for the excessive capacitance. The amount of capacitance which can be compensated is limited and varies depending upon the magnitude of the pilot-wire distributed effect.

A shielded, twisted pilot wire pair, preferably of #19 AWG or larger, is recommended; however, open wires may be used if they are frequently transposed in areas of exposure to power circuit induction. The voltage impressed across either insulating transformer (H-1 to H-4) as a result of induction or a rise in station ground potential, should be less than 7.5 volts to prevent undesired relay operation.

For three-terminal applications, the loop resistance of all legs of the pilot wire must be balanced within 5 percent, with variable resistors as shown in Figure 8. The pilot wire resistance to be balanced is divided by 16 and 36 for the 4 to 1 and 6 to 1 ratio insulating transformers respectively, since the balancing resistors are located on the relay side of the insulating transformers.

Induced voltages and rises in station-ground potential may be handled by the following means:

a) Neutralizing reactors may be connected in series with the pilot wire to hold the pilot wire potential close to the remote ground potential in the presence of a rise in station-ground potential. They do not limit pilot-wire voltages to safe values in the presence of a longitudinal induced voltage. When using the neutralizing reactor, the pilot-wire sheath should be insulated from station ground to minimize sheath-to-pair potential in the presence of a rise in station-ground potential. All other pairs in the cable which are connected to station ground should also be protected with neutralizing reactors to minimize pair-to-pair voltages.

b) Drainage reactors may be connected across the pilot wire and to ground through a KX642 protector tube. The drainage reactor is particularly effective in limiting pair-to-ground voltage in the presence of an induced voltage. When the tube flashes, both wires are connected to ground through the drainage reactor windings which offer a low impedance to ground but maintain a high impedance to an a-c voltage across the wires. Thus, the HCB system will operate normally even though the protector tube has flashed over. The drainage reactor is not intended to handle a rise in ground potential.

c) The neutralizing and drainage reactors may be utilized together. If the neutralizing reactor is to be of any value, the drainage reactor through the KX642 protector tube must be connected to remote ground.

* For information with reference to the insulation and protection equipment, refer to I.L. 41-971.4.

TRIP CIRCUIT

The main contacts will safely close 30 amperes at 250 volts d.c., and the seal-in contacts of the indicating contactor switch will safely carry this current long enough to trip a circuit breaker.

The indicating contactor switch has two taps that provide a pick-up setting of 0.2 or 2 amperes. To change taps requires connecting the lead located in front of the tap block to the desired setting by means of a screw connection.

SETTINGS

There are four settings in the relay. The correct tap setting should be determined as outlined under "Setting Calculations".

1) Restraint taps-maximum or minimum
   To change taps, connect the lead in front of the relay to the correct tap.

2) T tap- 4, 5, 6, 8, 10, 12, and 15
   To change taps, loosen center screw and move tap link to desired setting. Tap screw and center screw to be tight after tap change is made.

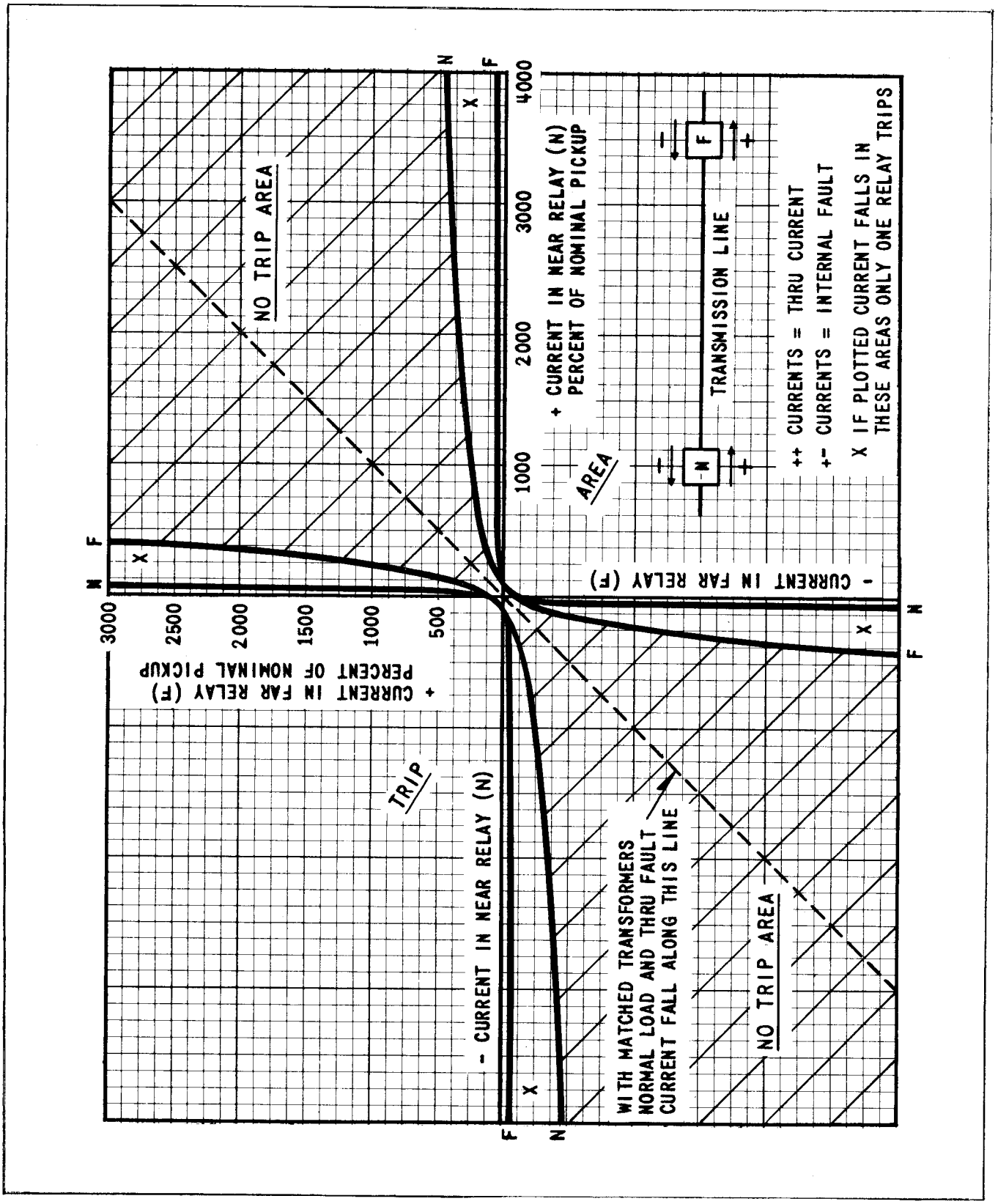

Fig. 7 Typical Operating Characteristics of the HCB Relay System – Maximum Restraint Tap, with 4/1 Insulating Transformers and 2000-Ohm Pilot Wire. V_F of Near and Far Relays in Phase or 180° Out of Phase.

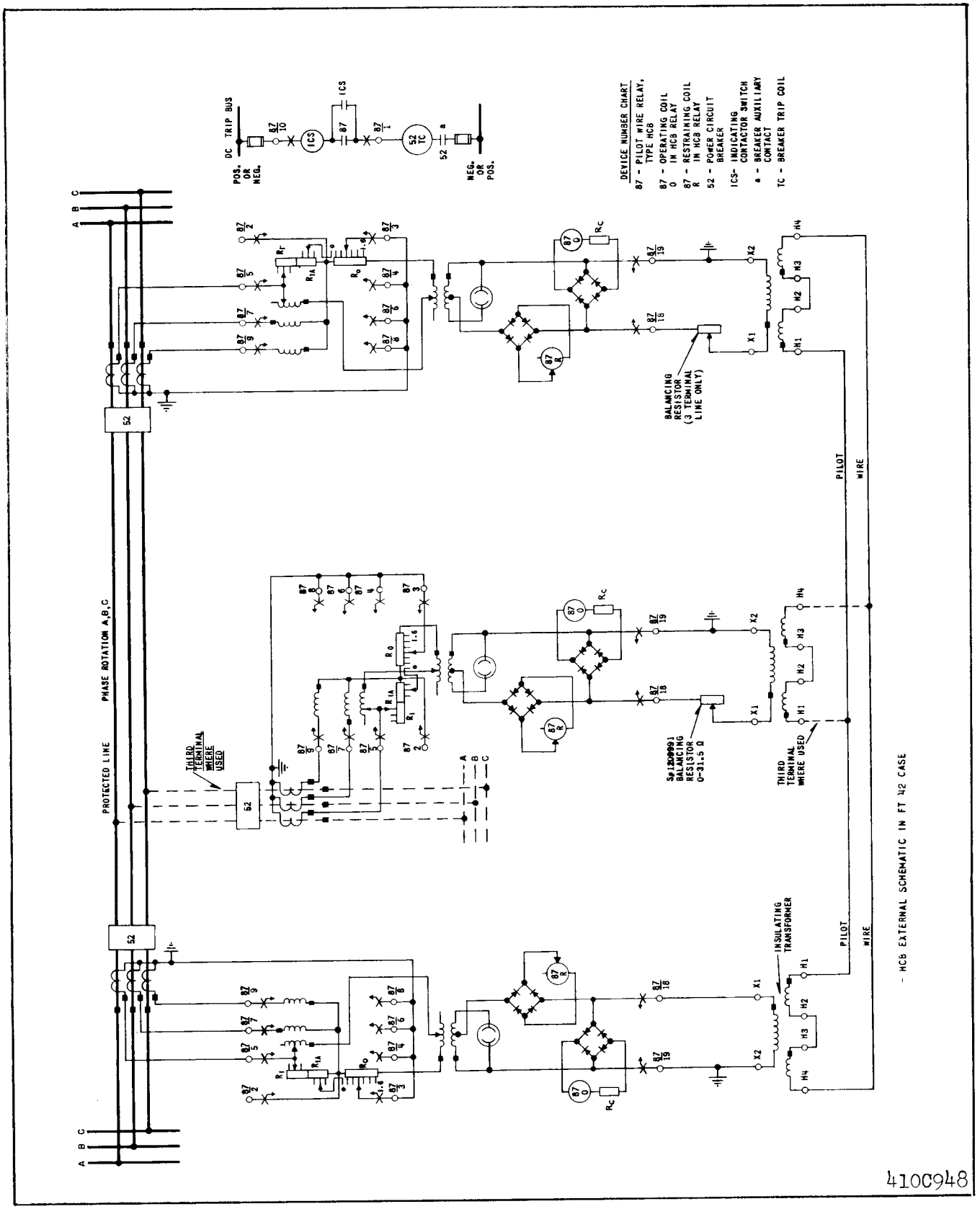

Fig. 8. External Schematic of the Type HCB Relay in FT-42 Case - Two- or Three-Terminal Line.

3) R_1 tap- 0.07, 0.10, 0.15
To change taps, loosen center screw and move tap link to desired setting. Insert two tap screws at each end of the tap link and tighten center screw as well as two tap screws.

4) Ro tap– 0.39, 0.51, 0.68, 0.90, 1.2 and 1.6
To change taps, loosen center screw and move tap link to desired tap. Tap screw and center screw to be tight after tap change is made.

* 5) R_{1A} Taps – (0.07, 0.10, 0.15)
Note: It is recommended that these taps be set in the same tap as the R_1 tap for all applications.

To change taps, loosen center screw and move tap link to desired tap. Tap screw and center screw to be tight after tap change is made.

INDICATING CONTACTOR SWITCH (ICS)

The only setting required on the ICS is the selection of the 0.2 or 2.0 ampere tap setting. This selection is made by connecting the lead located in front of the tap block to the desired setting by means of the connecting screw.

SETTING CALCULATIONS

The HCB relay has four sets of taps: R_1, T, R_0, and restraint taps. The following discussion establishes limits for the various tap settings under different operating conditions. It should be kept in mind that settings to obtain operation on minimum internal fault conditions are based on the total fault current that flows into the protected line from all terminals.

TERMS

R_1, T, R_0 – Relay taps

I_{3p} – total minimum internal 3-phase secondary fault current fed from all terminals. divided by the number of terminals (2 or 3)

I_L – maximum secondary load current flowing through the protected line.

I_g – total minimum secondary ground fault current fed into the protected line from all terminals, divided by the number of terminals.

$I_{nom.}$(P-P) – nominal internal phase to phase fault sensitivity.

$I_{nom.}$(P-G) – nominal internal line to ground fault sensitivity.

R_{Nc} (I), R_{Nc} (II) – current transformer ratio at Station I and II respectively.

* PHASE FAULT SENSITIVITY (R_1 and T Taps)

The phase fault pickup is determined by the R_1 and T taps. In order to operate on the minimum line-to-line fault current, the R_1 and T taps should be set for not more than:

$$\frac{T}{R_1} = 5I_{3P} \qquad (7)$$

In order to prevent operation on load current if the pilot wires become open circuited, the R_1 and T taps should be set for not less than:

$$\frac{T}{R_1} = 10I_L \qquad (8)$$

The available taps are:

R_1: 0.07, 0.10, and 0.15

T : 4, 5, 6, 8, 10, 12, and 15

Where sufficient fault current is available, it is recommended that the relays be set as follows:

$$\frac{T}{R_1} = 1.25 \times 10I_L = 12.5I_L \qquad (9)$$

The required T/R_1 ratio may be obtained by any combination of T and R_1. However, the T tap must be set the same at all stations. The R_1 taps may be utilized to compensate for different CT ratios with two-terminal lines if the pilot-wire loop resistance is 1000 ohms or less. Auxiliary CT's and identical R_1 tap settings must be used with different main CT ratios on all three-terminal lines and on two-terminal lines with more than 1000 ohms loop resistance in the pilot wire.

* GROUND FAULT SENSITIVITY (R_0 Tap)

The ground fault pickup is determined by R_0 and T taps. (T should be determined by the phase setting.) In order to operate on the minimum line-to-ground fault current, the R_0 tap setting should be not less than:

$$R_0 = \frac{0.2T}{I_g} \qquad (10)$$

The available R_0 taps are: 0.39, 0.51, 0.68, 0.90, 1.2, and 1.6.

* R_{1A} TAPS

The R_{1A} taps, 0.07, 0.10, and 0.15, are utilized to set $R_0 = 1/3\ R_1$, where no zero sequence sensitivity is desired. Equation (10) does not apply for these three taps. These taps are used where R_0 is set in 0. For all other settings of R_0, the R_{1A} taps are automatically bypassed.

For overhead lines, it is recommended that the 1.6 R_0 tap be used to obtain maximum sensitivity.

For cable circuits, where the line charging current exceeds 5% of nominal pickup current, set R_0 for about:

$$R_0 = \frac{T}{7.5}$$

* The R_0 taps at each line terminal should be set in the same proportion as the R_1 taps. (See phase fault sensitivity.)

* RESTRAINT TAP (Max. and Min.)

Set in maximum restraint tap for all two-terminal lines. Set in minimum restraint tap for all three-terminal lines. The use of maximum restraint on two terminal applications allows the relay to be used for all pilot wires as indicated in Table I. The use of minimum restraint on three terminal applications compensates for the desensitizing effect of a third terminal.

* *Note: The relay pick up will change by approximately 5% between setting in max. and min. restraint taps. Relay is shipped calibrated in the max. restraint tap. If set in min. restraint tap, calibrating will change. See "Adjustments and Maintenance" for re-calibration procedure.*

TAPPED LOADS

Where one transformer bank is tapped to a line protected with two HCB relays, the critical point is to set above the fault current flow for a fault on the other side of the bank. Set the R_1 and T taps for not less than:

$$\frac{T}{R_1} = 5I_{3PL} \qquad (11)$$

where I_{3PL} = total current for a 3-phase fault on the low side of the bank.

Note that the tapped bank must not act as a ground source for high-side faults (e.g. high side connected in delta). Ordinarily this means that the R_0 tap settings need not be changed, since no zero-sequence current flows in the line when the low side is grounded.

SETTING EXAMPLE

CASE I

Assume:

Two-terminal line.

CT ratio =	600/5
Full-load current = I_L =	400A
Minimum 3-phase internal fault current:	
Through Station I =	1500A
Through Station II =	2500A
Minimum internal line-to-ground fault current:	
Through Station I =	400A
Through Station II =	0

Phase fault pickup:

$$\frac{T}{R_1}(\text{maximum}) = 5I_{3P} = 5 \times \frac{1500 + 2500}{2} \times \frac{5}{600} = 83.3$$

$$\frac{T}{R_1}(\text{maximum}) = 10I_L = 10 \times 400 \times \frac{5}{600} = 33.3$$

The phase fault current is sufficient to allow the relay to be set to prevent tripping on an open-circuited pilot wire. Therefore, set:

$$\frac{T}{R_1} = 12.5I_L = 41.7.$$

Set both relays for: $T = 4$, $R_1 = 0.1$.

The nominal pick-up current from equation 6 for a phase-to-phase fault is:

$$I_{nom}(P\text{-}P) = \frac{T}{2.89R_1} = \frac{4}{0.289} = 13.8 \text{ amperes,}$$

$$\left[I_{nom}(P\text{-}P) = \frac{T}{1.92R_1} \text{ for three-terminal lines}\right]$$

Ground fault pickup:

$$R_0\ (\text{minimum}) = \frac{0.2T}{I_g} = \frac{0.2 \times 4}{400/2} \times \frac{600}{5} = 0.48$$

An R_0 tap exceeding 0.48 will provide tripping. As recommended for overhead lines:

Set $R_0 = 1.6$.

The ground fault nominal pickup is:

$$I_{nom}(P\text{-}G) = \frac{0.4T}{R_0 + R_1} = \frac{1.6}{1.6} = 1.0 \text{ ampere,}$$

$$\left[I_{nom}(P\text{-}G) = \frac{0.6T}{R_0 + R_1} = \text{for three-terminal lines}\right]$$

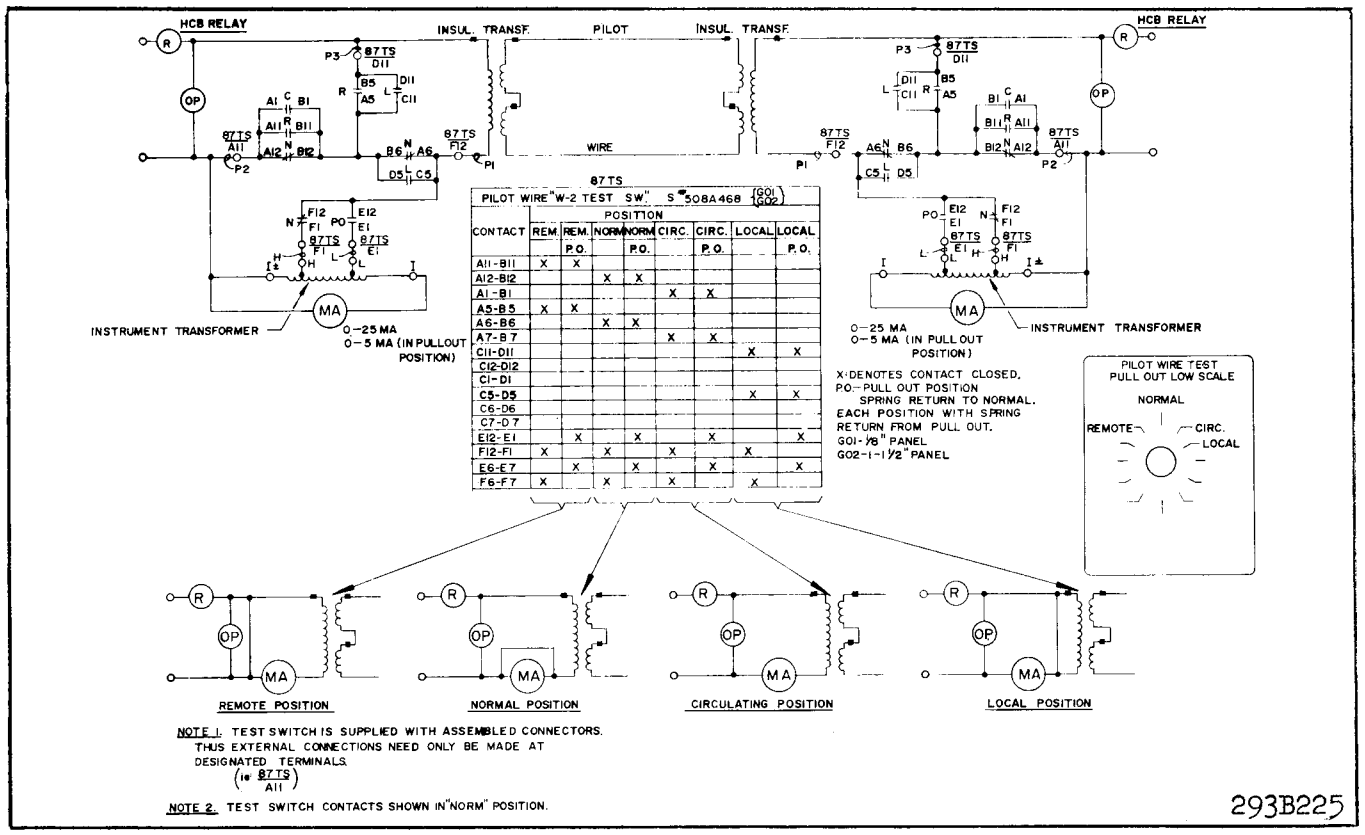

Fig. 9. HCB Relay Test Circuits with S#508A468601-G02 Type W-2 Switch and S#291B318A09 Milliammeter 0- 5-25 ma.

Restraint tap.

Use maximum restraint tap.

CASE II (DIFFERENT CT RATIOS)

Assume 400/5 CT's at Station II and 600/5 CT's at Station I, with less than 1000 ohms pilot wire loop resistance.

At Station I, set $R_O = 1.6$ as in Case I. However, set $R_1 = 0.15$ to obtain R_1 settings proportional to the CT ratio. From equation 9:

$$T = 12.5 R_1 I_L = 12.5 \times 0.15 \times 400 \times \frac{5}{600} = 6.25$$

Set T = 8

Station II settings are:

$$R_1 = 0.15 \frac{R_{Nc}(II)}{R_{Nc}(I)} 0.15 \times \frac{400}{600} = 0.10$$

T = 8 (Same as Station I)

$$R_O = 1.6 \times \frac{400}{600} = 1.07 \text{ (Set 1.2)}$$

INSTALLATION

The relays should be mounted on switchboard panels or their equivalent in a location free from dirt, moisture, excessive vibration, and heat. Mount the relay vertically by means of the four mounting holes on the flange for semi-flush mounting, or by means of the rear mounting stud or studs for projection mounting. Either a mounting stud or the mounting screws may be utilized for grounding the relay. The electrical connections may be made directly to the terminals by means of screws for steel panel mounting or to the terminal studs furnished with the relay for thick panel mounting. The terminals studs may be easily removed or inserted by locking two nuts on the stud and then turning the proper nut with a wrench.

For detailed Flexitest case information, refer to I.L. 41-076.

ADJUSTMENTS AND MAINTENANCE

CAUTION *Make sure that the neon lamp is in place whenever relay operation is being checked.*

ACCEPTANCE TESTS

The following tests are recommended when the relay is received from the factory.

Main Unit

Connect the relay to the insulating transformer, as shown in Figure 8, and set $R_1 = 0.10$, $R_0 = 1.6$, $T = 4$, and maximum restraint tap. With the insulating transformer terminals H1 and H4 open circuited, measure the minimum pick-up current, I_{79} (min.), with current applied through terminals 7 and 9. This
* value should not be greater than:

7.28 amperes.

* NOTE: The relay may operate at values of current lower than 7.28 amperes depending upon the insulating transformer used and the prior history of the polar unit. The pickup should not be lower than 4.8 amperes. To increase pickup, short H_1-H_4 of insulating transformer, apply 40 amperes momentarily to terminals 3 and 5 of relay and check pickup of relay. Should be between 6.9 to 7.0 amperes. If not, the polar unit should be recalibrated per "polar unit calibration."

Now, connect a resistance, R_{PW}, across H1 and H4 of the insulating transformer, with a 10-mfd capacitor connected between H2 and H3. Connect a capacitor, C_{PW}, in parallel with R_{PW}. With R_{PW} and C_{PW} set as specified in Table II suddenly apply $I_{35} = 30$ amperes (through terminals 3 and 5).

TABLE II

Rpw Test - Max. Restraint Tap

$R_1 = 0.10$, $R_0 = 1.6$, $T = 4$

Insulating Transformer Ratio	R_{PW} † in ohms		C_{PW} in microfarads
4 to 1	1200	1900	0.75
6 to 1	2700	4300	0.33

† The relay should not operate at the lower value of Rpw, but should operate at the higher value.

Additional tests for the sequence filter and the operating unit are described under "Calibration Check." These latter tests are not required unless the relay fails to meet the acceptance tests.

Indicating Contactor Switch (ICS)

Close the main relay contacts and pass sufficient direct current through the trip circuit to close the contacts of the ICS. This value of current should not be greater than the particular ICS tap setting being used. The indicator target should drop freely.

CALIBRATION CHECK

The following tests are recommended whenever a check on the relay calibration is desired.

Over-all Relay Check

* Over-all calibration can be checked by the procedure described under "Acceptance Tests." If the relay has been re-calibrated in the minimum restraint tap (factory calibration is made in the maximum restraint tap), the R_{PW} test should be made in accordance with Table III instead of Table II.

TABLE III

Rpw Test - Min. Restraint Tap

$R_1 = 0.10$, $R_0 = 1.6$, $T = 4$

Insulating Transformer Ratio	R_{PW} † in ohms		C_{PW} in microfarads
4 to 1	800	1400	0.75
6 to 1	1800	3100	0.33

† The relay should not operate at the lower value of Rpw, but should operate at the higher value.

Sequence Filter: Remove tap screw T and connect a high-resistance voltmeter across this open-circuited point by connecting to the tap plate and to one of the saturating transformer taps at the rear of the tap block. Energize the relay with $I_{79} = 6.94$ amperes (terminals 7 and 9). The measured open-circuit voltage, V_F, should be:

$$V_F = 8R_1 \pm 5\% \text{ volts.}$$

(e.g., if $R_1 = 0.1$, $V_F = 8 \times 0.1 = 0.8$ volt.)

Repeat this voltage measurement with $I_{59} = 6.94$ amperes.

Operating Unit: The following test will check the polar unit calibration and the performance of the rectifiers. Connect a variable non-inductive resistor across the high-voltage terminals of the insulating transformer (H1 to H4), and connect d-c milliammeters in series with the operating and restraining coils of the polar unit by opening these circuits. (The restraint can be opened at the tap circuit for max. and min. restraint. The operating circuit has to be opened at the polar unit.) These milliammeters should have

low resistance and should be capable of reading in the order of 20 to 25 ma in the operating coil and 100 to 150 ma in the restraining circuit. Using T = 4, R_1 = 0.1, R_o = 1.6, energize the relay with I_{35} = 10 amperes (terminals 3 and 5) and increase the variable resistance across the insulating transformer high-voltage terminals until the relay just trips. The values obtained should conform substantially to the following equations:

For minimum restraint

$$I_o = 0.12\ I_R + 8$$

For maximum restraint

$$I_o = 0.16\ I_R + 8$$

where I_o and I_R are operating and restraining coil coil currents, respectively, in milliamperes. The results are subject to variations between individual relays, due to different exciting impedances of the insulating transformers. However, the value should never be lower than:

For minimum restraint

$$I_o = 0.12\ I_R + 4$$

For maximum restraint

$$I_o = 0.16 I_R + 4$$

CALIBRATION PROCEDURE

If the factory calibration has been disturbed, the following procedure should be followed to recalibrate the relay.

FILTER CALIBRATION

A. R_1 Taps

1. Disconnect T current tap link and place Ro tap in 1.6
2. Connect voltmeter (low-reading, high resistance rectox) across relay terminal 2 and the common of T tap block.
3. Pass 5 amperes a.c. into terminal 5 and out terminal 9 of the relay.
4. Adjust the corresponding R_1 slide wire position (see Fig. 2 for location) to be within limits of following table for each specified setting of R_1 tap screw.

R_1 Tap Setting	Volts A.C.
.15	0.865 ± .008
.10	0.577 ± .007
.07	0.433 ± .005

B. R_{1A} Taps

1. Disconnect T current tap link and set Ro in O tap.
2. Connect a.c. voltmeter across relay terminal 3 and the common connection of R_{1A} and Ro (see Fig. 2 for location).
3. Pass 5 amperes a.c. into terminals 5 and out terminal 9 of the relay.
4. Adjust the corresponding R_{1A} slide wire position (see fig. 2 for location) to within limits of following table for each specified setting of R_{1A} Tap screw

R_{1A} Tap Setting	Volts A.C.
.15	0.250 ± .005
.10	0.167 ± .003
.07	0.125 = .003

C. Ro Taps

No adjustments can be made on the Ro resistors. Value of resistance can be checked by passing 5 amperes a.c. through terminal 3 and out terminal 9. T tap must be disconnected. Following voltages should be measured across terminal 2 and the specified tap of Ro.

Ro Tap Setting	Volts A.C.
.39	1.85 to 2.05
.51	2.45 to 2.68
.68	3.28 to 3.60
.90	4.33 to 4.70
1.20	5.78 to 6.27
1.60	7.72 to 8.38

* **Polar Unit Contact Adjustment:** Place a 0.065 to 0.072 inch feeler gage between the right hand pole face and the armature. This gap should be measured near the front of the right hand pole face. Bring up the back-stop screw until it just makes with the moving contact. Place a 0.030 to 0.045 * feeler gage between the moving contact and the stationary contact on the left-hand side of the polar unit. Bring up the stationary contact until it just makes with the gage and lock in place. For relays with double contacts make sure that both upper and lower contacts make at the same time.

Polar Unit Calibration: Connect the restraint tap link in the position in which it will be used. Connect terminals X1 and X2 of the insulating transformer across the pilot-wire terminals of the relay. Connect the relay taps on T = 4, R_1 = 0.1, R_o = 1.6.

The sensitivity of the polar unit is adjusted by means of two magnetic, screw type shunts at the rear of the element. Looking at the relay front view, turning out the right hand shunt decreases the amount of current required to close to the right hand stop. Conversely, drawing out the left hand shunt decreases the amount required to trip the relay. In general, the farther out the shunt screws are turned, the greater the toggle action will be and as a result, the dropout current will be lower. In adjusting the polar elements, be sure that a definite toggle action is obtained, rather than a gradual movement of the armature.

Start with both shunt out 4 to 5 turns. Short out the pilot wire on the high side of the insulating transformer. Momentarily apply 40 amperes from terminals 5 to 3. Now remove the short from H1 to H4 and, adjust the right hand shunt such that the contacts close with a positive snappy toggle action at I_{79} = 6.9 to 7.0 amperes. After this adjustment is complete, short out pilot wire and apply 40 amperes momentarily from terminals 5 to 3. Now remove the short from H1 to H4 and, check pickup for I_{79}. If value has changed from before, it will be necessary to re-adjust the right hand shunt. Several trials may be necessary before the pickup will be constant. In each case, the 40 amperes should be applied before any additional adjustments are performed on the shunt.

After the shunts have been adjusted, apply 40 amperes momentarily to terminals 3 and 5 of the relay with the pilot wire open. Pickup will be approximately 5 amperes with current applied to terminals 7 and 9. This change in pickup is due to a change in the residual magnetism in the polar unit of the relay. In the de-energized state, the permanent magnet of this unit produces a flux or magnetic bias to keep the contacts open. When the unit is energized, a second flux (electrical) is produced which either adds to or substracts from the magnetic flux. When the electrical flux is removed, the magnetic structure of the polar unit is changed. Hence, the flux produced by an excess of restraint current, adds to the magnetic bias, and the flux produced by an excess of operating current substracts from the magnetic bias. This characteristic is inherent in the polar unit and has no affect on the overall performance of the relay.

After the shunt adjustment has been made, change the input current connections to terminals 3 and 5. Apply 40 amperes with H, and H4 terminals shorted. Remove short and measure pickup with current applied to terminals 3 and 5. The relay should trip with I_{35} = 0.45 to 0.55 amperes.

ROUTINE MAINTENANCE

Contacts: All contacts should be cleaned periodically. A contact burnisher, S#182A836H01, is recommended for this purpose. The use of abrasive material for cleaning is not recommended, because of the danger of embedding small particles in the face of the soft silver and thus impairing the contact.

ICS Unit: Close the main relay contacts and pass sufficient direct current through the trip circuit to close the contacts of the ICS. This value of current should not be greater than the particular ICS tap setting being used. The indicator target should drop freely.

Operating Unit: Check the relay minimum pickup, with the pilot wires disconnected from terminals H1 and H4 of the insulating transformer, by energizing with I_{79} current (terminals 7 and 9). Pick-up current should be:

$$I_{79}\ (\text{min}) = \frac{T}{5.77\ R_1} \pm 5\%\ \text{amperes}$$

Additional tests are recommended with the pilot wire connected as described under "Complete System Test."

COMPLETE SYSTEM TEST

At the time of the initial installation and at subsequent maintenance periods, it is recommended that the following relay system checks be made, with the pilot wire connected.

MINIMUM PICKUP

PRECAUTION: In making this test with the relay in place on the switchboard, it is necessary to connect the load box in the circuit between the relay and the "hot" side of the supply circuit. If this precaution is not observed, it is possible to cause a short circuit between the grounded station service supply circuit and the ground of the current transformer circuit.

The minimum pickup of each relay should be checked before starting the system tests. With taps as specified in Fig. 10, and the pilot wire circuit open on the high side of the insulating transformer, each relay should trip with I_{AN} = 0.45 to 0.55 amp. or with I_{BC} = 6.9 to 7.0 amperes

With the pilot wire connected, energize one relay with I_{AN} and determine the minimum pick-up of all relays. Repeat this test by energizing the other relay or relays. Record these values for future reference. If the neon lamp is lit during these tests, the pilot circuit is presenting too high a shunting effect on the relays.

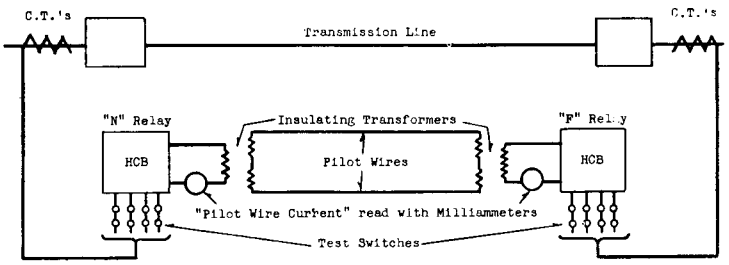

Note: The line should be carrying through load current amounting to at least 1.5 amperes as measured in the secondary of the Current Transformers. This test is based on the ratio of the C.T.'s being the same at each end of the line, in which case set the taps of both relays to $R_1 = .1$; $R_0 = 1.6$; $T = 4$ for this test.

	RELAY "N"					RELAY "F"				
Test No.	Test Switch	Relay Current	Relay Trip	"Pilot Wire Current" Circulating	"Pilot Wire Current" Remote	Test Switch	Relay Current	Relay Trip	"Pilot Wire Current" Circulating	"Pilot Wire Current" Remote
1		A,B,C,N	No	(1)	(1)		A,B,C,N	No	(1)	(1)
2		A,C,B,N	No	(2)	(2)		A,C,B,N	No	(2)	(2)
3		A,N	Yes	(3)	(0)		O	Yes	(3)	(3) (4)
4		O	Yes	(3)	(3) (4)		A,N	Yes	(3)	None
5		A,N	No	(3)	(3)		A,N	No	(3)	(3)
6		A,N	Yes	(6)			B,C,N	Yes	(6)	

REMARKS

Tests 1 and 2 are to check normal positive sequence rotation of phases.
Tests 3 and 4 simulate internal Phase A to Ground fault with single end feed.
Test 5 simulates an external Phase A to Ground fault. (5)
Test 6 simulates an internal Phase A to Ground fault, with equal feed from the two ends, since $I_B + I_C = - I_A$, with balanced load.

LEGEND OF TEST SWITCH SYMBOLS:

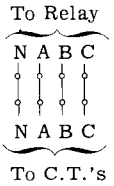

Normal Connection. All Currents to Relay.

EXAMPLE

Phase A current from C. T.'s to Relay. Phase B and C. T.'s shorted to neutral.

(1) The "pilot wire current" will vary depending upon the magnitude of the through load current and the characteristics of the pilot wire. See Figures 11 and 12.
(2) Since the relay is temporarily connected for negative sequence, it should have practically zero output in this test.
(3) These readings may be "off scale" depending upon the magnitude of the load current.
(4) The relay at this station should reset when the "far" current is being read because the local relay will be receiving no current from either the pilot wire or the current transformers.
(5) Test 4 and 5 can be repeated using phase B to neutral current, and again with phase C to neutral current, but this is not strictly necessary on the basis that, having proved the phase sequence with tests 1 and 2, and having proved the correspondence of phase A at the two ends of the line with test 5, then phases B and C must be correct.
(6) Some pilot wire current will be read, depending upon the magnitude of the distributed capacity of the pilot wire in combination with the magnetizing impedance of the insulating transformer.

Fig. 10. HCB Relay System Testing Procedure.

INTERPRETATION OF TESTS

1. Tests #1 and #2, Figure 10, are designed to indicate that the relays have been wired with the correct phase rotation. When the phase rotation is deliberately and temporarily changed by test #2, then the pilot-wire currents should be substantially zero. Any small value of pilot wire current which appears may be due to either a small unbalance in the load current, or else due to harmonic currents flowing through the line. If either relay has inadvertently been connected for the wrong phase rotation, then the fact will be apparent when reading local current. Local current should be interpreted from Figure 13, with the amount of load current which is present. If no current is read on test #1 for the local relay, and if current for test #2 is in line with Figure 13, then it is an indication that that particular relay has been connected for the wrong phase rotation.

a. In the event the pilot wire is open-circuited, the apparent circulating current will be quite low, being limited to the magnetizing current of the insulating transformer. Also, it will not be possible to read current from the remote end.

b. If the pilot wire is short-circuited, then the circulating current will be near normal, but it will not be possible to read current from the remote end.

2. If the pilot wire is reversed, (a) the circulating current will be low on test #1, but it will be possible to read pilot-wire current from the remote relay. (b) Both relays will trip on test #5. If the monitoring relays also suffer from this error in connection, then the error should be corrected at one relay location by reversing the connections to the H_1-H_4 terminals of the insulating transformer. However, if the monitoring relays do not suffer from this error, then the polarity of the pilot wires insofar as the HCB relay installation is concerned may be suitably corrected by making a reversal of connections either at the X_1-X_2 terminals of one insulating transformer, or at the output terminals of the relay, #18 and #19, Figure 3.

3. If the phases are rolled at one end of the line, then this will be picked up by test #5. On test #5, neither relay should trip when phase-A-to-neutral current is delivered to each of the two relays with the switching arrangement as shown and discussed. However, if one or both relays trip, then try checking the near relay, phase-A-to-neutral current, against phase-B-to-neutral current at the far relay. Also, check phase-A-to-neutral current at the near relay against phase-C-to-neutral current at the far relay. If, for example, neither relay trips when phase-A-to-neutral current is used for the near relay and phase-B-to-neutral current is used at the far relay, then it is an indication that what had been thought to be phase B current at the far location really identifies with phase A current at the near location. This identifies a rolled-phase condition, and also indicates the correction which must be made in the connections of the current transformer input to the relay.

4. One combination of errors which is somewhat tricky to pick up is the combination of pilot wires reversed plus a rolled-phase condition at one end. Let it be assumed that the pilot wire is reversed at the far end, making an error of 180 degrees. Then let it be assumed that the phases are also rolled by 120 degrees, thereby adding another error of 120 degrees. Adding these two together brings the total up to 300 degrees, which is within 60 degrees of what would be normal. Because of this, the only symptom which will appear in the first four tests is that the circulating current is likely to be lower than one would expect when read at one end or the other on test #1. However, test #5 may be used to identify this combination of errors. When the condition exists as described, when test #5 is extended to check phase A current at the near end against each of the three currents at the far end in turn, it will be found that at least one of the two relays will always trip. If this condition is found, reverse the pilot-wire connection, check out the rolled-phase condition and correct it, and then proceed with all six tests.

5. Test #6 is a final verification test.

Fig. 10 (continued)

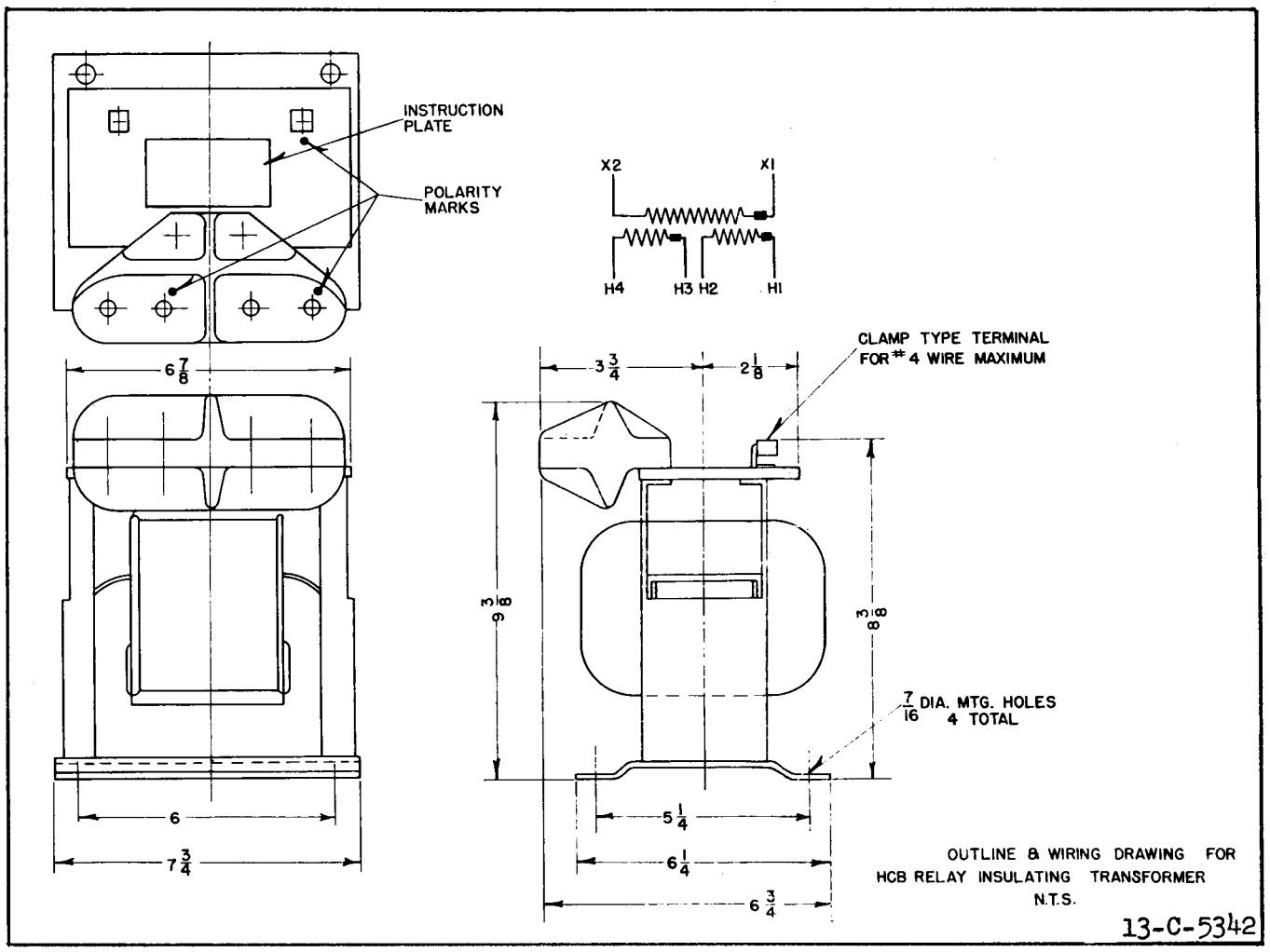

Fig. 15. Outline and Drilling Plan of HCB Relay Insulating Transformer.

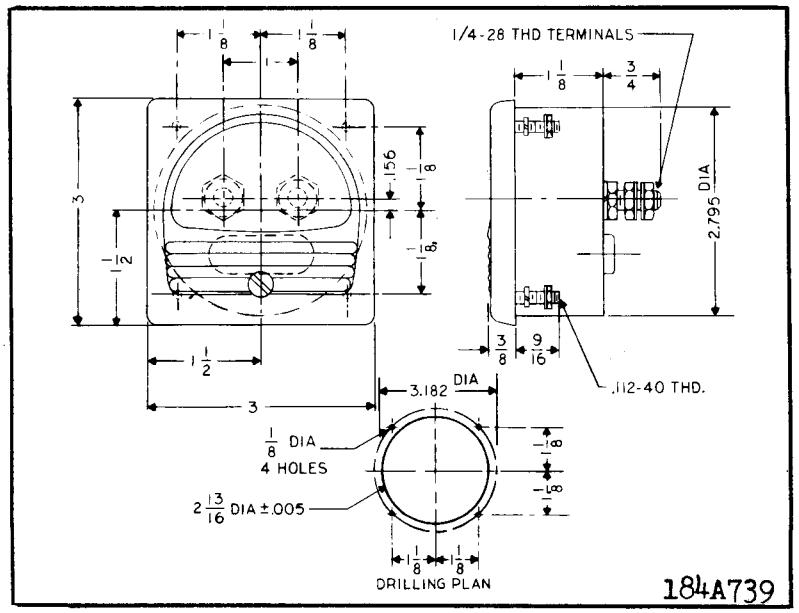

Fig. 16. Outline and Drilling Plan of the Semi-Flush-Type Test Milliammeter.

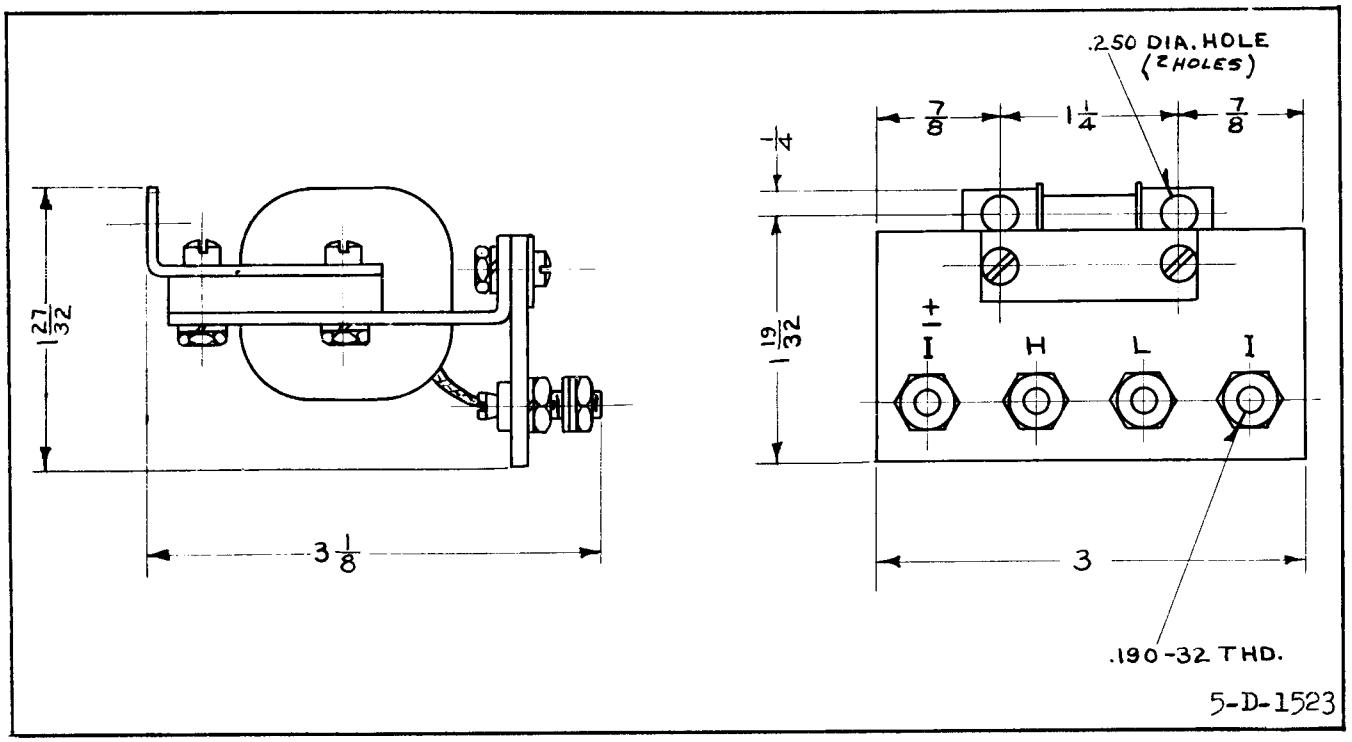

Fig. 17. Outline of the Test Milliammeter Auxiliary Transformer.

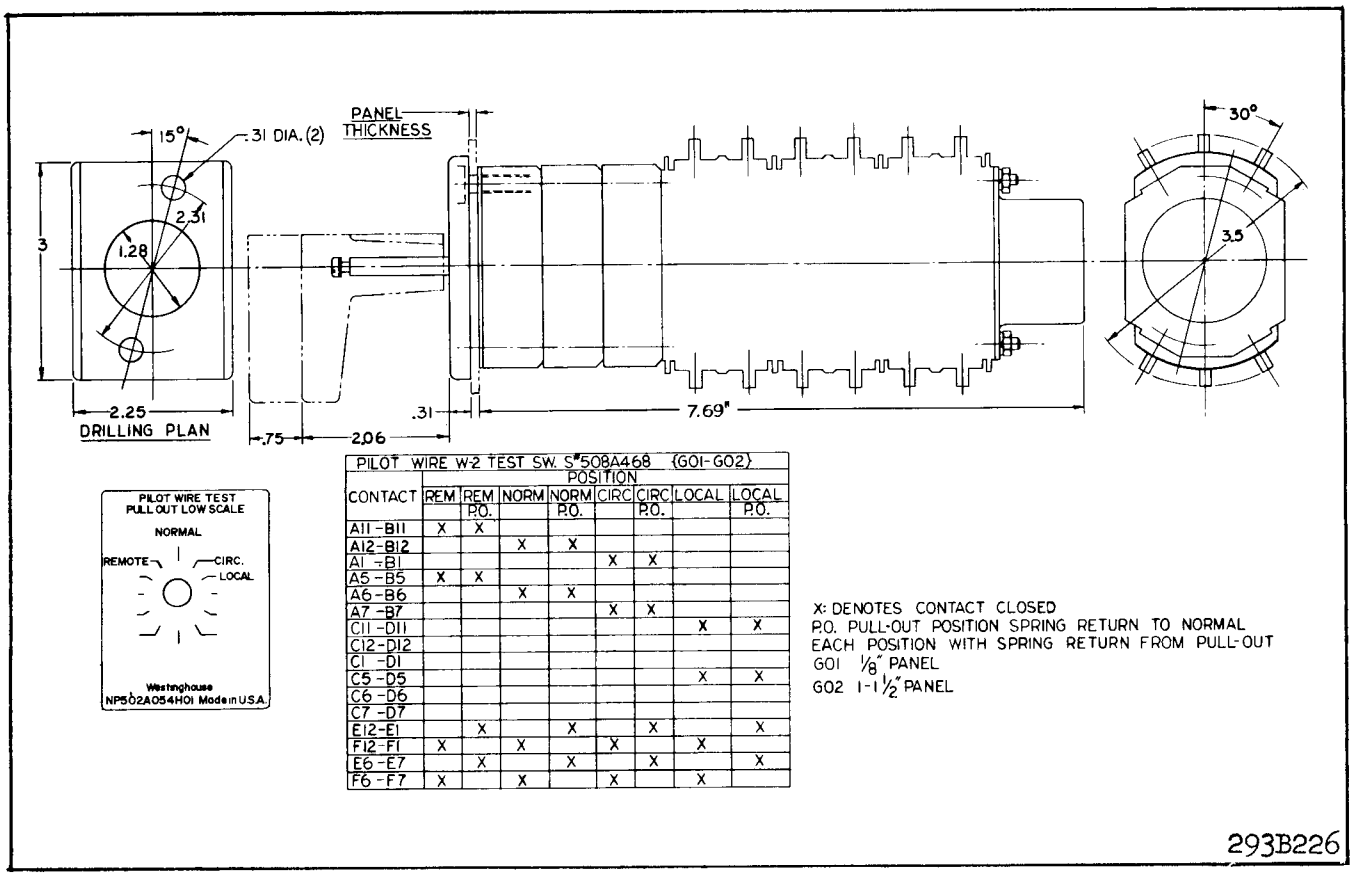

PILOT WIRE W-2 TEST SW. S#508A468 (G01-G02)								
	POSITION							
CONTACT	REM	REM P.O.	NORM	NORM P.O.	CIRC	CIRC P.O.	LOCAL	LOCAL P.O.
A11-B11	X	X						
A12-B12			X	X				
A1 -B1					X	X		
A5 -B5	X	X						
A6 -B6			X	X				
A7 -B7					X	X		
C11-D11							X	X
C12-D12								
C1 -D1								
C5 -D5							X	X
C6 -D6								
C7 -D7								
E12-E1		X		X		X		X
F12-F1	X		X		X		X	
E6 -E7		X		X		X		X
F6 -F7	X		X		X		X	

X: DENOTES CONTACT CLOSED
P.O. PULL-OUT POSITION SPRING RETURN TO NORMAL
EACH POSITION WITH SPRING RETURN FROM PULL-OUT
G01 1/8" PANEL
G02 1-1 1/2" PANEL

Fig. 18. Outline and Drilling Plan of the Type W-2 Test Switch.

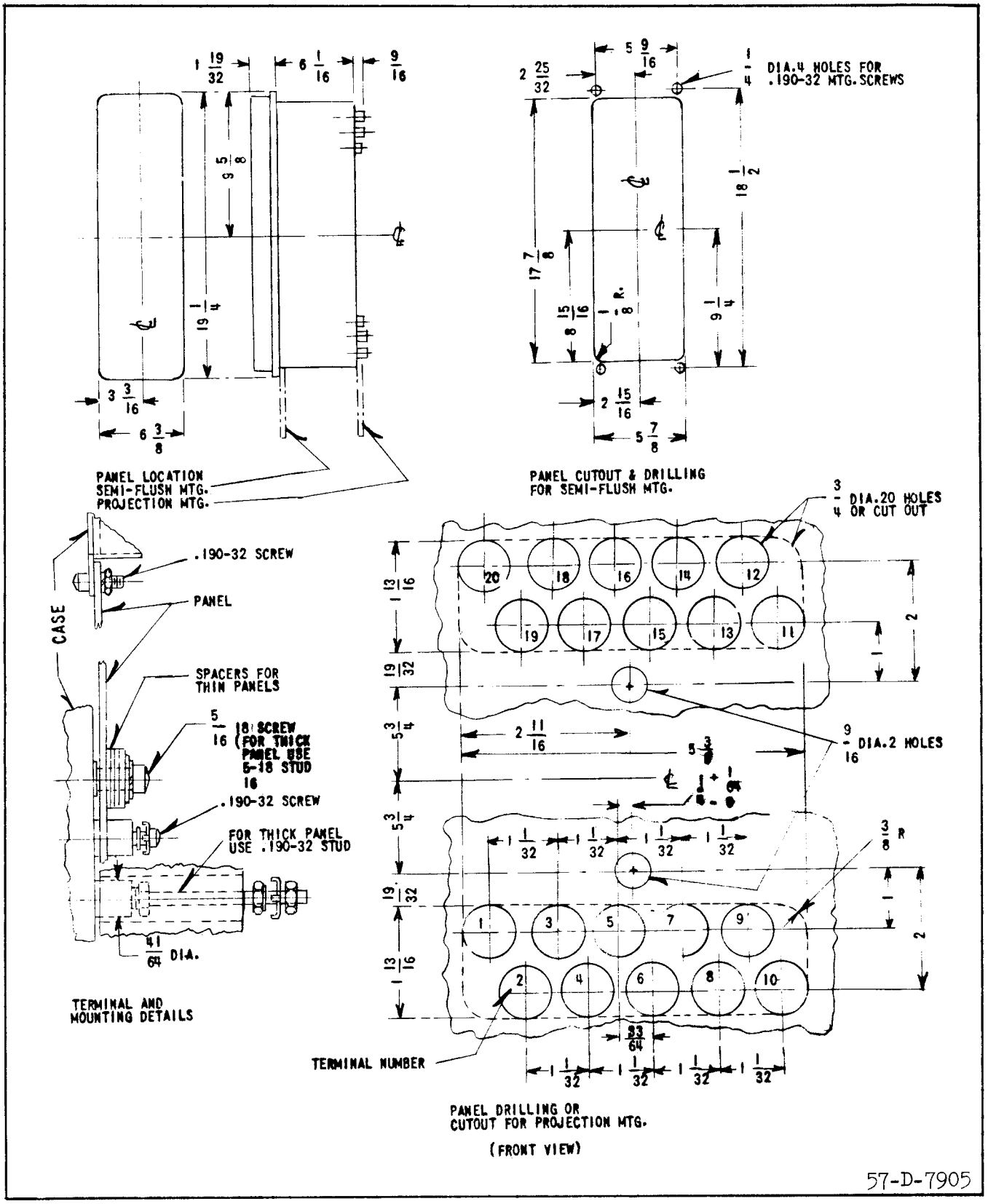

Fig. 19. Outline and Drilling Plan for the Type HCB Relay in the Type FT-42 Case.

PILOT-WIRE ENERGY

The current and voltage impressed on the pilot wire do not exceed 100 milliamperes and 60 volts. The wave form and magnitude of the pilot-wire current are such that telephone interference is within the limits allowed by the Bell Telephone Company. This permits the use of leased telephone lines as a pilot-wire channel.

RENEWAL PARTS

Repair work can be done most satisfactorily at the factory. However, interchangeable parts can be furnished to users who are equipped for doing repair work. When ordering parts, always give the complete nameplate data.

APPROXIMATE RESISTANCE VALUES OF COMPONENTS IN HCB RELAY

Transformer	Secondary Winding		Start to Tap 20 to 30 ohms
			Start to Finish 110 to 140 ohms
Polar Unit	Operating Coil		290 - 320 ohms
Polar Unit	Restraining Coil	Maximum	12 - 16 ohms
		Minimum	9 - 12 ohms
* Resistor	Rc		41 - 44 ohms
Tube Resistor	Ro		As Marked on Ro Tap Plate
Looped Resistor	R1		As Marked on R1 Tap Plate
	R1A		As Marked on R1A Tap Plate
* Rectifiers			IN91 Germanium Diodes
Indicating Contactor Switch			0.2 amp. Tap 6.5 ohms
			2.0 amp. Tap 0.15 ohms

*R_C used in conjunction with 1N91 germanium diodes in order to match characteristics of relay with older style HCB relay using copper oxide rector type rectifiers.

WESTINGHOUSE ELECTRIC CORPORATION

RELAY-INSTRUMENT DIVISION **NEWARK, N. J.**

Printed in U.S.A.

INSTALLATION • OPERATION • MAINTENANCE

INSTRUCTIONS

TYPE HCB PILOT WIRE RELAY SYSTEM

CAUTION Before putting protective relays into service, remove all blocking which may have been inserted for the purpose of securing the parts during shipment, make sure that all moving parts operate freely, inspect the contacts to see that they are clean and close properly, and operate the relay to check the settings and electrical connections.

APPLICATION

The type HCB relay is a high speed pilot wire relay designed for the complete phase and ground protection of two and three terminal transmission lines. Simultaneous tripping of the relay at each terminal is obtained in about 20 milliseconds for all faults. A complete installation for a two terminal line consists of two relays, two insulating transformers, and an interconnecting pilot wire circuit. For a three terminal line, three relays, three insulating transformers, and a wye-connected pilot wire circuit with branches of equal series resistance are required.

CONSTRUCTION

The relay consists of a combination positive and zero phase sequence filter, a saturating auxiliary transformer, two full wave rectifier units, a polar type relay unit, a neon lamp, and an indicating contactor switch (ICS), all mounted in a single case. The external equipment normally supplied with the relay consists of an insulating transformer, a milliammeter and test switch.

SEQUENCE FILTER

The sequence filter consists of a three-legged iron core reactor and a set of resistors designated R1 and Ro. The reactor has three windings; two primary and a tapped secondary winding, wound on the center leg of a "F" type of lamination. The secondary taps are wired to the circularly arranged R1 tap connections in the front of the relay. The R1 tap links also connect to the R_1 resistor (looped resistance wire). Ro consists of three tube resistors with taps wired to the circularly arranged Ro tap connections in the front of the relay. R_{1A} taps are on the R_1 resistance wire and are wired to the circularly arranged R_{1A} tap connections in the front of the relay.

SATURATING TRANSFORMER

The output of the sequence filter connects to the primary of a two-winding saturating transformer. The primary winding is tapped and wired to a tap block T in the front of the relay. The secondary winding is connected to the neon lamp and from a fixed tap to the relay coil circuits.

POLAR RELAY UNIT

This unit consists of a rectangular-shaped magnetic frame, an electromagnet, a permanent magnet, and an armature with either one or two contacts. The poles of the cresent-shaped permanent magnet bridge the magnetic frame. The magnetic frame consists of three pieces joined in the rear with two brass rods and silver solder. These non-magnetic joints represent air gaps which are bridged by two adjustable magnetic shunts. The operating and restraint windings are concentrically wound around a magnetic core. The armature is fastened to this core at one end and floats in the front air gap at the other end. The moving contact is connected to the free end of a leaf spring.

RESTRAINT TAPS

A set of restraint taps are located on the front of the relay near the polar unit. These taps are the maximum and minimum restraint taps of the relay.

INDICATING CONTACTOR SWITCH UNIT (ICS)

The d-c indicating contactor switch is a small clapper-type device. A magnetic armature, to which leaf-spring mounted contacts are attached, is attracted to the magnetic core upon energization of the switch. When the switch closes, the moving contacts bridge two stationary contacts, bypassing the main relay contacts. Also during this operation, two fin-

SUPERSEDES I.L. 41-971.2B
*Denotes change from superseded issue.

EFFECTIVE MAY 1967

gers on the armature deflect a spring located on the front of the switch, which allows the operation indicator target to drop. The target is reset from the outside of the case by a push rod located at the bottom of the cover.

The front spring, in addition to holding the target, provides restraint for the armature, and thus controls the pick-up value of the switch.

OPERATION

The connection of the HCB system of relays to the protected transmission line is shown in Fig. 8. In such a connection, the relays operate for faults within the line terminals but not for faults external to the protected transmission line. This is accomplished by comparing the relative polarities of voltages at opposite ends of the transmission line by means of a metallic pilot wire.

As shown in Figure 8, the composite sequence filter of each HCB relay receives three phase current from the current transformers of the transmission line. The composite sequence filter of the HCB converts the three-phase current input into a single-phase voltage output, V_F, of a magnitude which is an adjustable function of the phase A positive and zero sequence current. This voltage, V_F, is impressed on the primary wiring of the saturating transformer. The saturating transformer output voltage, V_S, is applied to the relay coils and to the pilot wire through an insulating transformer. The saturating transformer and a neon lamp across its secondary winding serve to limit the energy input to the pilot wire.

During an external fault, assuming matched relays, the magnitude of V_S at both stations will be the same. The relative polarities of the V_S voltages will be as shown in Figure 4. Since the voltages add, most of the current will circulate through the restraint coils and the pilot wire, with a minimum of operating coil current. The relative effects of the operating and restraint coil currents are such that the relay is restrained.

During an internal fault, the relative V_S polarities reverse. Since the V_S voltages now oppose each other, most of the current flowing in the restraint coils is also forced through the operating coils with a minimum of current in the pilot wire. This increase in operating current overcomes the restraining effect and both the relays operate.

Within limits, as defined in Figure 7 and under "Characteristics," all the relays will operate for an internal fault regardless of the fault current distribution at the various stations. The nominal pickup (total internal fault current) of the relaying system is equal to the minimum trip of a single relay multiplied by the number of relays. For example, if the pickup of each relay, with the pilot wire open, is 6 amperes, a two terminal line system has a nominal pickup of 2 x 6 = 12 amperes.

PILOT WIRE EFFECTS

In Figure 4 it can be seen that a short-circuited pilot wire will short circuit the relay operating coils. Depending on the location of the short, at least one of the relays will fail to trip during an internal fault. If the pilot wire is open circuited, almost all the restraint coil current will flow through the operating coil and the relay operates as an over-current device.

Excessive pilot wire series impedance will approach an open-circuited condition and the relays will operate during external faults. Excessive pilot wire shunt capacitance will approach a short-circuited condition and the relays will not operate.

OPERATING UNIT THEORY

The polar unit flux paths are shown in Figure 5. With balanced air gaps, the permanent magnet produces flux flowing in two paths, one through the front gaps and one through the rear gaps. This flux produces north and south poles, as shown. By turning the left shunt in, some of the flux is forced through the armature, making it a north pole. Thus, reducing the left-hand rear gap will produce a force tending to pull the armature to the right. Similarly, reducing the right-hand gap will produce a force tending to pull the armature to the left.

CHARACTERISTICS

The voltage, V_F, impressed by the filter upon the saturating transformer is:

$$V_F = 2I_{A1} R_1 + I_{A0} (R_1 + 3R_0) \text{ volts} \qquad (1)$$

where R_1 and R_0 are the positive and zero sequence tap values, respectively;

I_{A1} and I_{A0} are the positive and zero sequence phase A current inputs, respectively, in amperes. *These are vector quantities.*

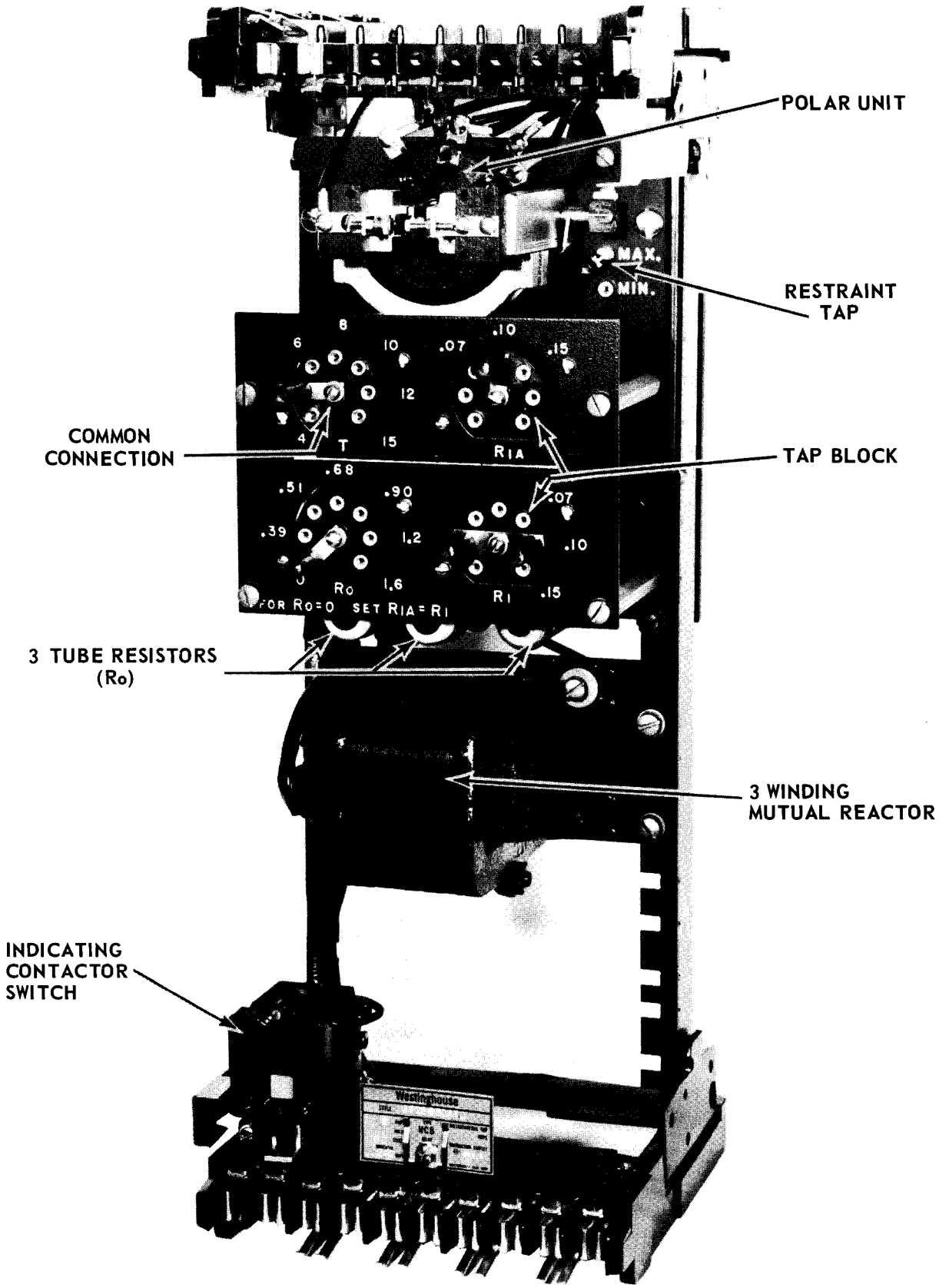

Fig. 1. Type HCB Relay Without Case (Front View).

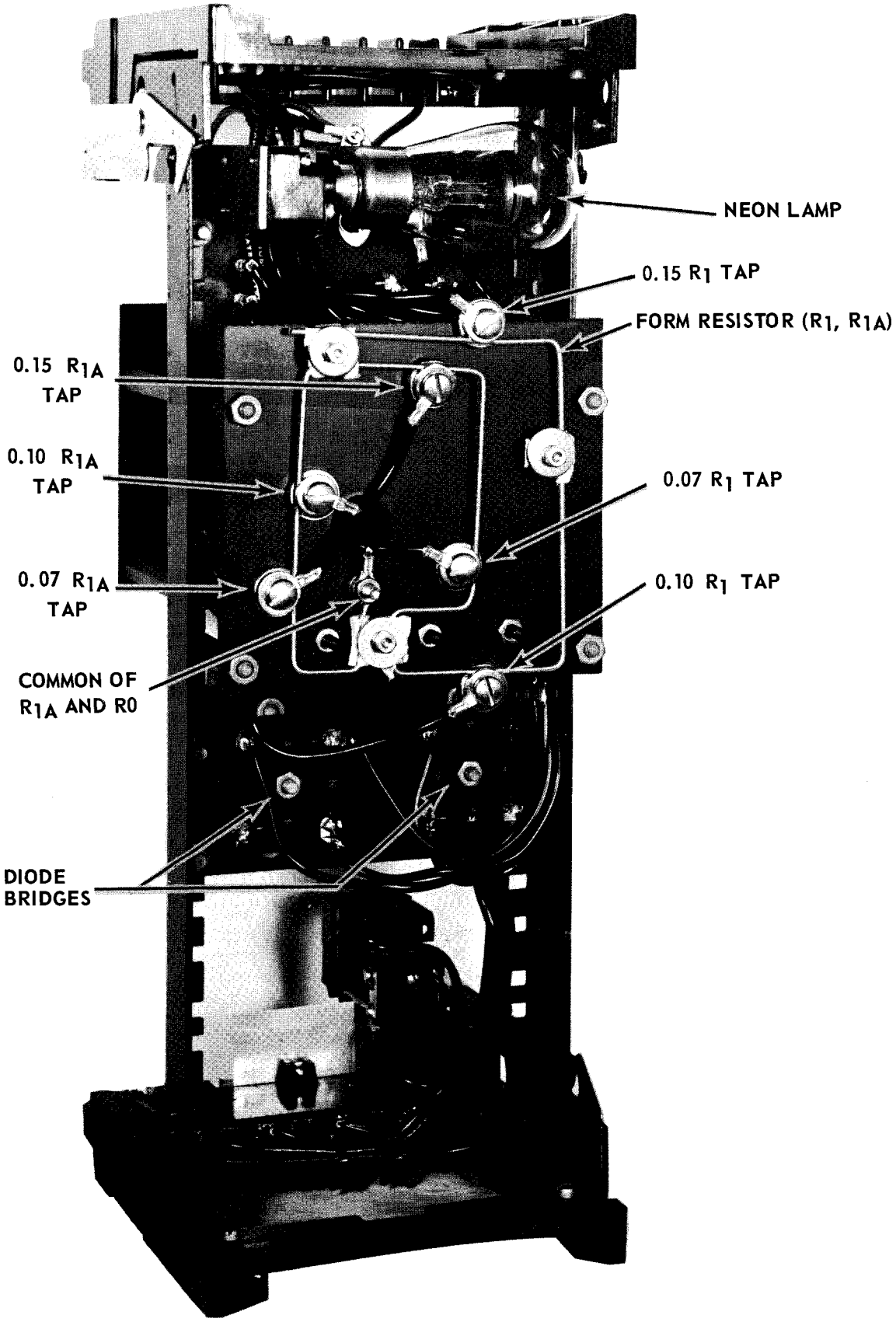

* *Fig. 2 Type HCB Relay Without Case (Rear View).*

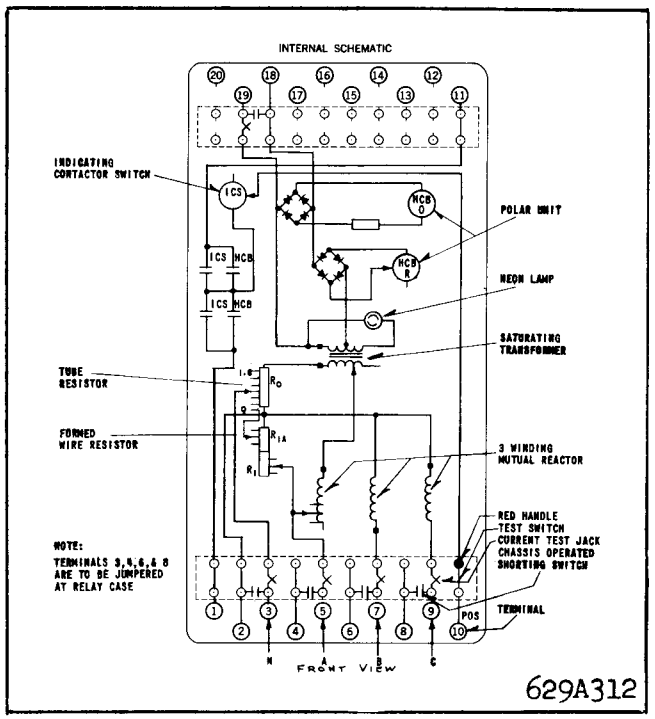

Fig. 3. Internal Schematic of the Type HCB Relay in FT-42 Case (Double Trip Circuit). For the Single Trip Relay the Circuits Associated with Terminal 11 are omitted.

SINGLE RELAY PICKUP (PILOT WIRE OPEN) I_S

Single relay pickup, I_S, is defined as the phase current required to operate one relay with the pilot wire side of the insulating transformer open circuited (H1-H4). The single relay pickup point in terms of filter voltage is:

$$V_F = 0.2T \qquad (2)$$

where T is the saturating transformer tap value. Single relay pickup is defined by equating (1) & (2):

$$0.2T = 2\, I_{A1}\, R_1 + I_{A0}\,(R_1 + 3R_0) \qquad (3)$$

Current I_S varies with the type of fault. For example, for a 3 phase fault, $I_S = I_{A1}$, since only positive sequence current is present. Substituting $I_S = I_{A1}$ in Eq. (3) & rearranging, the 3 phase fault pickup is:

$$I_S = I_{A1} = \frac{0.2T}{2\,R_1} = \frac{T}{10R_1} \text{ (3 phase fault)} \qquad (4)$$

If $R_1 = 0.1$, $R_0 = 1.6$ & $T = 4$:

$$I_S = \frac{T}{10R_1} = \frac{4}{10X0.1} = 4 \text{ amp. (3 phase fault)}$$

For a phase A to ground fault, if $I_{A1} = I_{A2} = I_{A0}$ (I_{A2} is the phase A negative sequence current):

$$0.2T = 2I_{A1}\, R_1 + I_{A1}\,(R_1 + 3R_0)$$

$$I_{A1} = \frac{0.2T}{3(R_1 + R_0)} = I_{A0}$$

But: $I_S = I_{A1} + I_{A2} + I_{A0}$

$= 3I_{A1}$

$$\text{So: } I_S = 3I_{A1} = \frac{0.2T}{R_1 + R_0} \text{ (A-G fault)} \qquad (5)$$

If $R_1 = 0.1$, $R_0 = 1.6$ & $T = 4$:

$$I_S = \frac{0.2T}{R_1 + R_0} = \frac{0.2x4}{0.1 + 1.6}$$

$$= \frac{0.8}{1.7} = 0.471 \text{ amp. (A-G fault)}$$

NOMINAL PICKUP (ALL RELAYS)

The nominal pickup, I_{nom}, is defined as

$$I_{nom} = KI_S \qquad (6)$$

where I_{nom} = total internal fault current
K = number of relays (2 or 3)
I_S = single-relay pickup with pilot wire disconnected (see above)

For example, for a phase-A-to-ground fault, $I_{A1} = I_{A0}$ with the pilot wire open circuited, the single-relay pickup was previously determined as $I_{AG} = 0.471$ ampere. For a two-terminal line, the nominal pickup for a phase-A-to-ground fault ($R_1 = 0.1$; $R_0 = 1.6$; $T = 4$) is:

$$I_{nom} \text{ (A to G)} = 0.471K = 0.471 \times 2 = 0.942 \text{ ampere.}$$

MINIMUM TRIP (ALL RELAYS)

With equal inputs to all relays and zero pilot-wire shunt capacitance, the relays will operate at their nominal pick-up point. The minimum trip points will vary somewhat from nominal value, depending on the pilot-wire constants and the magnitude and phase angle of the various relay input currents. For example, Figure 6 shows the relay operating points for a two-terminal line, assuming input current to the near relay, only.

An example of the characteristics with various current distributions is shown in Figure 7. The filter

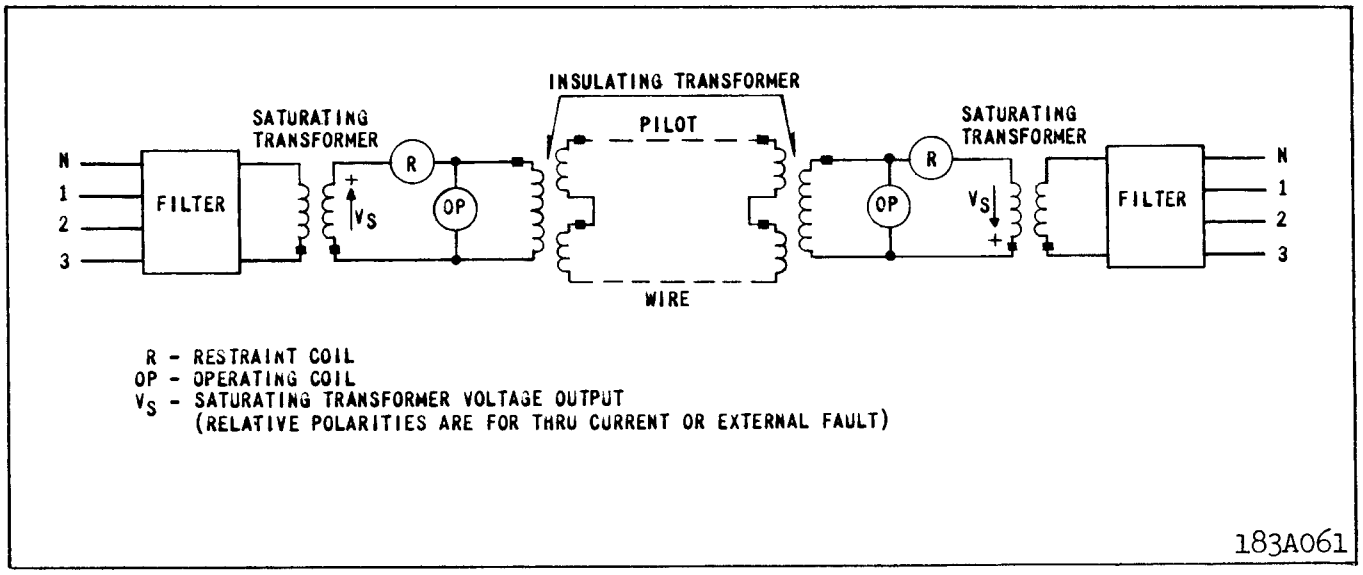

Fig. 4. Simplified External Schematic of the HCB Relay System.

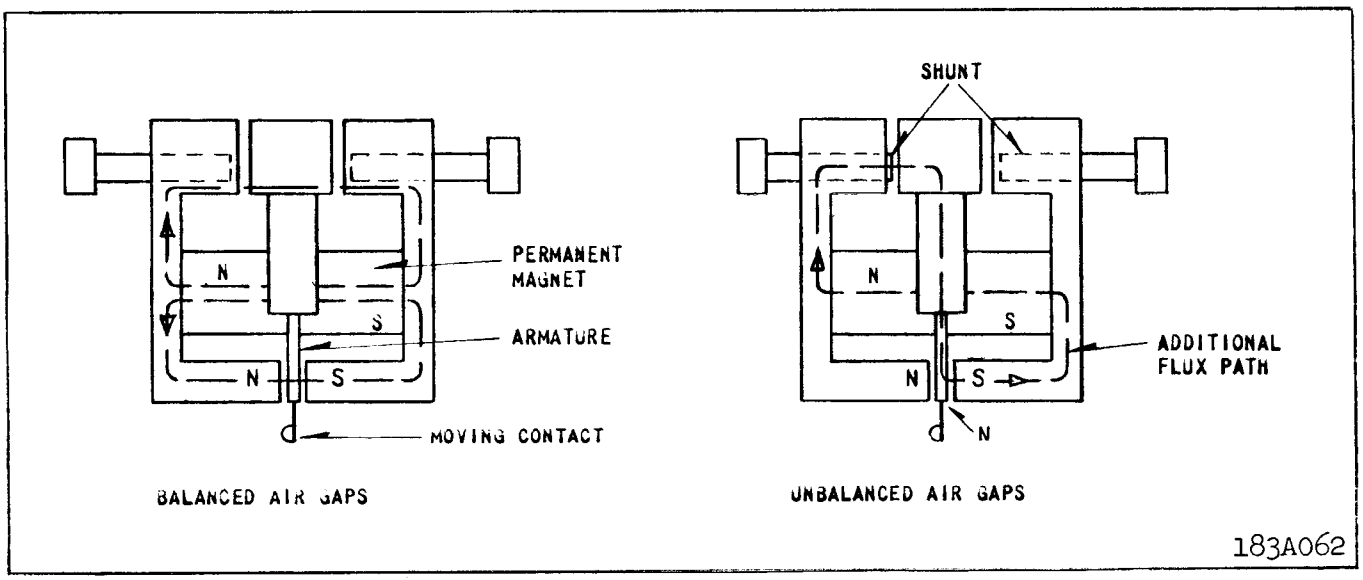

Fig. 5. Polar Unit Permanent Magnet Flux Paths.

output voltage, V_F, of each relay, as defined by equation (1) must be in phase or 180 degrees out of phase, in order for Figure 7 to apply.

INSULATING TRANSFORMER

Unless otherwise noted, all characteristics presented include an insulating transformer with each relay. Two ratios are available: 4/1 and 6/1. The high voltage side is connected to the pilot-wires.

PILOT-WIRE REQUIREMENTS

The relays should not be applied with pilot-wire series resistance or shunt capacitance exceeding the following values:

TABLE I

No. of Relays	Insulating Transformer Ratio			
	4/1		6/1	
	R_L	C_S	R_L	C_S
2	2000	1.5	—	—
3	500/LEG	1.8	1000/LEG	0.75

R_L = series loop resistance in ohms.

C_S = total shunt capacitance in microfarads.

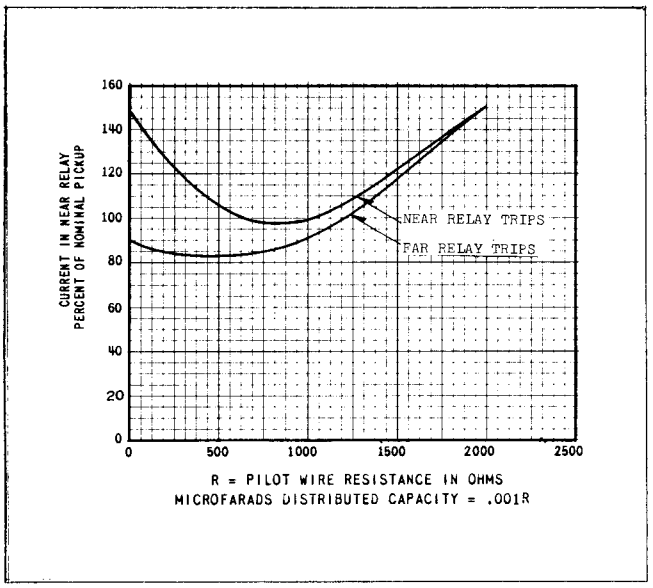

Fig. 6 Typical Curves Showing the Effect of the Pilot Wire on Minimum Trip Current, Two-Terminal Line (Maximum Restraint Tap). Insulating Transformer 4/1 ratio.

Where the shunt capacitance exceeds the above amount, it may be feasible in some cases to provide shunt reactors to compensate for the excessive capacitance. The amount of capacitance which can be compensated is limited and varies depending upon the magnitude of the pilot-wire distributed effect.

A shielded, twisted pilot wire pair, preferably of #19 AWG or larger, is recommended; however, open wires may be used if they are frequently transposed in areas of exposure to power circuit induction. The voltage impressed across either insulating transformer (H-1 to H-4) as a result of induction or a rise in station ground potential, should be less than 7.5 volts to prevent undesired relay operation.

For three-terminal applications, the loop resistance of all legs of the pilot wire must be balanced within 5 percent, with variable resistors as shown in Figure 8. The pilot wire resistance to be balanced is divided by 16 and 36 for the 4 to 1 and 6 to 1 ratio insulating transformers respectively, since the balancing resistors are located on the relay side of the insulating transformers.

Induced voltages and rises in station-ground potential may be handled by the following means:

a) Neutralizing reactors may be connected in series with the pilot wire to hold the pilot wire potential close to the remote ground potential in the presence of a rise in station-ground potential. They do not limit pilot-wire voltages to safe values in the presence of a longitudinal induced voltage. When using the neutralizing reactor, the pilot-wire sheath should be insulated from station ground to minimize sheath-to-pair potential in the presence of a rise in station-ground potential. All other pairs in the cable which are connected to station ground should also be protected with neutralizing reactors to minimize pair-to-pair voltages.

b) Drainage reactors may be connected across the pilot wire and to ground through a KX642 protector tube. The drainage reactor is particularly effective in limiting pair-to-ground voltage in the presence of an induced voltage. When the tube flashes, both wires are connected to ground through the drainage reactor windings which offer a low impedance to ground but maintain a high impedance to an a-c voltage across the wires. Thus, the HCB system will operate normally even though the protector tube has flashed over. The drainage reactor is not intended to handle a rise in ground potential.

c) The neutralizing and drainage reactors may be utilized together. If the neutralizing reactor is to be of any value, the drainage reactor through the KX642 protector tube must be connected to remote ground.

TRIP CIRCUIT

The main contacts will safely close 30 amperes at 250 volts d.c., and the seal-in contacts of the indicating contactor switch will safely carry this current long enough to trip a circuit breaker.

The indicating contactor switch has two taps that provide a pick-up setting of 0.2 or 2 amperes. To change taps requires connecting the lead located in front of the tap block to the desired setting by means of a screw connection.

SETTINGS

There are four settings in the relay. The correct tap setting should be determined as outlined under "Setting Calculations".

1) Restraint taps-maximum or minimum
   To change taps, connect the lead in front of the relay to the correct tap.

2) T tap- 4, 5, 6, 8, 10, 12, and 15
   To change taps, loosen center screw and move tap link to desired setting. Tap screw and center screw to be tight after tap change is made.

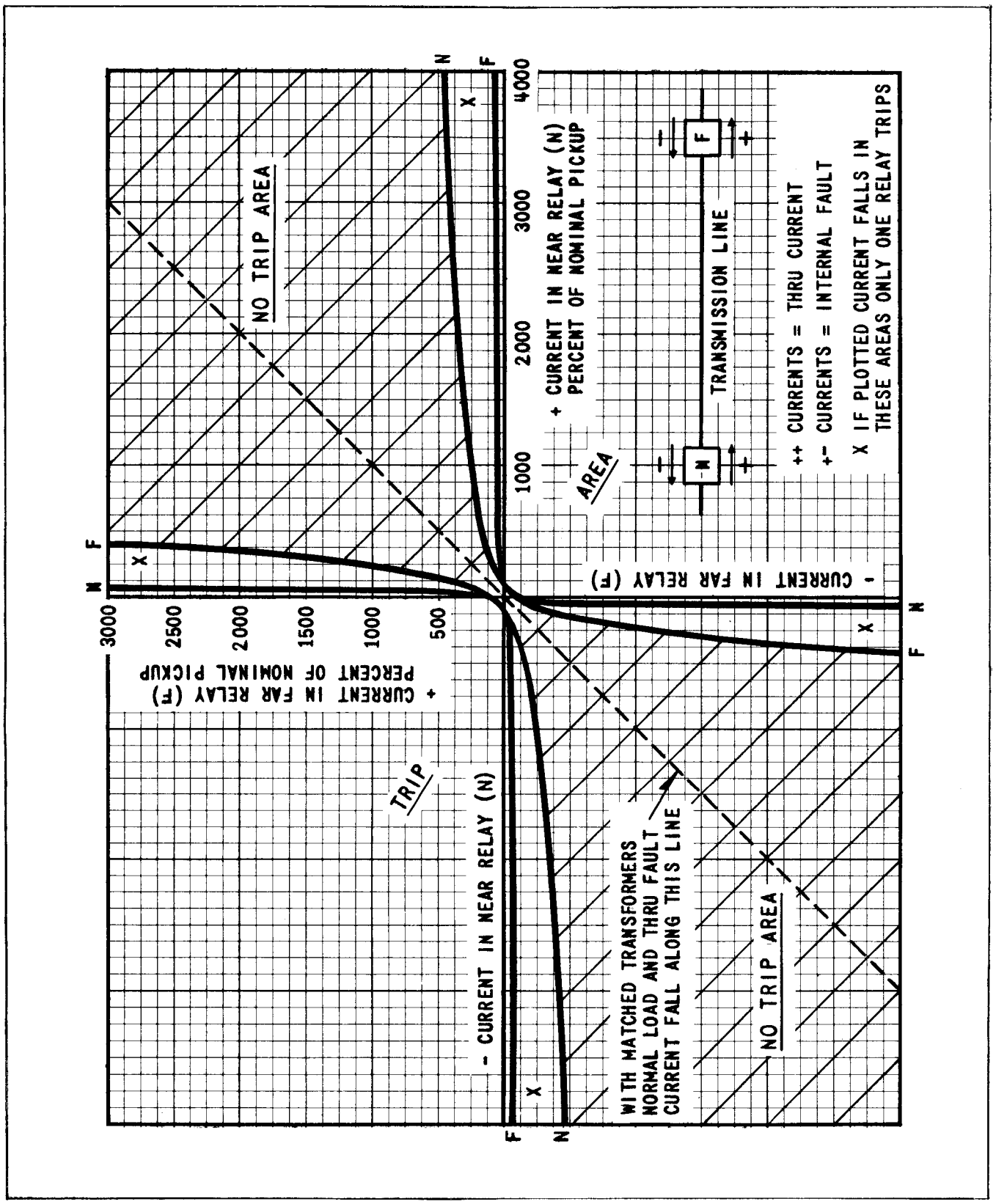

Fig. 7 Typical Operating Characteristics of the HCB Relay System – Maximum Restraint Tap, with 4/1 Insulating Transformers and 2000-Ohm Pilot Wire. V_F of Near and Far Relays in Phase or 180° Out of Phase.

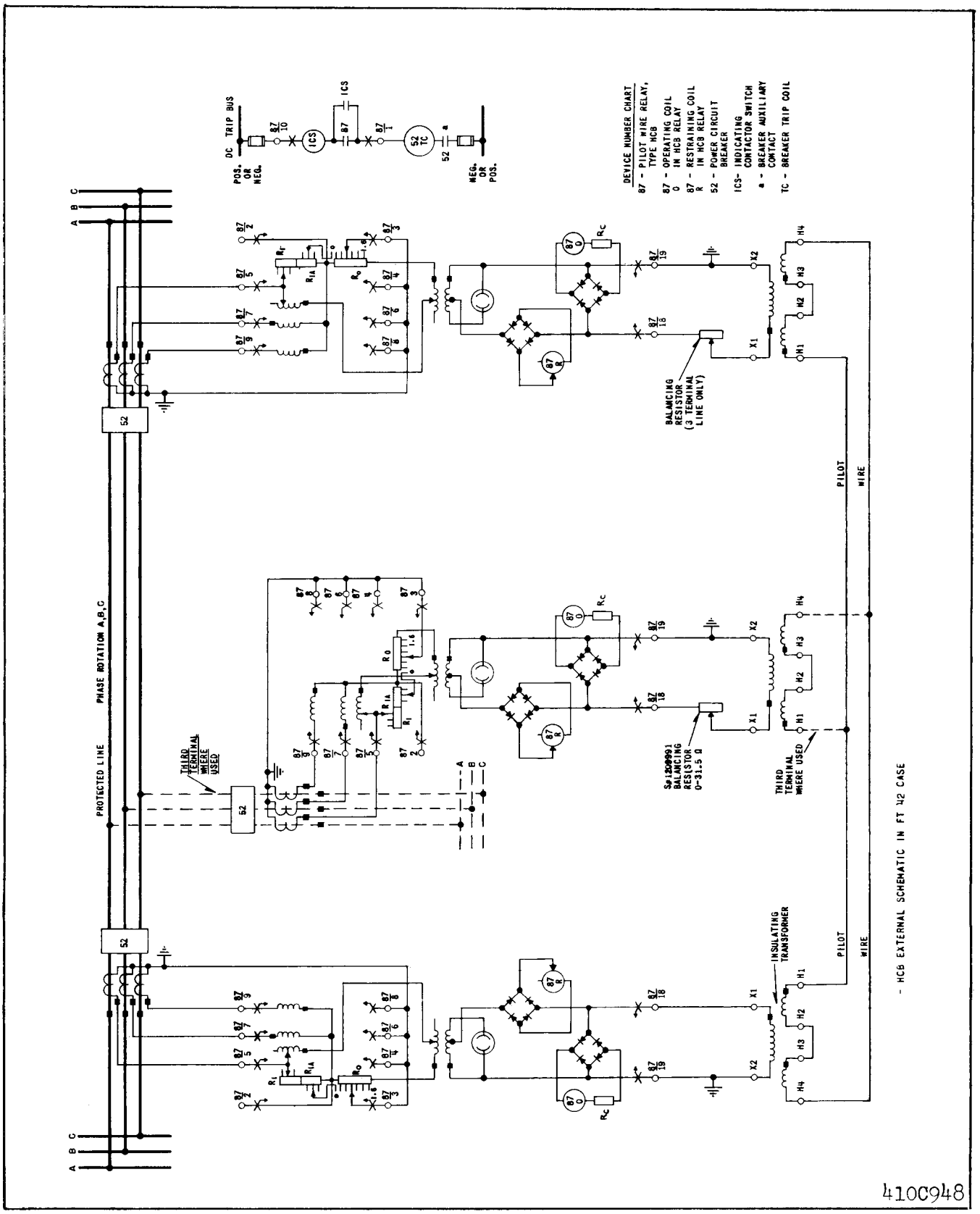

Fig. 8. External Schematic of the Type HCB Relay in FT-42 Case - Two- or Three-Terminal Line.

3) R_1 tap- 0.07, 0.10, 0.15
To change taps, loosen center screw and move tap link to desired setting. Insert two tap screws at each end of the tap link and tighten center screw as well as two tap screws.

4) Ro tap– 0.39, 0.51, 0.68, 0.90, 1.2 and 1.6
To change taps, loosen center screw and move tap link to desired tap. Tap screw and center screw to be tight after tap change is made.

5) Ria Taps – (0.07, 0.10, 0.15)
Note: It is recommended that these taps be set in the same tap as the R_1 tap for all applications.

To change taps, loosen center screw and move tap link to desired tap. Tap screw and center screw to be tight after tap change is made.

INDICATING CONTACTOR SWITCH (ICS)

The only setting required on the ICS is the selection of the 0.2 or 2.0 ampere tap setting. This selection is made by connecting the lead located in front of the tap block to the desired setting by means of the connecting screw.

SETTING CALCULATIONS

The HCB relay has four sets of taps: R_1, T, R_0, and restraint taps. The following discussion establishes limits for the various tap settings under different operating conditions. It should be kept in mind that settings to obtain operation on minimum internal fault conditions are based on the total fault current that flows into the protected line from all terminals.

TERMS

R_1, T, R_0 – Relay taps

I_{3p} – total minimum internal 3-phase secondary fault current fed from all terminals. divided by the number of terminals (2 or 3)

I_L – maximum secondary load current flowing through the protected line.

I_g – total minimum secondary ground fault current fed into the protected line from all terminals, divided by the number of terminals.

$I_{nom.}$(P-P) – nominal internal phase to phase fault sensitivity.

$I_{nom.}$(P-G) – nominal internal line to ground fault sensitivity.

R_{Nc} (I), R_{Nc} (II) – current transformer ratio at Station I and II respectively.

PHASE FAULT SENSITIVITY

The phase fault pickup is determined by the R_1 and T taps. In order to operate on the minimum line-to-line fault current, the R_1 and T taps should be set for not more than:

$$\frac{T}{R_1} = 5I_{3P} \qquad (7)$$

In order to prevent operation on load current if the pilot wires become open circuited, the R_1 and T taps should be set for not less than:

$$\frac{T}{R_1} = 10I_L \qquad (8)$$

The available taps are:

R_1: 0.07, 0.10, and 0.15

T : 4, 5, 6, 8, 10, 12, and 15

Where sufficient fault current is available, it is recommended that the relays be set as follows:

$$\frac{T}{R_1} = 1.25 \times 10I_L = 12.5I_L \qquad (9)$$

The required T/R_1 ratio may be obtained by any combination of T and R_1. However, the T tap must be set the same at all stations. The R_1 taps may be utilized to compensate for different CT ratios with two-terminal lines if the pilot-wire loop resistance is 1000 ohms or less. Auxiliary CT's and identical R_1 tap settings must be used with different main CT ratios on all three-terminal lines and on two-terminal lines with more than 1000 ohms loop resistance in the pilot wire.

GROUND FAULT SENSITIVITY

The ground fault pickup is determined by R_0 and T taps. (T should be determined by the phase setting.) In order to operate on the minimum line-to-ground fault current, the R_0 tap setting should be not less than:

$$R_0 = \frac{0.2T}{I_g} \qquad (10)$$

The available R_0 taps are: 0.39, 0.51, 0.68, 0.90, 1.2, and 1.6.

The R_{1A} taps, 0.07, 0.10, and 0.15, are utilized to set $R_0 = 1/3\ R_1$, where no zero sequence sensitivity is desired. Equation (10) does not apply for these three taps.

For overhead lines, it is recommended that the 1.6 R_0 tap be used to obtain maximum sensitivity.

For cable circuits, where the line charging current exceeds 5% of nominal pickup current, set R_0 for about:

$$R_0 = \frac{T}{7.5}$$

The R_0 taps need not be identical as required with the R_1 taps for three terminal lines and two terminal lines over 1000 ohms pilot wire resistance, where the zero sequence relay currents at the line terminals are not identical for an external fault. However, for a conventional line section the R_0 taps are set in the same proportion as are the R_1 taps.

RESTRAINT TAP

Set in maximum restraint tap for all two-terminal lines. Set in minimum restraint tap for all three-terminal lines. The use of maximum restraint on two terminal applications allows the relay to be used for all pilot wires as indicated in Table I. The use of minimum restraint on three terminal applications compensates for the desensitizing effect of a third terminal.

Note: The relay pick-up calibration must be changed if set in the minimum restraint tap. See "Adjustments and Maintenance."

TAPPED LOADS

Where one transformer bank is tapped to a line protected with two HCB relays, the critical point is to set above the fault current flow for a fault on the other side of the bank. Set the R_1 and T taps for not less than:

$$\frac{T}{R_1} = 5I_{3PL} \qquad (11)$$

where I_{3PL} = total current for a 3-phase fault on the low side of the bank.

Note that the tapped bank must not act as a ground source for high-side faults (e.g. high side connected in delta). Ordinarily this means that the R_0 tap settings need not be changed, since no zero-sequence current flows in the line when the low side is grounded.

SETTING EXAMPLE

CASE I

Assume:

Two-terminal line.

CT ratio =	600/5
Full-load current = I_L =	400A
Minimum 3-phase internal fault current:	
Through Station I =	1500A
Through Station II =	2500A
Minimum internal line-to-ground fault current:	
Through Station I =	400A
Through Station II =	0

Phase fault pickup:

$$\frac{T}{R_1}(\text{maximum}) = 5I_{3P} = 5 \times \frac{1500 + 2500}{2} \times \frac{5}{600} = 83.3$$

$$\frac{T}{R_1}(\text{maximum}) = 10I_L = 10 \times 400 \times \frac{5}{600} = 33.3$$

The phase fault current is sufficient to allow the relay to be set to prevent tripping on an open-circuited pilot wire. Therefore, set:

$$\frac{T}{R_1} = 12.5I_L = 41.7.$$

Set both relays for: $T = 4$, $R_1 = 0.1$.

The nominal pick-up current from equation 6 for a phase-to-phase fault is:

$$I_{nom}(P\text{-}P) = \frac{T}{2.89R_1} = \frac{4}{0.289} = 13.8 \text{ amperes,}$$

$$\left[I_{nom}(P\text{-}P) = \frac{T}{1.92R_1} \text{ for three-terminal lines}\right]$$

Ground fault pickup:

$$R_0\ (\text{minimum}) = \frac{0.2T}{I_g} = \frac{0.2 \times 4}{400/2} \times \frac{600}{5} = 0.48$$

An R_0 tap exceeding 0.48 will provide tripping. As recommended for overhead lines:

Set $R_0 = 1.6$.

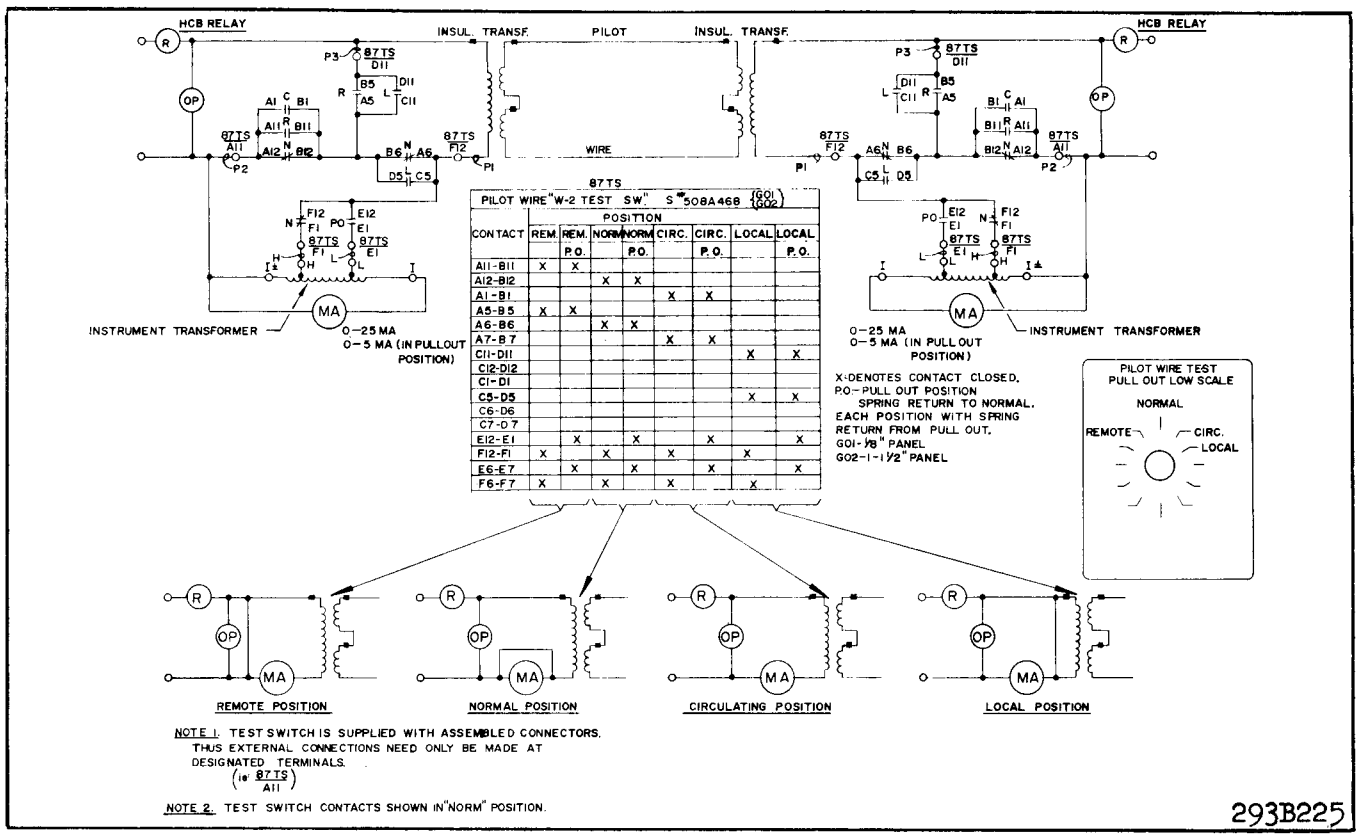

Fig. 9. HCB Relay Test Circuits with S#508A468601-G02 Type W-2 Switch and S#291B318A09 Milliammeter 0- 5-25 ma.

The ground fault nominal pickup is:

$$I_{nom}(P\text{-}G) = \frac{0.4T}{R_O + R_1} = \frac{1.6}{1.6} = 1.0 \text{ ampere,}$$

$$\left[I_{nom}(P\text{-}G) = \frac{0.6T}{R_O + R_1} = \text{for three-terminal lines}\right]$$

Restraint tap.

Use maximum restraint tap.

CASE II (DIFFERENT CT RATIOS)

Assume 400/5 CT's at Station II and 600/5 CT's at Station I, with less than 1000 ohms pilot wire loop resistance.

At Station I, set $R_O = 1.6$ as in Case I. However, set $R_1 = 0.15$ to obtain R_1 settings proportional to the CT ratio. From equation 9:

$$T = 12.5 R_1 I_L = 12.5 \times 0.15 \times 400 \times \frac{5}{600} = 6.25$$

Set T = 8

Station II settings are:

$$* \; R_1 = 0.15 \frac{R_{Nc}(II)}{R_{Nc}(I)} 0.15 \times \frac{400}{600} = 0.10$$

T = 8 (Same as Station I)

$$R_O = 1.6 \times \frac{400}{600} = 1.07 \text{ (Set 1.2)}$$

INSTALLATION

The relays should be mounted on switchboard panels or their equivalent in a location free from dirt, moisture, excessive vibration, and heat. Mount the relay vertically by means of the four mounting holes on the flange for semi-flush mounting, or by means of the rear mounting stud or studs for projection mounting. Either a mounting stud or the mounting screws may be utilized for grounding the relay. The electrical connections may be made directly to the terminals by means of screws for steel panel mounting or to the terminal studs furnished with the relay for thick panel mounting. The terminals studs may be easily removed or inserted by locking two nuts on the stud and then turning the proper nut with a wrench.

For detailed Flexitest case information, refer to I.L. 41-076.

ADJUSTMENTS AND MAINTENANCE

CAUTION *Make sure that the neon lamp is in place whenever relay operation is being checked.*

ACCEPTANCE TESTS

The following tests are recommended when the relay is received from the factory. If the relay does not perform as specified below, the relay either is not calibrated or it contains a defect.

Main Unit

Connect the relay to the insulating transformer, as shown in Figure 8, and set $R_1 = 0.10$, $R_0 = 1.6$, $T = 4$, and maximum restraint tap. With the insulating transformer terminals H1 and H4 open circuited, measure the minimum pick-up current, I_{79} (min.), with current applied through terminals 7 and 9. This value should be:

$$I_{79} \text{ (min.)} = 6.94 \pm 5\% \text{ amperes.}$$

Now, connect a resistance, R_{PW}, across H1 and H4 of the insulating transformer, with a 10-mfd capacitor connected between H2 and H3. Connect a capacitor, C_{PW}, in parallel with R_{PW}. With R_{PW} and C_{PW} set as specified in Table II suddenly apply $I_{35} = 30$ amperes (through terminals 3 and 5).

TABLE II

Rpw Test - Max. Restraint Tap

$R_1 = 0.10$, $R_0 = 1.6$, $T = 4$

Insulating Transformer Ratio	Rpw † in ohms		Cpw in microfarads
4 to 1	1200	1900	0.75
6 to 1	2700	4300	0.33

† The relay should not operate at the lower value of Rpw, but should operate at the higher value.

Additional tests for the sequence filter and the operating unit are described under "Calibration Check." These latter tests are not required unless the relay fails to meet the acceptance tests.

Indicating Contactor Switch (ICS)

Close the main relay contacts and pass sufficient direct current through the trip circuit to close the contacts of the ICS. This value of current should not be greater than the particular ICS tap setting being used. The indicator target should drop freely.

CALIBRATION CHECK

The following tests are recommended whenever a check on the relay calibration is desired.

Over-all Relay Check

Over-all calibration can be checked by the procedure described under "Acceptance Tests." If the relay has been calibrated in the minimum restraint tap (factory calibration is made in the maximum restraint tap), the R_{PW} test should be made in accordance with Table III instead of Table II.

TABLE III

Rpw Test - Min. Restraint Tap

$R_1 = 0.10$, $R_0 = 1.6$, $T = 4$

Insulating Transformer Ratio	Rpw † in ohms		Cpw in microfarads
4 to 1	800	1400	0.75
6 to 1	1800	3100	0.33

† The relay should not operate at the lower value of Rpw, but should operate at the higher value.

Sequence Filter: Remove tap screw T and connect a high-resistance voltmeter across this open-circuited point by connecting to the tap plate and to one of the saturating transformer taps at the rear of the tap block. Energize the relay with $I_{79} = 6.94$ amperes (terminals 7 and 9). The measured open-circuit voltage, V_F, should be:

$$V_F = 8R_1 \pm 5\% \text{ volts.}$$

$$\text{(e.g., if } R_1 = 0.1,\ V_F = 8 \times 0.1 = 0.8 \text{ volt.)}$$

Repeat this voltage measurement with $I_{59} = 6.94$ amperes.

Operating Unit: The following test will check the polar unit calibration and the performance of the rectifiers. Connect a variable non-inductive resistor across the high-voltage terminals of the insulating transformer (H1 to H4), and connect d-c milliammeters in series with the operating and restraining coils of the polar unit by opening these circuits. (The restraint can be opened at the tap circuit for max. and min. restraint. The operating circuit has to be opened at the polar unit.) These milliammeters should have low resistance and should be capable of reading in the order of 20 to 25 ma in the operating coil and 100 to 150 ma in the restraining circuit. Using $T = 4$, $R_1 = 0.1$, $R_0 = 1.6$, energize the relay with $I_{35} = 10$ amperes (terminals 3 and 5) and increase the variable

resistance across the insulating transformer high-voltage terminals until the relay just trips. The values obtained should conform substantially to the following equations:

For minimum restraint

$$I_O = 0.12\ I_R + 8$$

For maximum restraint

$$I_O = 0.16\ I_R + 8$$

where I_O and I_R are operating and restraining coil coil currents, respectively, in milliamperes. The results are subject to variations between individual relays, due to different exciting impedances of the insulating transformers. However, the value should never be lower than:

For minimum restraint

$$I_O = 0.12\ I_R + 4$$

For maximum restraint

$$I_O = 0.16 I_R + 4$$

CALIBRATION PROCEDURE

If the factory calibration has been disturbed, the following procedure should be followed to recalibrate the relay.

FILTER CALIBRATION

A. R_1 Taps

1. Disconnect T current tap link and place Ro tap in 1.6
2. Connect voltmeter (low-reading, high resistance rectox) across relay terminal 2 and the common of T tap block.
3. Pass 5 amperes a.c. into terminal 5 and out terminal 9 of the relay.
4. Adjust the corresponding R_1 slide wire position (see Fig. 2 for location) to be within limits of following table for each specified setting of R_1 tap screw.

R_1 Tap Setting	Volts A.C.
.15	0.865 ± .008
.10	0.577 ± .007
.07	0.433 ± .005

B. R_{1A} Taps

1. Disconnect T current tap link and set Ro in O tap.
2. Connect a.c. voltmeter across relay terminal 3 and the common connection of R_{1A} and Ro (see Fig. 2 for location).
3. Pass 5 amperes a.c. into terminals 5 and out terminal 9 of the relay.
4. Adjust the corresponding R_{1A} slide wire position (see fig. 2 for location) to within limits of following table for each specified setting of R_{1A} Tap screw

R_{1A} Tap Setting	Volts A.C.
.15	0.250 ± .005
.10	0.167 ± .003
.07	0.125 = .003

C. Ro Taps

No adjustments can be made on the Ro resistors. Value of resistance can be checked by passing 5 amperes a.c. through terminal 3 and out terminal 9. T tap must be disconnected. Following voltages should be measured across terminal 2 and the specified tap of Ro.

Ro Tap Setting	Volts A.C.
.39	1.85 to 2.05
.51	2.45 to 2.68
.68	3.28 to 3.60
.90	4.33 to 4.70
1.20	5.78 to 6.27
1.60	7.72 to 8.38

Polar Unit Contact Adjustment: Place a 0.088 to 0.095 inch feeler gage between the right hand pole face and the armature. This gap should be measured near the front of the right hand pole face. Bring up the back-stop screw until it just makes with the moving contact. Place a 0.045 to 0.050 feeler gage between the moving contact and the stationary contact on the left-hand side of the polar unit. Bring up the stationary contact until it just makes with the gage and lock in place. For relays with double contacts make sure that both upper and lower contacts make at the same time.

Polar Unit Calibration: Connect the restraint tap link in the position in which it will be used. Connect terminals X1 and X2 of the insulating transformer across the pilot-wire terminals of the relay. Connect the relay taps on T = 4, R_1 = 0.1, R_O = 1.6.

The sensitivity of the polar unit is adjusted by means of two magnetic, screw type shunts at the rear of the element. Looking at the relay front view, turning out the right hand shunt decreases the amount of current required to close to the right hand stop. Conversely, drawing out the left hand shunt decreases the amount required to trip the relay. In general, the farther out the shunt screws are turned, the greater the toggle action will be and as a result, the dropout current will be lower. In adjusting the polar elements, be sure that a definite toggle action is obtained, rather than a gradual movement of the armature.

Start with both shunt out 4 to 5 turns. Short out the pilot wire on the high side of the insulating transformer. Momentarily apply 40 amperes from terminals 5 to 3. Now remove the short from H1 to H4 and, adjust the right hand shunt such that the contacts close with a positive snappy toggle action at I_{79} = 6.9 to 7.0 amperes. After this adjustment is complete, short out pilot wire and apply 40 amperes momentarily from terminals 5 to 3. Now remove the short from H1 to H4 and, check pickup for I_{79}. If value has changed from before, it will be necessary to re-adjust the right hand shunt. Several trials may be necessary before the pickup will be constant. In each case, the 40 amperes should be applied before any additional adjustments are performed on the shunt.

After the shunts have been adjusted, apply 40 amperes momentarily to terminals 3 and 5 of the relay with the pilot wire open. Pickup will be approximately 5 amperes with current applied to terminals 7 and 9. This change in pickup is due to a change in the residual magnetism in the polar unit of the relay. In the de-energized state, the permanent magnet of this unit produces a flux or magnetic bias to keep the contacts open. When the unit is energized, a second flux (electrical) is produced which either adds to or substracts from the magnetic flux. When the electrical flux is removed, the magnetic structure of the polar unit is changed. Hence, the flux produced by an excess of restraint current, adds to the magnetic bias, and the flux produced by an excess of operating current substracts from the magnetic bias. This characteristic is inherent in the polar unit and has no affect on the overall performance of the relay.

After the shunt adjustment has been made, change the input current connections to terminals 3 and 5. Apply 40 amperes with H, and H4 terminals shorted. Remove short and measure pickup with current applied to terminals 3 and 5. The relay should trip with I_{35} = 0.45 to 0.55 amperes.

ROUTINE MAINTENANCE

Contacts: All contacts should be cleaned periodically. A contact burnisher, S#182A836H01, is recommended for this purpose. The use of abrasive material for cleaning is not recommended, because of the danger of embedding small particles in the face of the soft silver and thus impairing the contact.

ICS Unit: Close the main relay contacts and pass sufficient direct current through the trip circuit to close the contacts of the ICS. This value of current should not be greater than the particular ICS tap setting being used. The indicator target should drop freely.

Operating Unit: Check the relay minimum pickup, with the pilot wires disconnected from terminals H1 and H4 of the insulating transformer, by energizing with I_{79} current (terminals 7 and 9). Pick-up current should be:

$$I_{79}\ (\text{min}) = \frac{T}{5.77\ R_1} \pm 5\%\ \text{amperes}$$

Additional tests are recommended with the pilot wire connected as described under "Complete System Test."

COMPLETE SYSTEM TEST

At the time of the initial installation and at subsequent maintenance periods, it is recommended that the following relay system checks be made, with the pilot wire connected.

MINIMUM PICKUP

PRECAUTION: In making this test with the relay in place on the switchboard, it is necessary to connect the load box in the circuit between the relay and the "hot" side of the supply circuit. If this precaution is not observed, it is possible to cause a short circuit between the grounded station service supply circuit and the ground of the current transformer circuit.

The minimum pickup of each relay should be checked before starting the system tests. With taps as specified in Fig. 10, and the pilot wire circuit open on the high side of the insulating transformer, each relay should trip with I_{AN} = 0.45 to 0.55 amp. or with I_{BC} = 6.9 to 7.0 amperes

With the pilot wire connected, energize one relay with I_{AN} and determine the minimum pick-up of all relays. Repeat this test by energizing the other relay or relays. Record these values for future reference. If the neon lamp is lit during these tests, the pilot circuit is presenting too high a shunting effect on the relays.

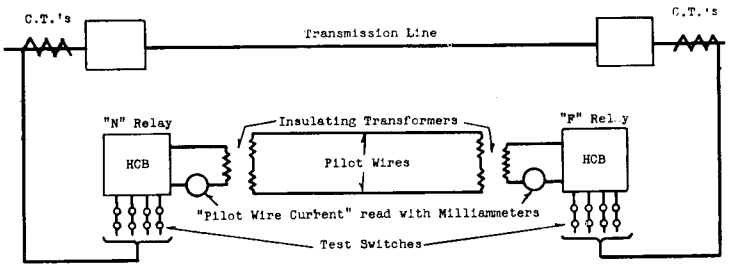

Note: The line should be carrying through load current amounting to at least 1.5 amperes as measured in the secondary of the Current Transformers. This test is based on the ratio of the C.T.'s being the same at each end of the line, in which case set the taps of both relays to $R_1 = .1$; $R_0 = 1.6$; $T = 4$ for this test.

	RELAY "N"					RELAY "F"				
Test No.	Test Switch	Relay Current	Relay Trip	"Pilot Wire Current" Circulating	"Pilot Wire Current" Remote	Test Switch	Relay Current	Relay Trip	"Pilot Wire Current" Circulating	"Pilot Wire Current" Remote
1		A,B,C,N	No	(1)	(1)		A,B,C,N	No	(1)	(1)
2		A,C,B,N	No	(2)	(2)		A,C,B,N	No	(2)	(2)
3		A,N	Yes	(3)	(0)		O	Yes	(3)	(3) (4)
4		O	Yes	(3)	(3) (4)		A,N	Yes	(3)	None
5		A,N	No	(3)	(3)		A,N	No	(3)	(3)
6		A,N	Yes	(6)			B,C,N	Yes	(6)	

REMARKS

Tests 1 and 2 are to check normal positive sequence rotation of phases.
Tests 3 and 4 simulate internal Phase A to Ground fault with single end feed.
Test 5 simulates an external Phase A to Ground fault. (5)
Test 6 simulates an internal Phase A to Ground fault, with equal feed from the two ends, since $I_B + I_C = - I_A$, with balanced load.

LEGEND OF TEST SWITCH SYMBOLS:

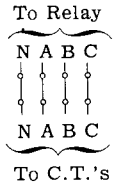

Normal Connection. All Currents to Relay.

EXAMPLE

Phase A current from C. T.'s to Relay. Phase B and C. T.'s shorted to neutral.

(1) The "pilot wire current" will vary depending upon the magnitude of the through load current and the characteristics of the pilot wire. See Figures 11 and 12.
(2) Since the relay is temporarily connected for negative sequence, it should have practically zero output in this test.
(3) These readings may be "off scale" depending upon the magnitude of the load current.
(4) The relay at this station should reset when the "far" current is being read because the local relay will be receiving no current from either the pilot wire or the current transformers.
(5) Test 4 and 5 can be repeated using phase B to neutral current, and again with phase C to neutral current, but this is not strictly necessary on the basis that, having proved the phase sequence with tests 1 and 2, and having proved the correspondence of phase A at the two ends of the line with test 5, then phases B and C must be correct.
(6) Some pilot wire current will be read, depending upon the magnitude of the distributed capacity of the pilot wire in combination with the magnetizing impedance of the insulating transformer.

Fig. 10. HCB Relay System Testing Procedure.

INTERPRETATION OF TESTS

1. Tests #1 and #2, Figure 10, are designed to indicate that the relays have been wired with the correct phase rotation. When the phase rotation is deliberately and temporarily changed by test #2, then the pilot-wire currents should be substantially zero. Any small value of pilot wire current which appears may be due to either a small unbalance in the load current, or else due to harmonic currents flowing through the line. If either relay has inadvertently been connected for the wrong phase rotation, then the fact will be apparent when reading local current. Local current should be interpreted from Figure 13, with the amount of load current which is present. If no current is read on test #1 for the local relay, and if current for test #2 is in line with Figure 13, then it is an indication that that particular relay has been connected for the wrong phase rotation.

a. In the event the pilot wire is open-circuited, the apparent circulating current will be quite low, being limited to the magnetizing current of the insulating transformer. Also, it will not be possible to read current from the remote end.

b. If the pilot wire is short-circuited, then the circulating current will be near normal, but it will not be possible to read current from the remote end.

2. If the pilot wire is reversed, (a) the circulating current will be low on test #1, but it will be possible to read pilot-wire current from the remote relay. (b) Both relays will trip on test #5. If the monitoring relays also suffer from this error in connection, then the error should be corrected at one relay location by reversing the connections to the H_1-H_4 terminals of the insulating transformer. However, if the monitoring relays do not suffer from this error, then the polarity of the pilot wires insofar as the HCB relay installation is concerned may be suitably corrected by making a reversal of connections either at the X_1-X_2 terminals of one insulating transformer, or at the output terminals of the relay, #18 and #19, Figure 3.

3. If the phases are rolled at one end of the line, then this will be picked up by test #5. On test #5, neither relay should trip when phase-A-to-neutral current is delivered to each of the two relays with the switching arrangement as shown and discussed. However, if one or both relays trip, then try checking the near relay, phase-A-to-neutral current, against phase-B-to-neutral current at the far relay. Also, check phase-A-to-neutral current at the near relay against phase-C-to-neutral current at the far relay. If, for example, neither relay trips when phase-A-to-neutral current is used for the near relay and phase-B-to-neutral current is used at the far relay, then it is an indication that what had been thought to be phase B current at the far location really identifies with phase A current at the near location. This identifies a rolled-phase condition, and also indicates the correction which must be made in the connections of the current transformer input to the relay.

4. One combination of errors which is somewhat tricky to pick up is the combination of pilot wires reversed plus a rolled-phase condition at one end. Let it be assumed that the pilot wire is reversed at the far end, making an error of 180 degrees. Then let it be assumed that the phases are also rolled by 120 degrees, thereby adding another error of 120 degrees. Adding these two together brings the total up to 300 degrees, which is within 60 degrees of what would be normal. Because of this, the only symptom which will appear in the first four tests is that the circulating current is likely to be lower than one would expect when read at one end or the other on test #1. However, test #5 may be used to identify this combination of errors. When the condition exists as described, when test #5 is extended to check phase A current at the near end against each of the three currents at the far end in turn, it will be found that at least one of the two relays will always trip. If this condition is found, reverse the pilot-wire connection, check out the rolled-phase condition and correct it, and then proceed with all six tests.

5. Test #6 is a final verification test.

Fig. 10 (continued)

LOADED CIRCUIT TEST

In performing these tests, the following procedure should be used.

1. Standard testing equipment is recommended for permanent installation with the relays as shown in Fig. 9. If this equipment is not available, a similar portable test should be set up using a low-resistance-a-c milliammeter.
2. Red-handle flexitest case switch should be open to interrupt the breaker trip circuit.
3. A test crew is necessary at each substation with a means of communication between them.
4. When the test calls for delivering only specified currents to the relay, it is necessary to use a thin piece of insulating material in the ammeter test jack. For example, test #5 of Fig. 10 relay "N". To apply phase A to N current to the near relay only, the switches associated with terminals 6, 7, 8, 9 of figure 3 must be open. Opening switches 6 and 8 short circuits the current transformers for phases B and C. **However, it is also necessary to insert the insulating material in the ammeter test jacks associated with terminals 7 and 9 in order to break up the connection between the filter in the relay chassis and the grounded input circuits from current transformers in phases B and C.**
5. To facilitate making test #2 of Fig. 10, two ammeter test plugs wired together with a foot or two of flexible wire should be used. With these two test plugs suitably wired together, one of them may be shoved in the ammeter test jack associated with terminal 7, Figure 3, and the other shoved in the ammeter test jack associated with terminal 9, Figure 3. (This should not be done until the switches for terminals 6 and 8 have been open, thus short circuiting the current transformers involved). It is desirable to wire the test plugs together such that when one is shoved in the one ammeter test jack with the red side up, and the other is shoved in the other ammeter test jack with the black side up, it is then known that the B and C phase currents to the relay have been reversed at the input to the chassis in line with test #2, Fig. 10. After these test plugs are properly inserted, it is then appropriate to close the switches associated with terminals 6 and 8, Fig. 3, in order to remove the short circuit from the current transformer secondaries.

Perform the tests as indicated in Figure 10 recording the milliammeter readings and the relay input current at the same instant, for future reference. The headings "Circulating" and "Remote" in the table of Figure 10 refer to the test switch positions, "CIRC" and "REM." For tests 3 to 6 of Figure 10, the input current should be increased to about 1.5 amperes by an auxiliary current transformer, if the secondary load current is below this value. Also record the input and output readings with the test switch in the "Local" position. Typical values for the "Local" position readings are shown in Figure 13.

THREE TERMINAL LINES

A similar procedure to Figure 10 should be followed for three-terminal line applications. In this case open the line circuit breaker at one terminal, and disconnect the loads from the pilot wire terminals of the HCB relay at that terminal. This leaves the remaining portion of the line operating as a two terminal line. Now perform the normal tests as outlined for the two terminal line system test. When these tests have been satisfactorily completed, return the third terminal relay to normal and close the breaker at that station. Repeat the above procedure with a different breaker open and relay disconnected. This will complete the check of the three terminal line.

ENERGY REQUIREMENTS

The volt-ampere burden of the type HCB relay is practically independent of the pilot-wire resistance and of the current tap used. The following burdens were measured at a balanced three-phase current of 5 amperes:

For tap 4, $R_1 = 0.075$ and $R_0 = 0.39$

Phase A	1.25 volt-amperes	0°
Phase B	0.30 volt-amperes	285°
Phase C	0.90 volt-amperes	45°

For tap 4, $R_1 = 0.15$ and $R_0 = 1.6$

Phase A	2.3 volt-amperes	120°
Phase B	4.6 volt-amperes	285°
Phase C	5.3 volt-amperes	45°

The angles above are the degrees by which the current lags its respective voltage.

The continuous rating of the relay is 10 amperes.

The two-second overload ratings of the relay are 150 amperes phase and 125 amperes ground currents.

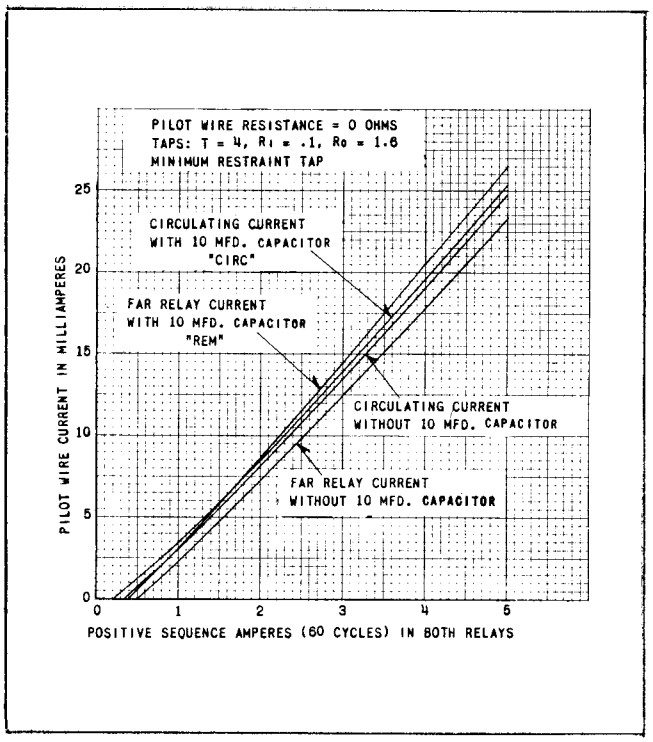

Fig. 11. Typical Test Output vs. Input Relay Current in a Two-Terminal Line with Zero Pilot-Wire Resistance.

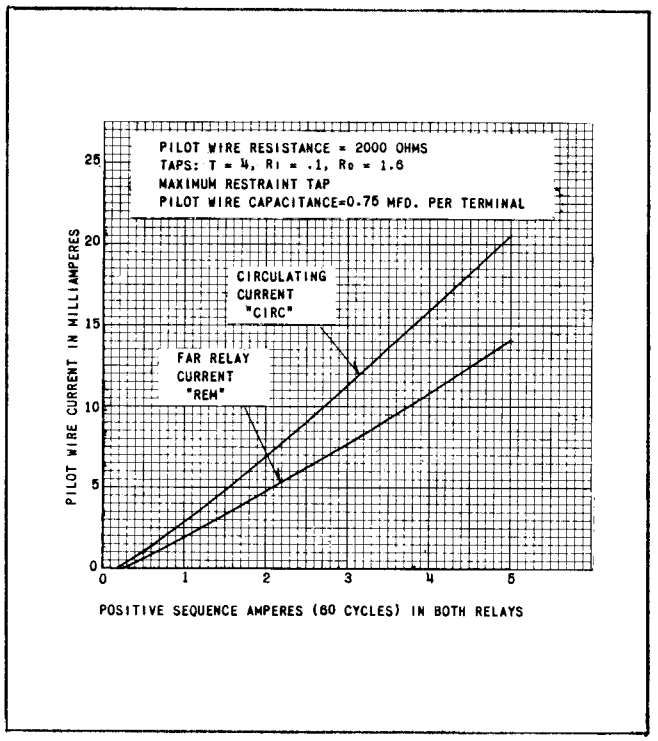

Fig. 12. Typical Test Output vs. Relay Current in a Two-Terminal Line with 2000-Ohm Pilot-Wire Resistance With or Without 10-mfd Capacitor.

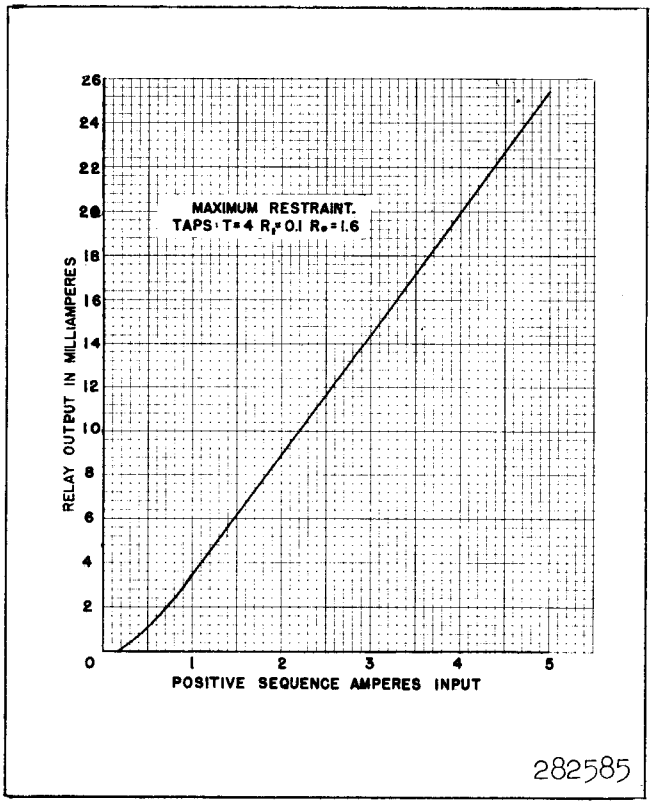

Fig. 13. Typical Curve of Relay Output vs. Positive-Sequence Input – Test Switch in Local Position.

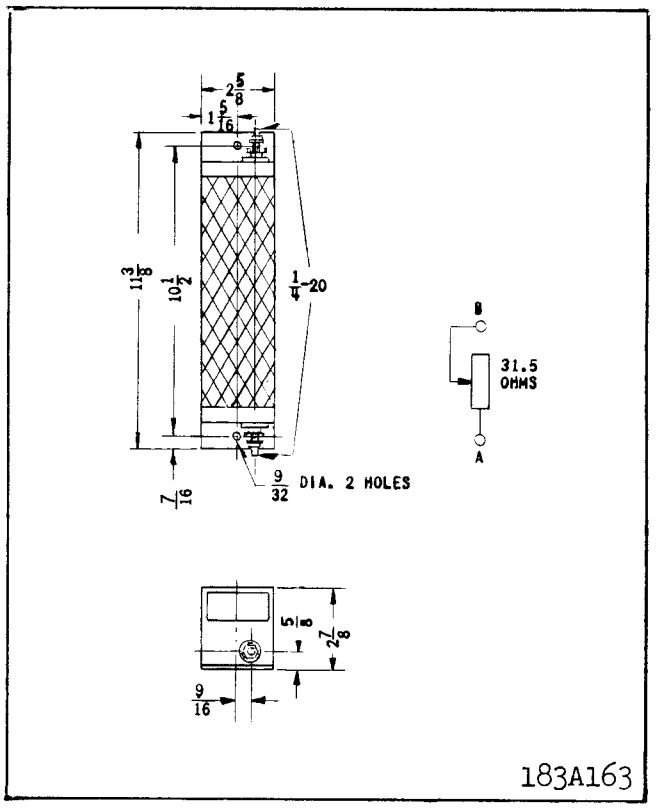

Fig. 14. Outline and Drilling Plan of S#1209991 Balancing Resistor for Three-Terminal Line Applications.

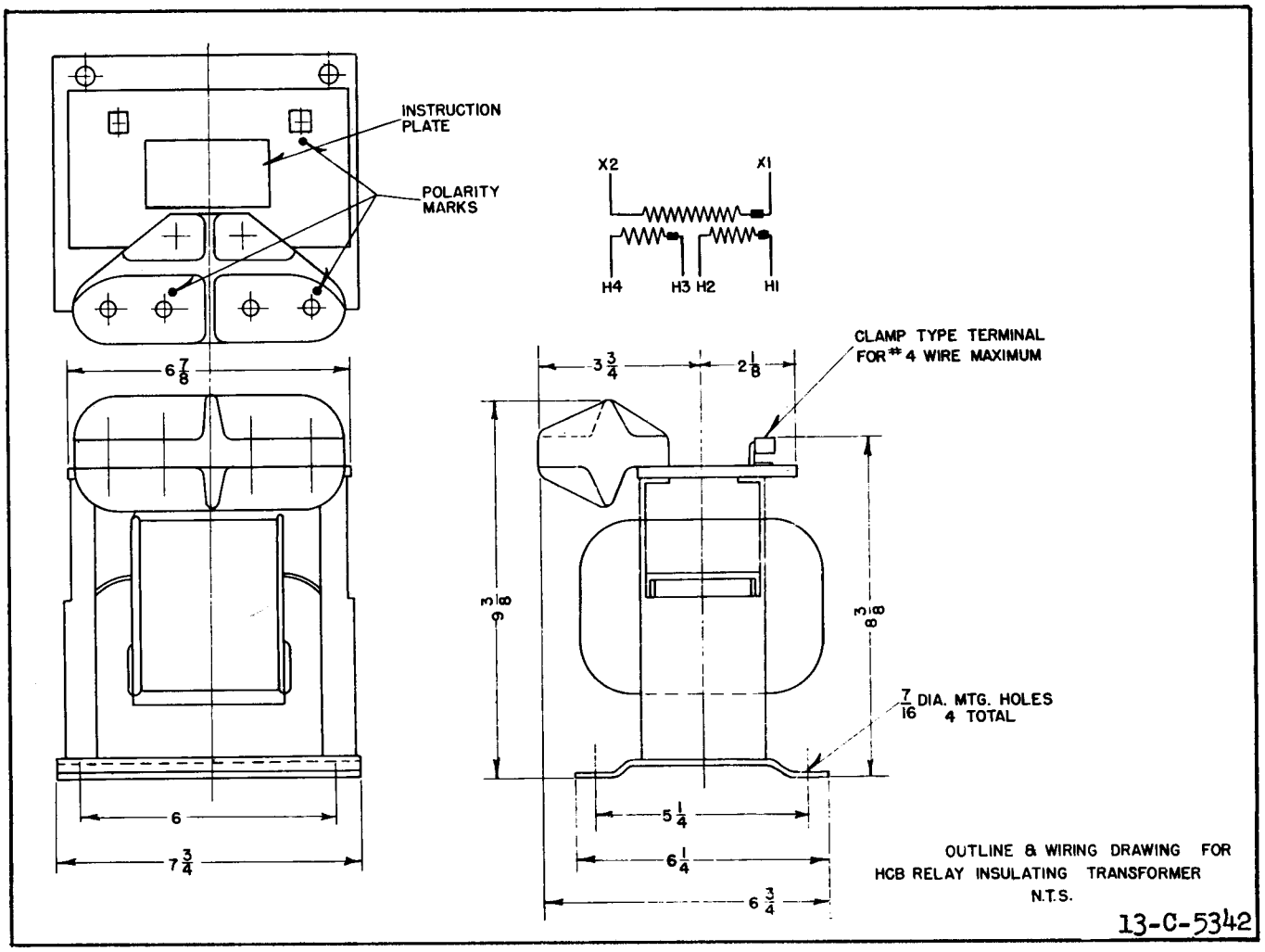

Fig. 15. Outline and Drilling Plan of HCB Relay Insulating Transformer.

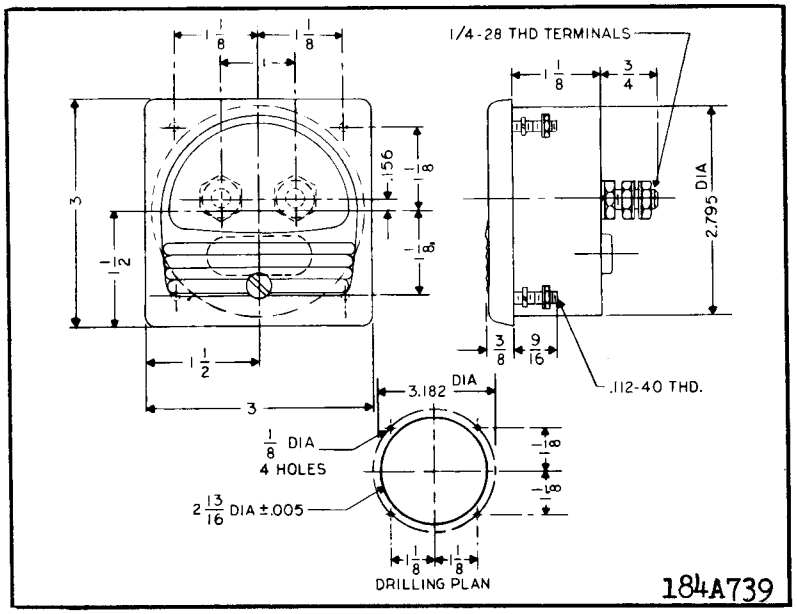

Fig. 16. Outline and Drilling Plan of the Semi-Flush-Type Test Milliammeter.

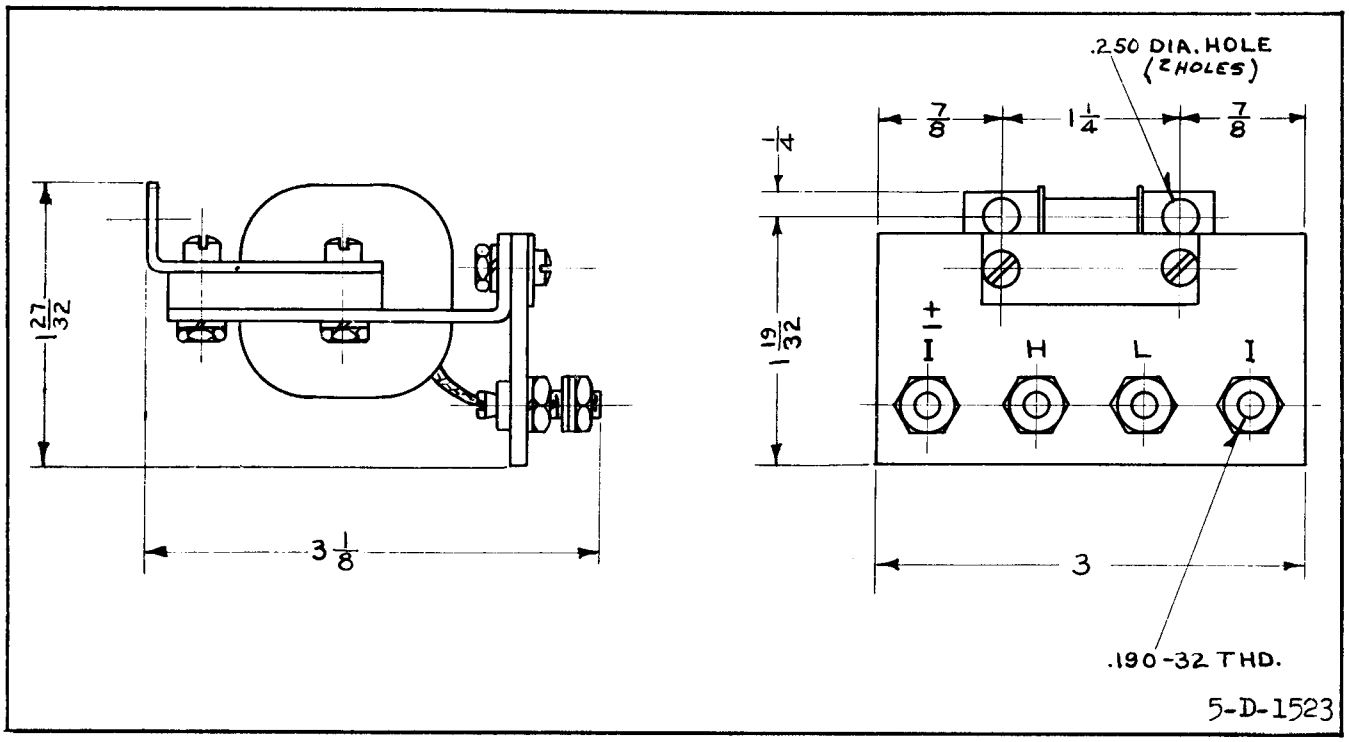

Fig. 17. Outline of the Test Milliammeter Auxiliary Transformer.

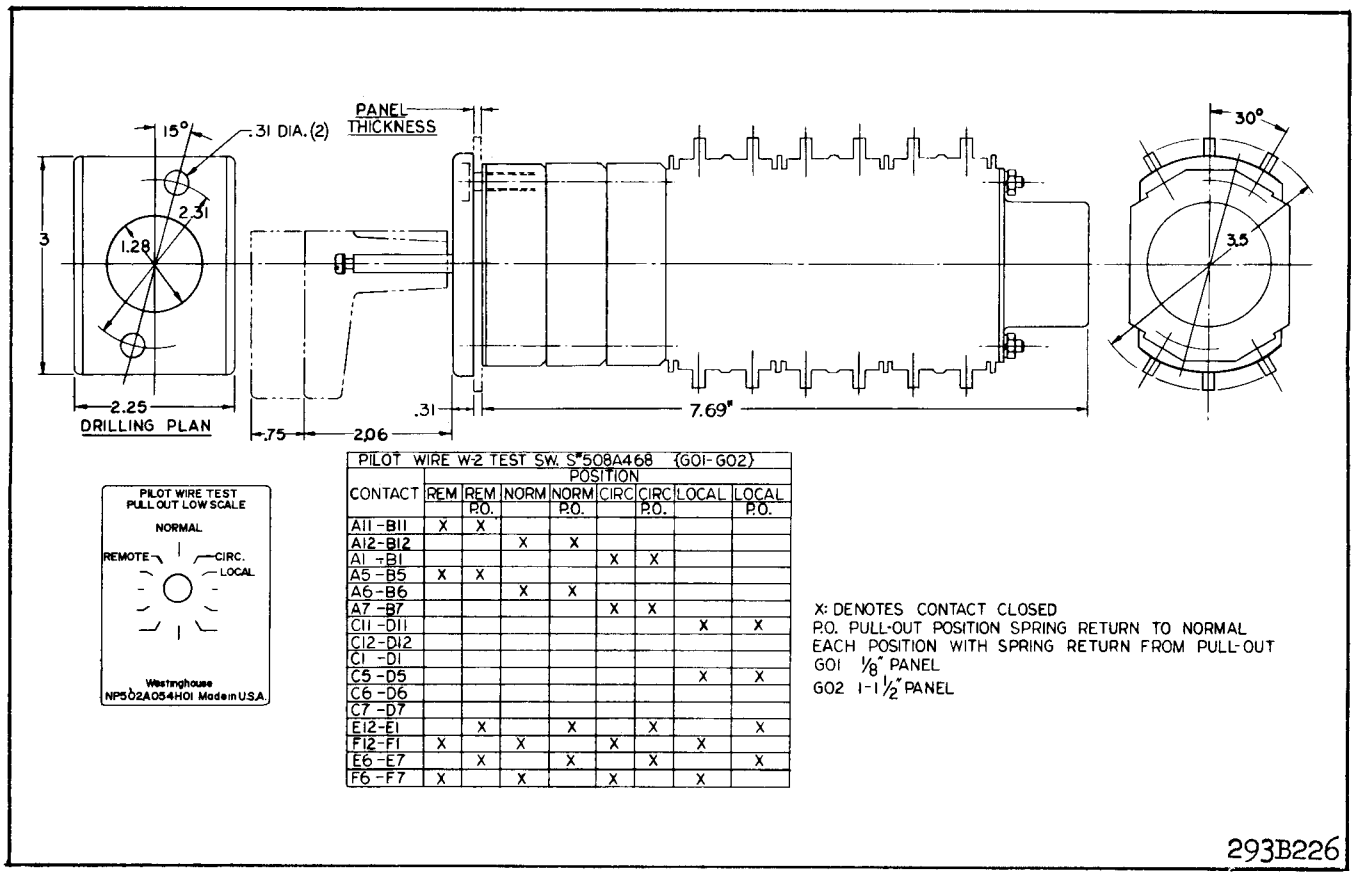

PILOT WIRE W-2 TEST SW. S#508A468 (G01-G02)

CONTACT	POSITION							
	REM	REM P.O.	NORM	NORM P.O.	CIRC	CIRC P.O.	LOCAL	LOCAL P.O.
A11-B11	X	X						
A12-B12			X	X				
A1-B1					X	X		
A5-B5	X	X						
A6-B6			X	X				
A7-B7					X	X		
C11-D11							X	X
C12-D12								
C1-D1								
C5-D5							X	X
C6-D6								
C7-D7								
E12-E1		X		X		X		X
F12-F1	X		X		X		X	
E6-E7		X		X		X		X
F6-F7	X		X		X		X	

Fig. 18. Outline and Drilling Plan of the Type W-2 Test Switch.

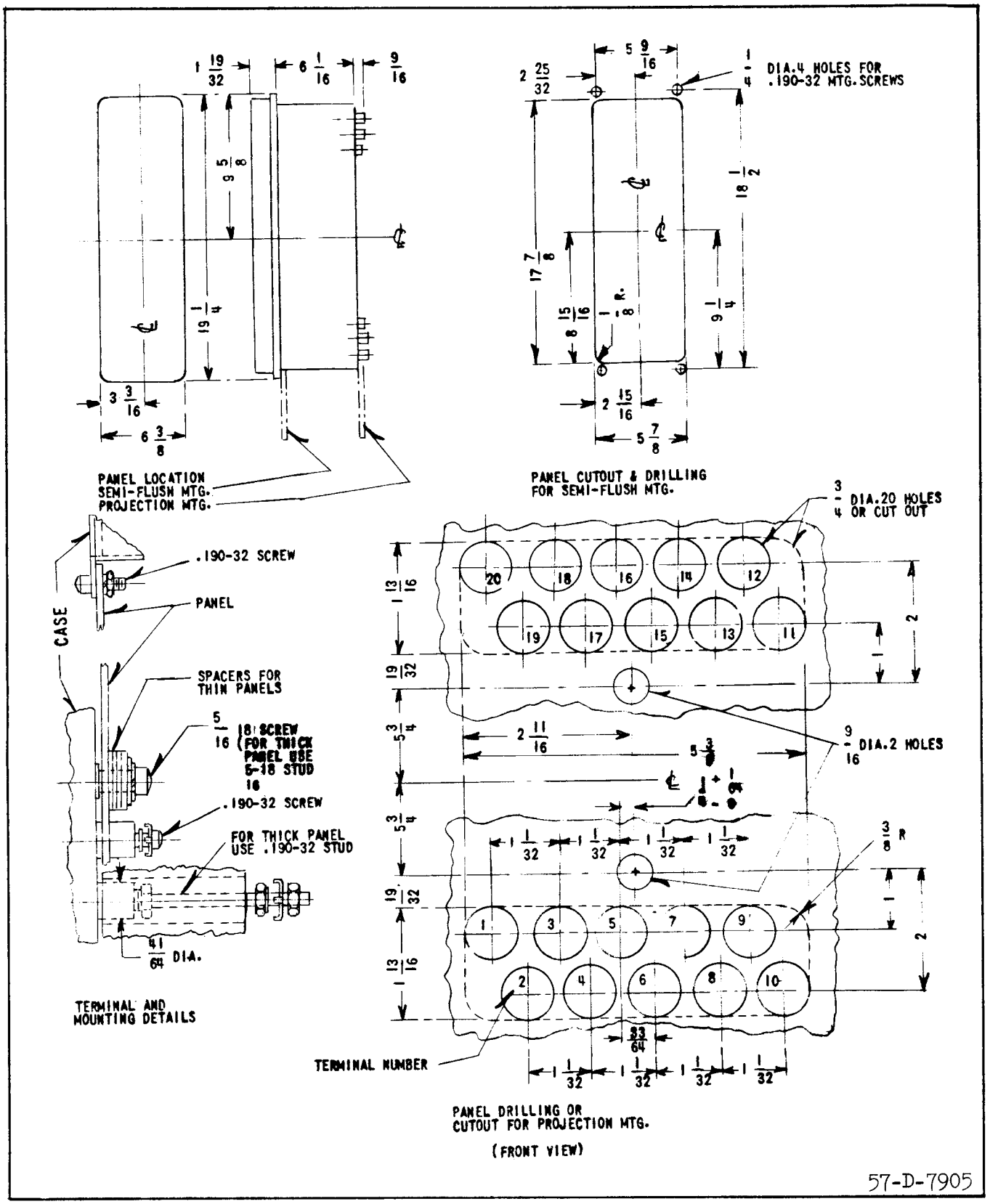

Fig. 19. Outline and Drilling Plan for the Type HCB Relay in the Type FT-42 Case.

PILOT-WIRE ENERGY

The current and voltage impressed on the pilot wire do not exceed 100 milliamperes and 60 volts. The wave form and magnitude of the pilot-wire current are such that telephone interference is within the limits allowed by the Bell Telephone Company. This permits the use of leased telephone lines as a pilot-wire channel.

RENEWAL PARTS

Repair work can be done most satisfactorily at the factory. However, interchangeable parts can be furnished to users who are equipped for doing repair work. When ordering parts, always give the complete nameplate data.

APPROXIMATE RESISTANCE VALUES OF COMPONENTS IN HCB RELAY

Transformer	Secondary Winding		Start to Tap 20 to 30 ohms
			Start to Finish 110 to 140 ohms
Polar Unit	Operating Coil		290 - 320 ohms
Polar Unit	Restraining Coil	Maximum	12 - 16 ohms
		Minimum	9 - 12 ohms
Resistor	Rc		41 - 44 ohms
Tube Resistor	Ro		As Marked on Ro Tap Plate
Looped Resistor	R1		As Marked on R1 Tap Plate
	R1A		As Marked on R1A Tap Plate
Rectifiers			IN91 Germanium Diodes
Indicating Contactor Switch			0.2 amp. Tap 6.5 ohms
			2.0 amp. Tap 0.15 ohms

WESTINGHOUSE ELECTRIC CORPORATION

RELAY-INSTRUMENT DIVISION **NEWARK, N. J.**

Printed in U.S.A.

INSTALLATION • OPERATION • MAINTENANCE

INSTRUCTIONS

TYPE HCB PILOT WIRE RELAY SYSTEM

CAUTION Before putting protective relays into service, remove all blocking which may have been inserted for the purpose of securing the parts during shipment, make sure that all moving parts operate freely, inspect the contacts to see that they are clean and close properly, and operate the relay to check the settings and electrical connections.

APPLICATION

The type HCB relay is a high speed pilot wire relay designed for the complete phase and ground protection of two and three terminal transmission lines. Simultaneous tripping of the relay at each terminal is obtained in about 20 milliseconds for all faults. A complete installation for a two terminal line consists of two relays, two insulating transformers, and an interconnecting pilot wire circuit. For a three terminal line, three relays, three insulating transformers, and a wye-connected pilot wire circuit with branches of equal series resistance are required.

CONSTRUCTION

The relay consists of a combination positive and zero phase sequence filter, a saturating auxiliary transformer, two full wave rectifier units, a polar type relay unit, a neon lamp, and an indicating contactor switch (ICS), all mounted in a single case. The external equipment normally supplied with the relay consists of an insulating transformer, a milliammeter and test switch.

SEQUENCE FILTER

The sequence filter consists of a three-legged iron core reactor and a set of resistors designated R1 and Ro. The reactor has three windings; two primary and a tapped secondary winding, wound on the center leg of a "F" type of lamination. The secondary taps are wired to the circularly arranged R1 tap connections in the front of the relay. The R1 tap links also connect to the R_1 resistor (looped resistance wire). Ro consists of three tube resistors with taps wired to the circularly arranged Ro tap connections in the front of the relay. R_{1A} taps are on the R_1 resistance wire and are wired to the circularly arranged R_{1A} tap connections in the front of the relay.

SATURATING TRANSFORMER

The output of the sequence filter connects to the primary of a two-winding saturating transformer. The primary winding is tapped and wired to a tap block T in the front of the relay. The secondary winding is connected to the neon lamp and from a fixed tap to the relay coil circuits.

POLAR RELAY UNIT

This unit consists of a rectangular-shaped magnetic frame, an electromagnet, a permanent magnet, and an armature with either one or two contacts. The poles of the cresent-shaped permanent magnet bridge the magnetic frame. The magnetic frame consists of three pieces joined in the rear with two brass rods and silver solder. These non-magnetic joints represent air gaps which are bridged by two adjustable magnetic shunts. The operating and restraint windings are concentrically wound around a magnetic core. The armature is fastened to this core at one end and floats in the front air gap at the other end. The moving contact is connected to the free end of a leaf spring.

RESTRAINT TAPS

A set of restraint taps are located on the front of the relay near the polar unit. These taps are the maximum and minimum restraint taps of the relay.

INDICATING CONTACTOR SWITCH UNIT (ICS)

The d-c indicating contactor switch is a small clapper-type device. A magnetic armature, to which leaf-spring mounted contacts are attached, is attracted to the magnetic core upon energization of the switch. When the switch closes, the moving contacts bridge two stationary contacts, bypassing the main relay contacts. Also during this operation, two fin-

SUPERSEDES I.L. 41-971.2A
*Denotes change from superseded issue.

EFFECTIVE MARCH 1966

gers on the armature deflect a spring located on the front of the switch, which allows the operation indicator target to drop. The target is reset from the outside of the case by a push rod located at the bottom of the cover.

The front spring, in addition to holding the target, provides restraint for the armature, and thus controls the pick-up value of the switch.

OPERATION

The connection of the HCB system of relays to the protected transmission line is shown in Fig. 8. In such a connection, the relays operate for faults within the line terminals but not for faults external to the protected transmission line. This is accomplished by comparing the relative polarities of voltages at opposite ends of the transmission line by means of a metallic pilot wire.

As shown in Figure 8, the composite sequence filter of each HCB relay receives three phase current from the current transformers of the transmission line. The composite sequence filter of the HCB converts the three-phase current input into a single-phase voltage output, V_F, of a magnitude which is an adjustable function of the phase A positive and zero sequence current. This voltage, V_F, is impressed on the primary wiring of the saturating transformer. The saturating transformer output voltage, V_S, is applied to the relay coils and to the pilot wire through an insulating transformer. The saturating transformer and a neon lamp across its secondary winding serve to limit the energy input to the pilot wire.

During an external fault, assuming matched relays, the magnitude of V_S at both stations will be the same. The relative polarities of the V_S voltages will be as shown in Figure 4. Since the voltages add, most of the current will circulate through the restraint coils and the pilot wire, with a minimum of operating coil current. The relative effects of the operating and restraint coil currents are such that the relay is restrained.

During an internal fault, the relative V_S polarities reverse. Since the V_S voltages now oppose each other, most of the current flowing in the restraint coils is also forced through the operating coils with a minimum of current in the pilot wire. This increase in operating current overcomes the restraining effect and both the relays operate.

Within limits, as defined in Figure 7 and under "Characteristics," all the relays will operate for an internal fault regardless of the fault current distribution at the various stations. The nominal pickup (total internal fault current) of the relaying system is equal to the minimum trip of a single relay multiplied by the number of relays. For example, if the pickup of each relay, with the pilot wire open, is 6 amperes, a two terminal line system has a nominal pickup of 2 x 6 = 12 amperes.

PILOT WIRE EFFECTS

In Figure 4 it can be seen that a short-circuited pilot wire will short circuit the relay operating coils. Depending on the location of the short, at least one of the relays will fail to trip during an internal fault. If the pilot wire is open circuited, almost all the restraint coil current will flow through the operating coil and the relay operates as an over-current device.

Excessive pilot wire series impedance will approach an open-circuited condition and the relays will operate during external faults. Excessive pilot wire shunt capacitance will approach a short-circuited condition and the relays will not operate.

OPERATING UNIT THEORY

The polar unit flux paths are shown in Figure 5. With balanced air gaps, the permanent magnet produces flux flowing in two paths, one through the front gaps and one through the rear gaps. This flux produces north and south poles, as shown. By turning the left shunt in, some of the flux is forced through the armature, making it a north pole. Thus, reducing the left-hand rear gap will produce a force tending to pull the armature to the right. Similarly, reducing the right-hand gap will produce a force tending to pull the armature to the left.

CHARACTERISTICS

The voltage, V_F, impressed by the filter upon the saturating transformer is:

$$V_F = 2I_{A1} R_1 + I_{A0} (R_1 + 3R_0) \text{ volts} \qquad (1)$$

where R_1 and R_0 are the positive and zero sequence tap values, respectively;

I_{A1} and I_{A0} are the positive and zero sequence phase A current inputs, respectively, in amperes. *These are vector quantities.*

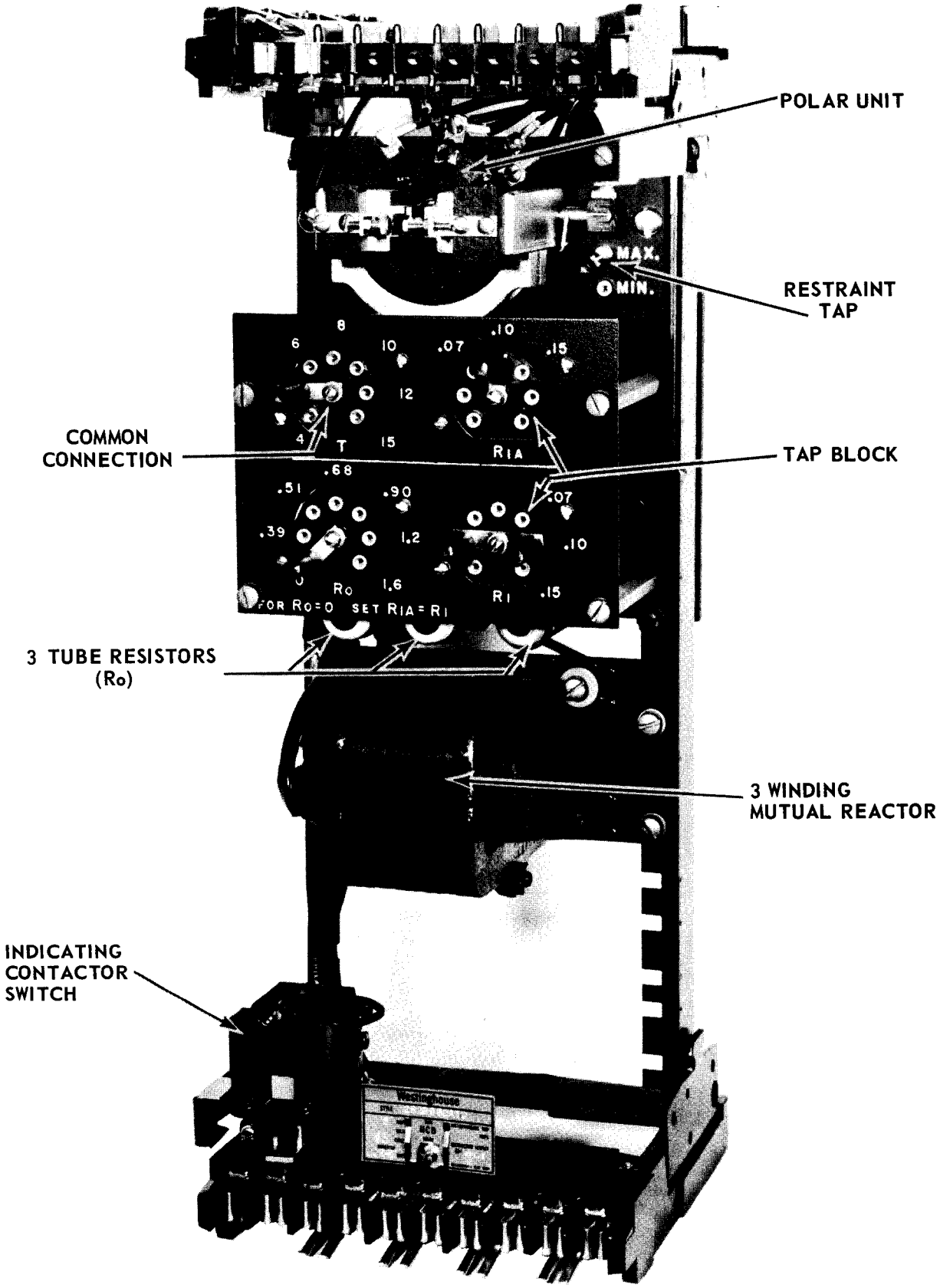

Fig. 1. Type HCB Relay Without Case (Front View).

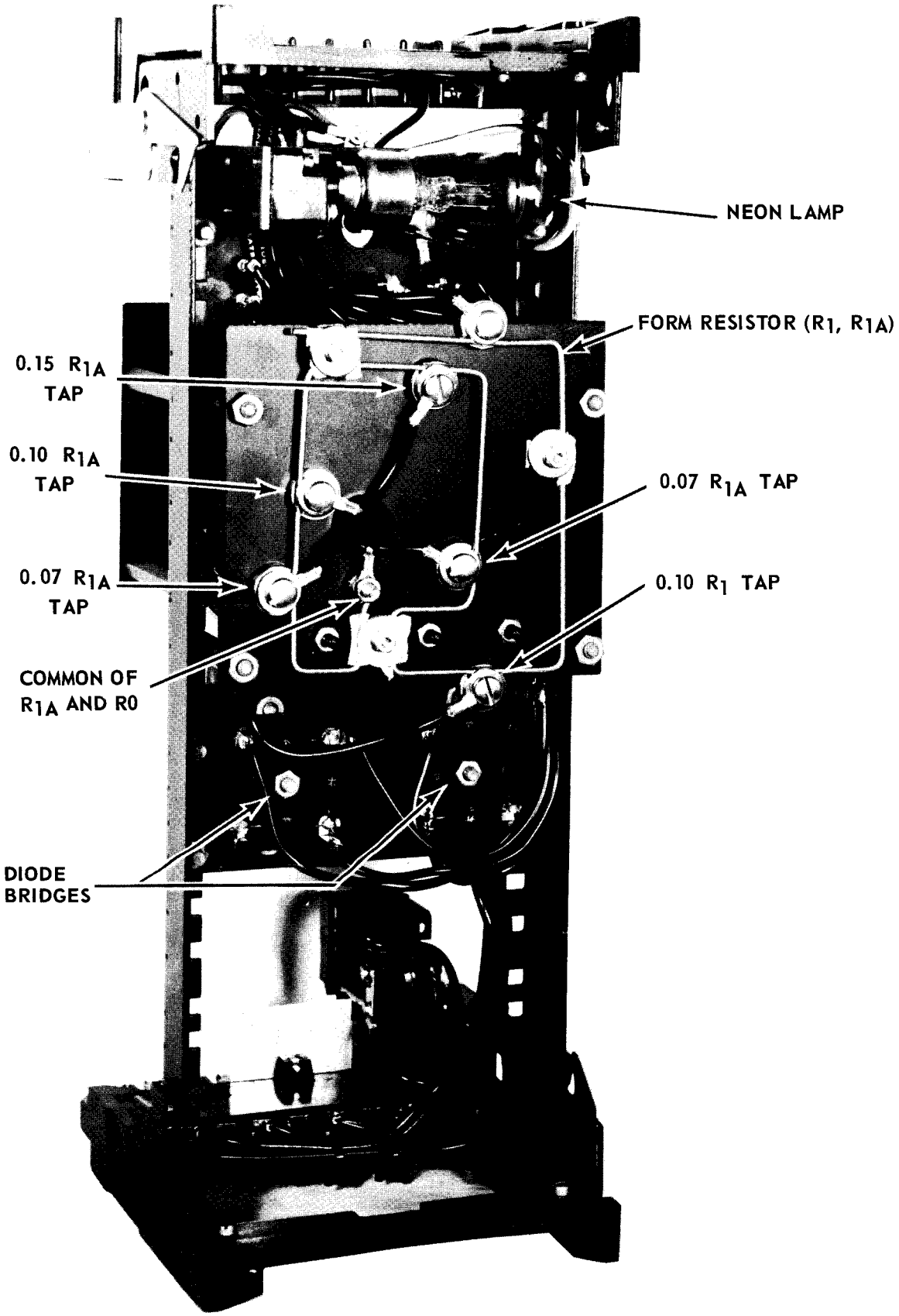

Fig. 2 Type HCB Relay Without Case (Rear View).

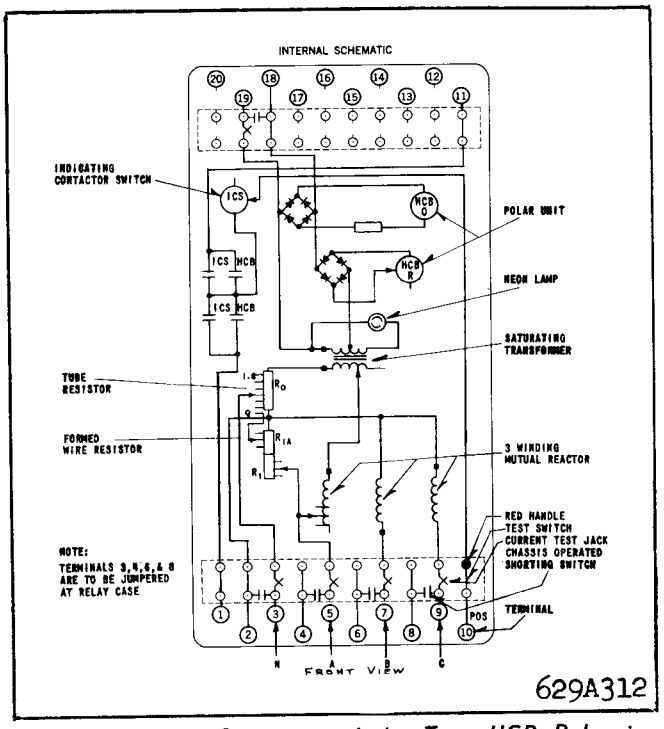

Fig. 3. Internal Schematic of the Type HCB Relay in FT-42 Case (Double Trip Circuit). For the Single Trip Relay the Circuits Associated with Terminal 11 are omitted.

SINGLE RELAY PICKUP (PILOT WIRE OPEN) I_S

Single relay pickup, I_S, is defined as the phase current required to operate one relay with the pilot wire side of the insulating transformer open circuited (H1-H4). The single relay pickup point in terms of filter voltage is:

$$V_F = 0.2T \tag{2}$$

where T is the saturating transformer tap value. Single relay pickup is defined by equating (1) & (2):

$$0.2T = 2\,I_{A1}\,R_1 + I_{A0}\,(R_1 + 3R_0) \tag{3}$$

Current I_S varies with the type of fault. For example, for a 3 phase fault, $I_S = I_{A1}$, since only positive sequence current is present. Substituting $I_S = I_{A1}$ in Eq. (3) & rearranging, the 3 phase fault pickup is:

$$I_S = I_{A1} = \frac{0.2T}{2\,R_1} = \frac{T}{10R_1} \text{ (3 phase fault)} \tag{4}$$

If $R_1 = 0.1$, $R_0 = 1.6$ & $T = 4$:

$$I_S = \frac{T}{10R_1} = \frac{4}{10X0.1} = 4 \text{ amp. (3 phase fault)}$$

For a phase A to ground fault, if $I_{A1} = I_{A2} = I_{A0}$ (I_{A2} is the phase A negative sequence current):

$$0.2T = 2I_{A1}\,R_1 + I_{A1}\,(R_1 + 3R_0)$$

$$I_{A1} = \frac{0.2T}{3(R_1 + R_0)} = I_{A0}$$

But: $I_S = I_{A1} + I_{A2} + I_{A0}$

$= 3I_{A1}$

$$\text{So: } I_S = 3I_{A1} = \frac{0.2T}{R_1 + R_0} \text{ (A-G fault)} \tag{5}$$

If $R_1 = 0.1$, $R_0 = 1.6$ & $T = 4$:

$$I_S = \frac{0.2T}{R_1 + R_0} = \frac{0.2x4}{0.1 + 1.6}$$

$$= \frac{0.8}{1.7} = 0.471 \text{ amp. (A-G fault)}$$

NOMINAL PICKUP (ALL RELAYS)

The nominal pickup, I_{nom}, is defined as

$$I_{nom} = KI_S \tag{6}$$

where I_{nom} = total internal fault current
K = number of relays (2 or 3)
I_S = single-relay pickup with pilot wire disconnected (see above)

For example, for a phase-A-to-ground fault, $I_{A1} = I_{A0}$ with the pilot wire open circuited, the single-relay pickup was previously determined as $I_{AG} = 0.471$ ampere. For a two-terminal line, the nominal pickup for a phase-A-to-ground fault ($R_1 = 0.1$; $R_0 = 1.6$; $T = 4$) is:

$$I_{nom} \text{ (A to G)} = 0.471K = 0.471 \times 2 = 0.942 \text{ ampere.}$$

MINIMUM TRIP (ALL RELAYS)

With equal inputs to all relays and zero pilot-wire shunt capacitance, the relays will operate at their nominal pick-up point. The minimum trip points will vary somewhat from nominal value, depending on the pilot-wire constants and the magnitude and phase angle of the various relay input currents. For example, Figure 6 shows the relay operating points for a two-terminal line, assuming input current to the near relay, only.

An example of the characteristics with various current distributions is shown in Figure 7. The filter

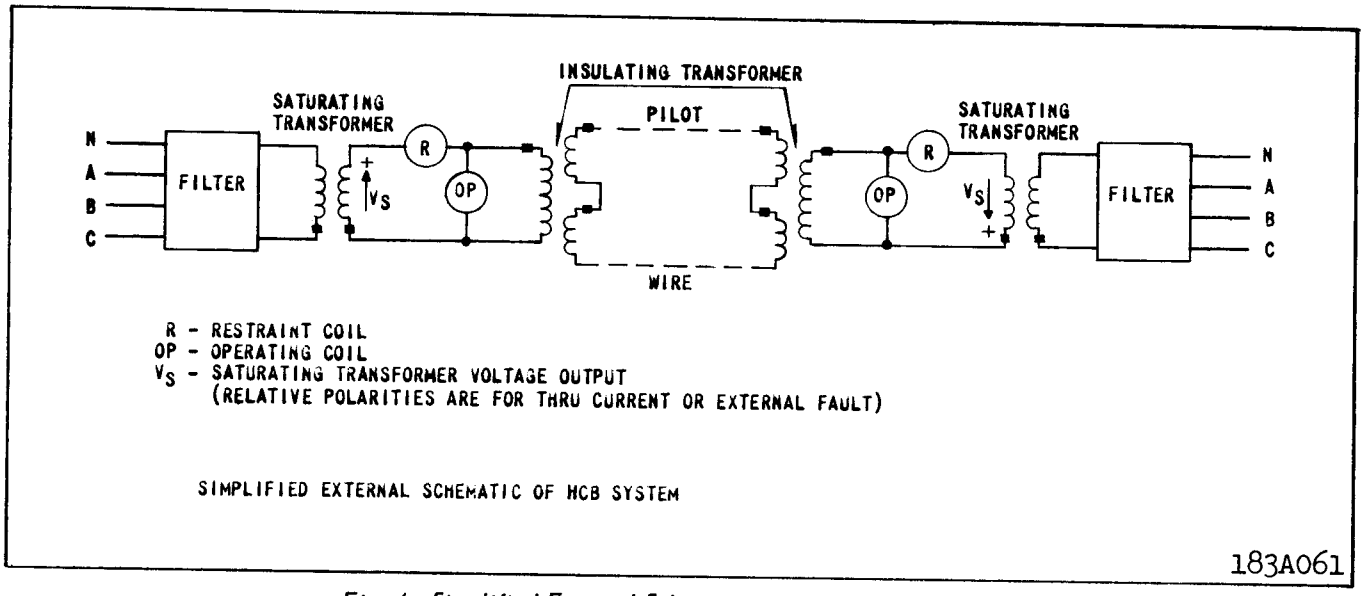

Fig. 4. Simplified External Schematic of the HCB Relay System.

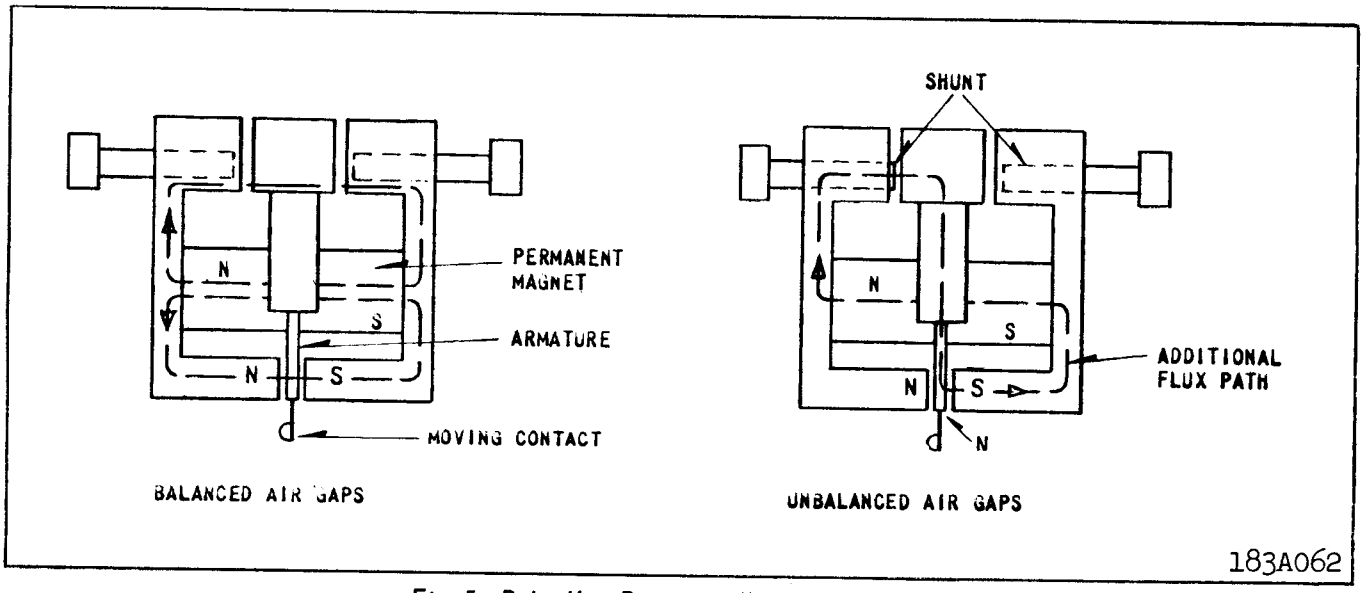

Fig. 5. Polar Unit Permanent Magnet Flux Paths.

output voltage, V_F, of each relay, as defined by equation (1) must be in phase or 180 degrees out of phase, in order for Figure 7 to apply.

INSULATING TRANSFORMER

Unless otherwise noted, all characteristics presented include an insulating transformer with each relay. Two ratios are available: 4/1 and 6/1. The high voltage side is connected to the pilot-wires.

PILOT-WIRE REQUIREMENTS

The relays should not be applied with pilot-wire series resistance or shunt capacitance exceeding the following values:

TABLE I

No. of Relays	Insulating Transformer Ratio			
	4/1		6/1	
	R_L	C_S	R_L	C_S
2	2000	1.5	—	—
3	500/LEG	1.8	1000/LEG	0.75

R_L = series loop resistance in ohms.

C_S = total shunt capacitance in microfarads.

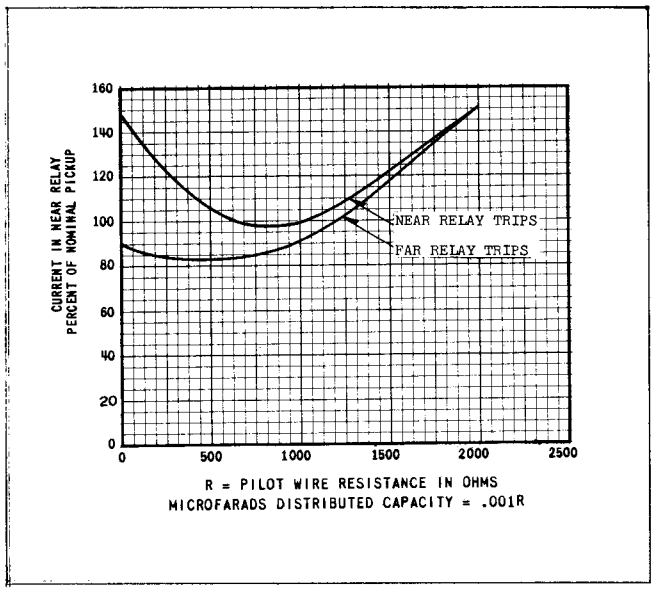

Fig. 6 Typical Curves Showing the Effect of the Pilot Wire on Minimum Trip Current, Two-Terminal Line (Maximum Restraint Tap). Insulating Transformer 4/1 ratio.

Where the shunt capacitance exceeds the above amount, it may be feasible in some cases to provide shunt reactors to compensate for the excessive capacitance. The amount of capacitance which can be compensated is limited and varies depending upon the magnitude of the pilot-wire distributed effect.

A shielded, twisted pilot wire pair, preferably of #19 AWG or larger, is recommended; however, open wires may be used if they are frequently transposed in areas of exposure to power circuit induction. The voltage impressed across either insulating transformer (H-1 to H-4) as a result of induction or a rise in station ground potential, should be less than 7.5 volts to prevent undesired relay operation.

For three-terminal applications, the loop resistance of all legs of the pilot wire must be balanced within 5 percent, with variable resistors as shown in Figure 8. The pilot wire resistance to be balanced is divided by 16 and 36 for the 4 to 1 and 6 to 1 ratio insulating transformers respectively, since the balancing resistors are located on the relay side of the insulating transformers.

Induced voltages and rises in station-ground potential may be handled by the following means:

a) Neutralizing reactors may be connected in series with the pilot wire to hold the pilot wire potential close to the remote ground potential in the presence of a rise in station-ground potential. They do not limit pilot-wire voltages to safe values in the presence of a longitudinal induced voltage. When using the neutralizing reactor, the pilot-wire sheath should be insulated from station ground to minimize
* sheath-to-pair potential in the presence of a rise in station-ground potential. All other pairs in the cable which are connected to station ground should also be protected with neutralizing reactors to minimize pair-to-pair voltages.

b) Drainage reactors may be connected across the pilot wire and to ground through a KX642 protector tube. The drainage reactor is particularly effective in limiting pair-to-ground voltage in the presence of an induced voltage. When the tube flashes, both wires are connected to ground through the drainage reactor windings which offer a low impedance to ground but maintain a high impedance to an a-c voltage across the wires. Thus, the HCB system will operate normally even though the protector tube has flashed over. The drainage reactor is not intended to handle a rise in ground potential.

c) The neutralizing and drainage reactors may be utilized together. If the neutralizing reactor is to be of any value, the drainage reactor through the KX642 protector tube must be connected to remote ground.

TRIP CIRCUIT

The main contacts will safely close 30 amperes at 250 volts d.c., and the seal-in contacts of the indicating contactor switch will safely carry this current long enough to trip a circuit breaker.

The indicating contactor switch has two taps that provide a pick-up setting of 0.2 or 2 amperes. To change taps requires connecting the lead located in front of the tap block to the desired setting by means of a screw connection.

SETTINGS

There are four settings in the relay. The correct tap setting should be determined as outlined under "Setting Calculations".

1) Restraint taps-maximum or minimum
   To change taps, connect the lead in front of the relay to the correct tap.

2) T tap- 4, 5, 6, 8, 10, 12, and 15
   To change taps, loosen center screw and move tap link to desired setting. Tap screw and center screw to be tight after tap change is made.

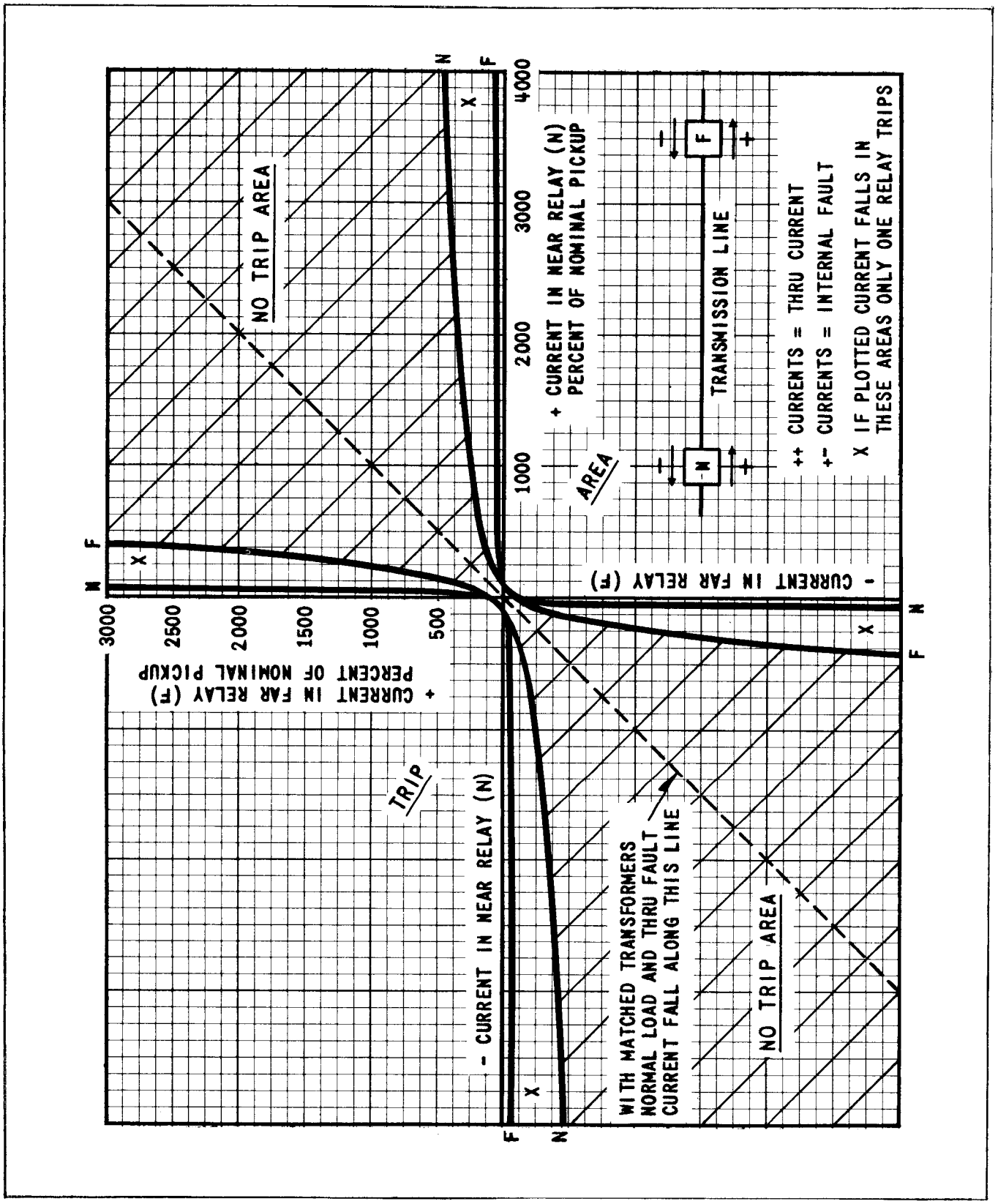

** Fig. 7 Typical Operating Characteristics of the HCB Relay System – Maximum Restraint Tap, with 4/1 Insulating Transformers and 2000-Ohm Pilot Wire. V_F of Near and Far Relays in Phase or 180° Out of Phase.*

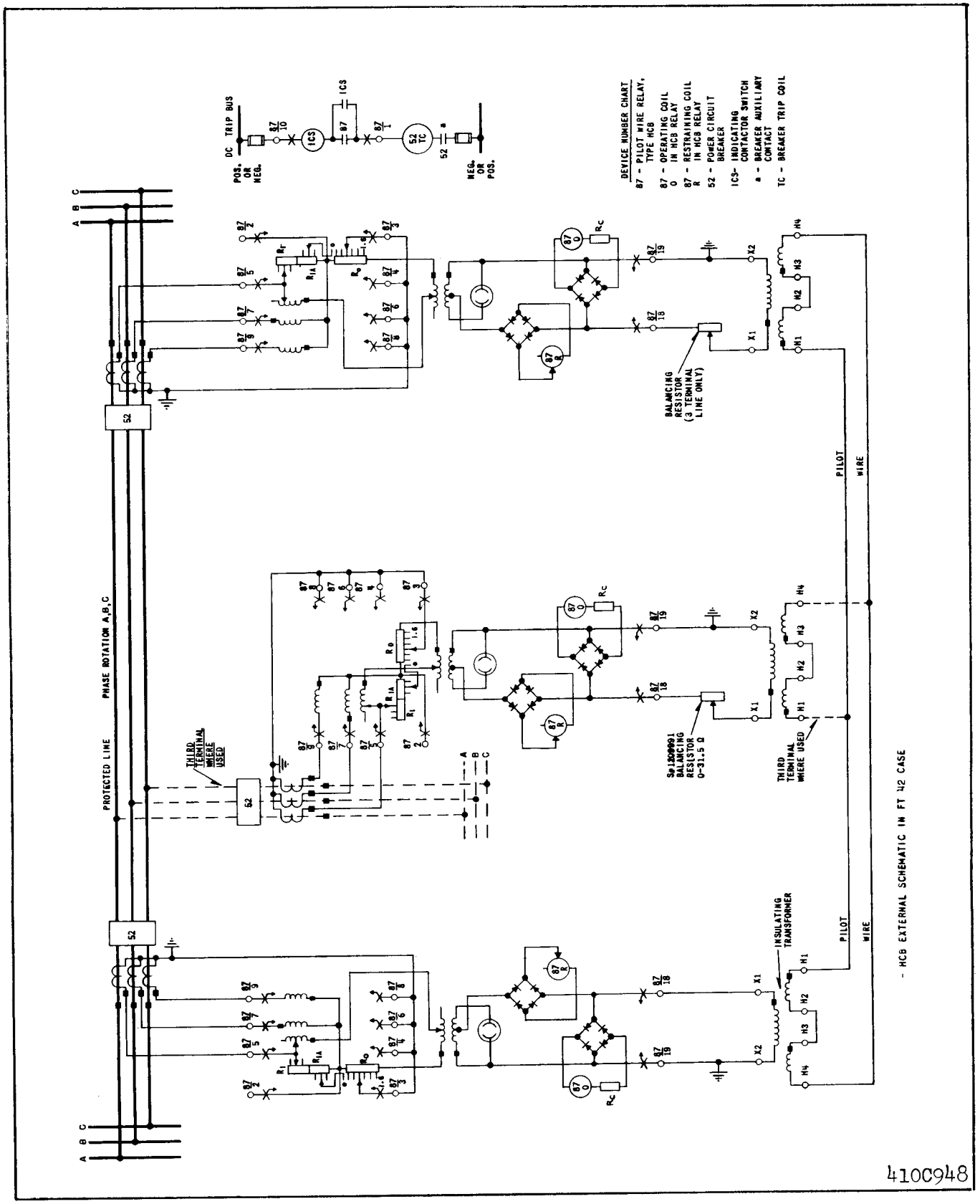

Fig. 8. External Schematic of the Type HCB Relay in FT-42 Case – Two- or Three-Terminal Line.

3) R_1 tap– 0.07, 0.10, 0.15
To change taps, loosen center screw and move tap link to desired setting. Insert two tap screws at each end of the tap link and tighten center screw as well as two tap screws.

4) Ro tap– 0.39, 0.51, 0.68, 0.90, 1.2 and 1.6
To change taps, loosen center screw and move tap link to desired tap. Tap screw and center screw to be tight after tap change is made.

* 5) Ria Taps – (0.07, 0.10, 0.15)
Note: The Ria taps are utilized where no zero sequence sensitivity is desired. It is recommended that these taps be set in the same tap as the R_1 tap for all applications.

To change taps, loosen center screw and move tap link to desired tap. Tap screw and center screw to be tight after tap change is made.

INDICATING CONTACTOR SWITCH (ICS)

The only setting required on the ICS is the selection of the 0.2 or 2.0 ampere tap setting. This selection is made by connecting the lead located in front of the tap block to the desired setting by means of the connecting screw.

SETTING CALCULATIONS

The HCB relay has four sets of taps: R_1, T, R_0, and restraint taps. The following discussion establishes limits for the various tap settings under different operating conditions. It should be kept in mind that settings to obtain operation on minimum internal fault conditions are based on the total fault current that flows into the protected line from all terminals.

TERMS

R_1, T, R_0 – Relay taps

I_{3p} – total minimum internal 3-phase secondary fault current fed from all terminals. divided by the number of terminals (2 or 3)

I_L – maximum secondary load current flowing through the protected line.

I_g – total minimum secondary ground fault current fed into the protected line from all terminals, divided by the number of terminals.

$I_{nom.}$(P-P) – nominal internal phase to phase fault sensitivity.

$I_{nom.}$(P-G) – nominal internal line to ground fault sensitivity.

R_{Nc} (I), R_{Nc} (II) – current transformer ratio at Station I and II respectively.

PHASE FAULT SENSITIVITY

The phase fault pickup is determined by the R_1 and T taps. In order to operate on the minimum line-to-line fault current, the R_1 and T taps should be set for not more than:

$$\frac{T}{R_1} = 5I_{3P} \qquad (7)$$

In order to prevent operation on load current if the pilot wires become open circuited, the R_1 and T taps should be set for not less than:

$$\frac{T}{R_1} = 10I_L \qquad (8)$$

The available taps are:

R_1: 0.07, 0.10, and 0.15

T : 4, 5, 6, 8, 10, 12, and 15

Where sufficient fault current is available, it is recommended that the relays be set as follows:

$$\frac{T}{R_1} = 1.25 \times 10I_L = 12.5I_L \qquad (9)$$

The required T/R_1 ratio may be obtained by any combination of T and R_1. However, the T tap must be set the same at all stations. The R_1 taps may be utilized to compensate for different CT ratios with two-terminal lines if the pilot-wire loop resistance is 1000 ohms or less. Auxiliary CT's and identical R_1 tap settings must be used with different main CT ratios on all three-terminal lines and on two-terminal lines with more than 1000 ohms loop resistance in the pilot wire.

GROUND FAULT SENSITIVITY

The ground fault pickup is determined by R_0 and T taps. (T should be determined by the phase setting.) In order to operate on the minimum line-to-ground fault current, the R_0 tap setting should be not less than:

$$R_0 = \frac{0.2T}{I_g} \qquad (10)$$

The available R_0 taps are: 0.39, 0.51, 0.68, 0.90, 1.2, and 1.6.

The R_{1A} taps, 0.07, 0.10, and 0.15, are utilized to set $R_0 = 1/3\ R_1$, where no zero sequence sensitivity is desired. Equation (10) does not apply for these three taps.

For overhead lines, it is recommended that the 1.6 R_0 tap be used to obtain maximum sensitivity.

For cable circuits, where the line charging current exceeds 5% of nominal pickup current, set R_0 for about:

$$R_0 = \frac{T}{7.5}$$

The R_0 taps need not be identical as required with the R_1 taps for three terminal lines and two terminal lines over 1000 ohms pilot wire resistance, where the zero sequence relay currents at the line terminals are not identical for an external fault. However, for a conventional line section the R_0 taps are set in the same proportion as are the R_1 taps.

RESTRAINT TAP

Set in maximum restraint tap for all two-terminal lines. Set in minimum restraint tap for all three-terminal lines. The use of maximum restraint on two terminal applications allows the relay to be used for all pilot wires as indicated in Table I. The use of minimum restraint on three terminal applications compensates for the desensitizing effect of a third terminal.

Note: The relay pick-up calibration must be changed if set in the minimum restraint tap. See "Adjustments and Maintenance."

TAPPED LOADS

Where one transformer bank is tapped to a line protected with two HCB relays, the critical point is to set above the fault current flow for a fault on the other side of the bank. Set the R_1 and T taps for not less than:

$$\frac{T}{R_1} = 5I_{3PL} \qquad (11)$$

where I_{3PL} = total current for a 3-phase fault on the low side of the bank.

Note that the tapped bank must not act as a ground source for high-side faults (e.g. high side connected in delta). Ordinarily this means that the R_0 tap settings need not be changed, since no zero-sequence current flows in the line when the low side is grounded.

SETTING EXAMPLE

CASE I

Assume:

Two-terminal line.

CT ratio =	600/5
Full-load current = I_L =	400A
Minimum 3-phase internal fault current:	
Through Station I =	1500A
Through Station II =	2500A
Minimum internal line-to-ground fault current:	
Through Station I =	400A
Through Station II =	0

Phase fault pickup:

$$\frac{T}{R_1}\text{(maximum)} = 5I_{3P} = 5 \times \frac{1500 + 2500}{2} \times \frac{5}{600} = 83.3$$

$$\frac{T}{R_1}\text{(maximum)} = 10I_L = 10 \times 400 \times \frac{5}{600} = 33.3$$

The phase fault current is sufficient to allow the relay to be set to prevent tripping on an open-circuited pilot wire. Therefore, set:

$$\frac{T}{R_1} = 12.5I_L = 41.7.$$

Set both relays for: $T = 4$, $R_1 = 0.1$.

The nominal pick-up current from equation 6 for a phase-to-phase fault is:

$$I_{nom}(P\text{-}P) = \frac{T}{2.89R_1} = \frac{4}{0.289} = 13.8 \text{ amperes,}$$

$$\left[I_{nom}(P\text{-}P) = \frac{T}{1.92R_1} \text{ for three-terminal lines}\right]$$

Ground fault pickup:

$$R_0\ \text{(minimum)} = \frac{0.2T}{I_g} = \frac{0.2 \times 4}{400/2} \times \frac{600}{5} = 0.48$$

An R_0 tap exceeding 0.48 will provide tripping. As recommended for overhead lines:

Set $R_0 = 1.6$.

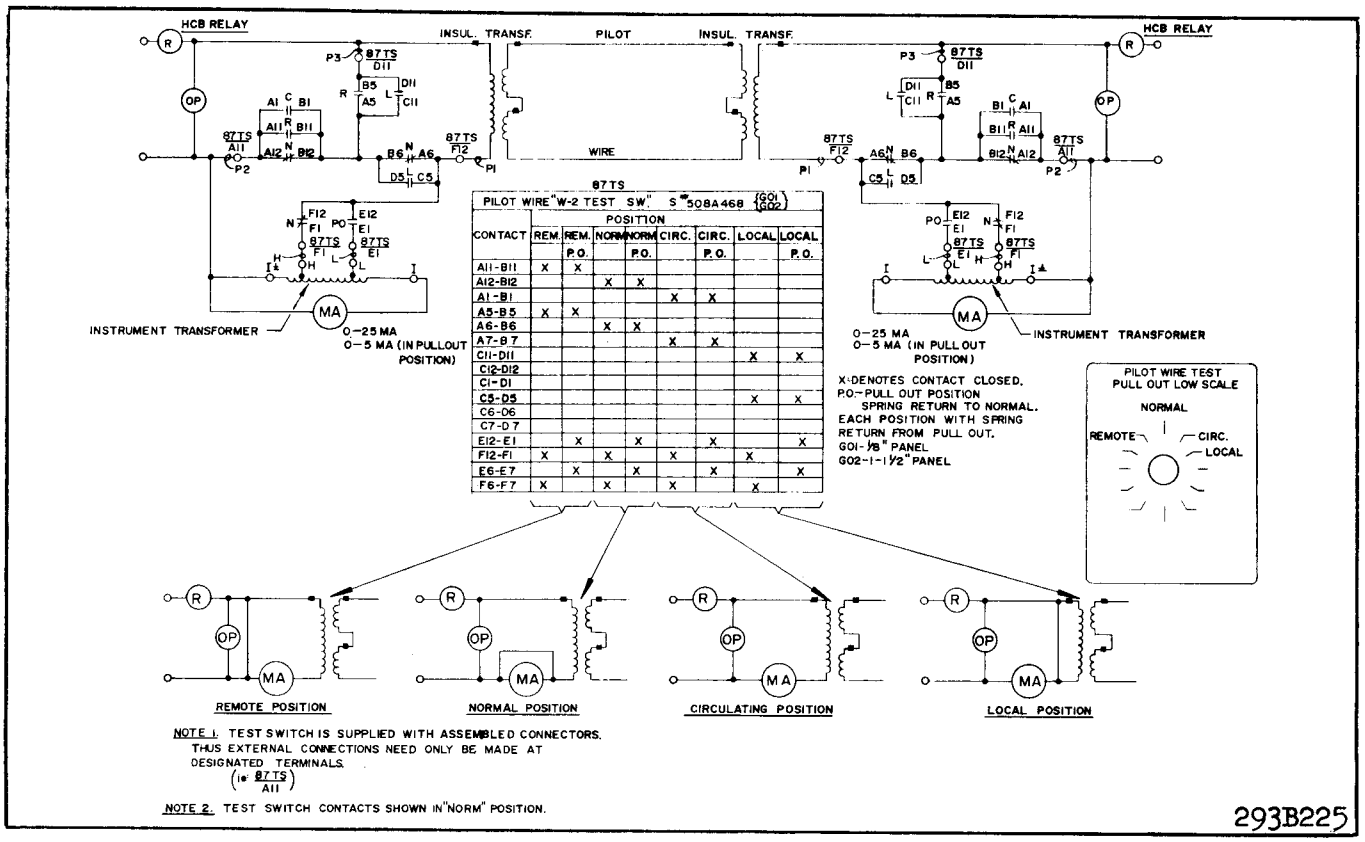

Fig. 9. HCB Relay Test Circuits with S#508A468601-G02 Type W-2 Switch and S#291B318A09 Milliammeter 0- 5-25 ma.

The ground fault nominal pickup is:

$$I_{nom}(P\text{-}G) = \frac{0.4T}{R_0} = \frac{1.6}{1.6} = 1.0 \text{ ampere,}$$

$$\left[I_{nom}(P\text{-}G) = \frac{0.6T}{R_0} = \text{for three-terminal lines}\right]$$

Restraint tap.

Use maximum restraint tap.

CASE II (DIFFERENT CT RATIOS)

Assume 400/5 CT's at Station II and 600/5 CT's at Station I, with less than 1000 ohms pilot wire loop resistance.

At Station I, set $R_0 = 1.6$ as in Case I. However, set $R_1 = 0.15$ to obtain R_1 settings proportional to the CT ratio. From equation 6:

$$T = 12.5R_1I_L = 12.5 \times 0.15 \times 400 = 7.5$$

Set T = 8

Station II settings are:

$$R_1 = 0.15\frac{R_{Nc}(II)}{R_{Nc}(I)} 0.15 \times \frac{400}{600} = 0.10$$

T = 8 (Same as Station I)

$$R_0 = 1.6 \times \frac{400}{600} = 1.07 \text{ (Set 1.2)}$$

INSTALLATION

The relays should be mounted on switchboard panels or their equivalent in a location free from dirt, moisture, excessive vibration, and heat. Mount the relay vertically by means of the four mounting holes on the flange for semi-flush mounting, or by means of the rear mounting stud or studs for projection mounting. Either a mounting stud or the mounting screws may be utilized for grounding the relay. The electrical connections may be made directly to the terminals by means of screws for steel panel mounting or to the terminal studs furnished with the relay for thick panel mounting. The terminals studs may be easily removed or inserted by locking two nuts on the stud and then turning the proper nut with a wrench.

For detailed Flexitest case information, refer to I.L. 41-076.

ADJUSTMENTS AND MAINTENANCE

CAUTION *Make sure that the neon lamp is in place whenever relay operation is being checked.*

ACCEPTANCE TESTS

The following tests are recommended when the relay is received from the factory. If the relay does not perform as specified below, the relay either is not calibrated or it contains a defect.

Main Unit

Connect the relay to the insulating transformer, as shown in Figure 8, and set $R_1 = 0.10$, $R_0 = 1.6$, $T = 4$, and maximum restraint tap. With the insulating transformer terminals H1 and H4 open circuited, measure the minimum pick-up current, I_{79} (min.), with current applied through terminals 7 and 9. This value should be:

$$I_{79} \text{ (min.)} = 6.94 \pm 5\% \text{ amperes.}$$

Now, connect a resistance, R_{PW}, across H1 and H4 of the insulating transformer, with a 10-mfd capacitor connected between H2 and H3. Connect a capacitor, C_{PW}, in parallel with R_{PW}. With R_{PW} and C_{PW} set as specified in Table II suddenly apply $I_{35} = 30$ amperes (through terminals 3 and 5).

TABLE II

Rpw Test - Max. Restraint Tap

$R_1 = 0.10$, $R_0 = 1.6$, $T = 4$

Insulating Transformer Ratio	Rpw † in ohms		Cpw in microfarads
4 to 1	1200	1900	0.75
6 to 1	2700	4300	0.33

† The relay should not operate at the lower value of Rpw, but should operate at the higher value.

Additional tests for the sequence filter and the operating unit are described under "Calibration Check." These latter tests are not required unless the relay fails to meet the acceptance tests.

Indicating Contactor Switch (ICS)

Close the main relay contacts and pass sufficient direct current through the trip circuit to close the contacts of the ICS. This value of current should not be greater than the particular ICS tap setting being used. The indicator target should drop freely.

CALIBRATION CHECK

The following tests are recommended whenever a check on the relay calibration is desired.

Over-all Relay Check

Over-all calibration can be checked by the procedure described under "Acceptance Tests." If the relay has been calibrated in the minimum restraint tap (factory calibration is made in the maximum restraint tap), the R_{PW} test should be made in accordance with Table III instead of Table II.

TABLE III

Rpw Test - Min. Restraint Tap

$R_1 = 0.10$, $R_0 = 1.6$, $T = 4$

Insulating Transformer Ratio	Rpw † in ohms		Cpw in microfarads
4 to 1	800	1400	0.75
6 to 1	1800	3100	0.33

† The relay should not operate at the lower value of Rpw, but should operate at the higher value.

Sequence Filter: Remove tap screw T and connect a high-resistance voltmeter across this open-circuited point by connecting to the tap plate and to one of the saturating transformer taps at the rear of the tap block. Energize the relay with $I_{79} = 6.94$ amperes (terminals 7 and 9). The measured open-circuit voltage, V_F, should be:

$$V_F = 8R_1 \pm 5\% \text{ volts.}$$

$$\text{(e.g., if } R_1 = 0.1,\ V_F = 8 \times 0.1 = 0.8 \text{ volt.)}$$

Repeat this voltage measurement with $I_{59} = 6.94$ amperes.

Operating Unit: The following test will check the polar unit calibration and the performance of the rectifiers. Connect a variable non-inductive resistor across the high-voltage terminals of the insulating transformer (H1 to H4), and connect d-c milliammeters in series with the operating and restraining coils of the polar unit by opening these circuits. (The restraint can be opened at the tap circuit for max. and min. restraint. The operating circuit has to be opened at the polar unit.) These milliammeters should have low resistance and should be capable of reading in the order of 20 to 25 ma in the operating coil and 100 to 150 ma in the restraining circuit. Using $T = 4$, $R_1 = 0.1$, $R_0 = 1.6$, energize the relay with $I_{35} = 10$ amperes (terminals 3 and 5) and increase the variable

resistance across the insulating transformer high-voltage terminals until the relay just trips. The values obtained should conform substantially to the following equations:

For minimum restraint

$$I_O = 0.12\ I_R + 8$$

For maximum restraint

$$I_O = 0.16\ I_R + 8$$

where I_O and I_R are operating and restraining coil coil currents, respectively, in milliamperes. The results are subject to variations between individual relays, due to different exciting impedances of the insulating transformers. However, the value should never be lower than:

For minimum restraint

$$I_O = 0.12\ I_R + 4$$

For maximum restraint

$$I_O = 0.16 I_R + 4$$

CALIBRATION PROCEDURE

If the factory calibration has been disturbed, the following procedure should be followed to recalibrate the relay.

FILTER CALIBRATION

A. R_1 Taps

* 1. Disconnect T current tap link and place Ro tap in 1.6

2. Connect voltmeter (low-reading, high resistance rectox) across relay terminal 2 and the common of T tap block.

3. Pass 5 amperes a.c. into terminal 7 and out terminal 9 of the relay.

4. Adjust the corresponding R_1 slide wire position (see Fig. 2 for location) to be within limits of following table for each specified setting of R_1 tap screw.

R. Tap Setting	Volts A.C.
.15	0.865 ± .008
.10	0.577 ± .007
.07	0.433 ± .005

B. R_{1A} Taps

* 1. Disconnect T current tap link and set Ro in O tap.

2. Connect a.c. voltmeter across relay terminal 3 and the common connection of R_{1A} and Ro (see Fig. 2 for location).

3. Pass 5 amperes a.c. into terminals 5 and out terminal 3.

4. Adjust the corresponding R_{1A} slide wire position (see fig. 2 for location) to within limits of following table for each specified setting of R_{1A} Tap screw

R_{1A} Tap Setting	Volts A.C.
.15	0.250 ± .005
.10	0.167 ± .003
.07	0.125 = .003

C. Ro Taps

No adjustments can be made on the Ro resistors. Value of resistance can be checked by passing 5 amperes a.c. through terminal 3 and out terminal 9. T tap must be disconnected. Following voltages should be measured across terminal 2 and the specified tap of Ro.

Ro Tap Setting	Volts A.C.
.39	1.85 ± 2.05
.51	2.45 ± 2.68
.68	3.28 ± 3.60
.90	4.33 ± 4.70
1.20	5.78 ± 6.27
1.60	7.72 ± 8.38

* **Polar Unit Contact Adjustment:** Place a 0.088 to 0.095 inch feeler gage between the right hand pole face and the armature. This gap should be measured near the front of the right hand pole face. Bring up the back-stop screw until it just makes with the moving contact. Place a 0.045 to 0.050 feeler gage between the moving contact and the stationary contact on the left-hand side of the polar unit. Bring up the stationary contact until it just makes with the gage and lock in place. For relays with double contacts make sure that both upper and lower contacts make at the same time.

Polar Unit Calibration: Connect the restraint tap link in the position in which it will be used. Connect terminals X1 and X2 of the insulating transformer across the pilot-wire terminals of the relay. Connect the relay taps on T = 4, R_1 = 0.1, R_O = 1.6.

The sensitivity of the polar unit is adjusted by means of two magnetic, screw type shunts at the rear of the element. Looking at the relay front view, turning out the right hand shunt decreases the amount of current required to close to the right hand stop. Conversely, drawing out the left hand shunt decreases the amount required to trip the relay. In general, the farther out the shunt screws are turned, the greater the toggle action will be and as a result, the dropout current will be lower. In adjusting the polar elements, be sure that a definite toggle action is obtained, rather than a gradual movement of the armature.

Start with both shunt out 4 to 5 turns. Short out the pilot wire on the high side of the insulating transformer. Momentarily apply 40 amperes from terminals 5 to 3. Now remove the short from H1 to H4 and, adjust the right hand shunt such that the contacts close with a positive snappy toggle action at I_{79} = 6.9 to 7.0 amperes. After this adjustment is complete, short out pilot wire and apply 40 amperes momentarily from terminals 5 to 3. Now remove the short from H1 to H4 and, check pickup for I_{79}. If value has changed from before, it will be necessary to re-adjust the right hand shunt. Several trials may be necessary before the pickup will be constant. In each case, the 40 amperes should be applied before any additional adjustments are performed on the shunt.

After the shunts have been adjusted, apply 40 amperes momentarily to terminals 3 and 5 of the relay with the pilot wire open. Pickup will be approximately 5 amperes with current applied to terminals 7 and 9. This change in pickup is due to a change in the residual magnetism in the polar unit of the relay. In the de-energized state, the permanent magnet of this unit produces a flux or magnetic bias to keep the contacts open. When the unit is energized, a second flux (electrical) is produced which either adds to or substracts from the magnetic flux. When the electrical flux is removed, the magnetic structure of the polar unit is changed. Hence, the flux produced by an excess of restraint current, adds to the magnetic bias, and the flux produced by an excess of operating current substracts from the magnetic bias. This characteristic is inherent in the polar unit and has no affect on the overall performance of the relay.

After the shunt adjustment has been made, change the input current connections to terminals
* 3 and 5. Apply 40 amperes with H, and H4 terminals shorted. Remove short and measure pickup with current applied to terminals 3 and 5. The relay should trip with I_{35} = 0.45 to 0.55 amperes.

ROUTINE MAINTENANCE

Contacts: All contacts should be cleaned periodically. A contact burnisher, S#182A836H01, is recommended for this purpose. The use of abrasive material for cleaning is not recommended, because of the danger of embedding small particles in the face of the soft silver and thus impairing the contact.

ICS Unit: Close the main relay contacts and pass sufficient direct current through the trip circuit to close the contacts of the ICS. This value of current should not be greater than the particular ICS tap setting being used. The indicator target should drop freely.

Operating Unit: Check the relay minimum pickup, with the pilot wires disconnected from terminals H1 and H4 of the insulating transformer, by energizing with I_{79} current (terminals 7 and 9). Pick-up current should be:

$$I_{79}\ (\text{min}) = \frac{T}{5.77\ R_1} \pm 5\%\ \text{amperes}$$

Additional tests are recommended with the pilot wire connected as described under "Complete System Test."

COMPLETE SYSTEM TEST

At the time of the initial installation and at subsequent maintenance periods, it is recommended that the following relay system checks be made, with the pilot wire connected.

MINIMUM PICKUP

PRECAUTION: In making this test with the relay in place on the switchboard, it is necessary to connect the load box in the circuit between the relay and the "hot" side of the supply circuit. If this precaution is not observed, it is possible to cause a short circuit between the grounded station service supply circuit and the ground of the current transformer circuit.

The minimum pickup of each relay should be checked before starting the system tests. With taps as specified in Fig. 10, and the pilot wire circuit open on the high side of the insulating transformer, each relay should trip with I_{AN} = 0.45 to 0.55 amp. or with I_{BC} = 6.9 to 7.0 amperes

With the pilot wire connected, energize one relay with I_{AN} and determine the minimum pick-up of all relays. Repeat this test by energizing the other relay or relays. Record these values for future reference. If the neon lamp is lit during these tests, the pilot circuit is presenting too high a shunting effect on the relays.

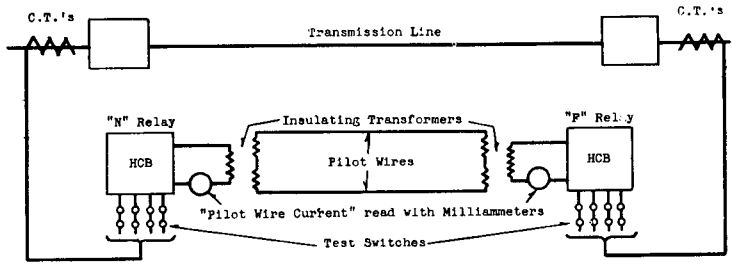

Note: The line should be carrying through load current amounting to at least 1.5 amperes as measured in the secondary of the Current Transformers. This test is based on the ratio of the C.T.'s being the same at each end of the line, in which case set the taps of both relays to $R_1 = .1$; $R_0 = 1.6$; $T = 4$ for this test.

	RELAY "N"					RELAY "F"				
Test No.	Test Switch	Relay Current	Relay Trip	"Pilot Wire Current" Circulating	"Pilot Wire Current" Remote	Test Switch	Relay Current	Relay Trip	"Pilot Wire Current" Circulating	"Pilot Wire Current" Remote
1		A,B,C,N	No	(1)	(1)		A,B,C,N	No	(1)	(1)
2		A,C,B,N	No	(2)	(2)		A,C,B,N	No	(2)	(2)
3		A,N	Yes	(3)	(0) *		O	Yes	(3)	(3) (4)
4		O	Yes	(3)	(3) (4)		A,N	Yes	(3)	None
5		A,N	No	(3)	(3)		A,N	No	(3)	(3)
6		A,N	Yes	(6)			B,C,N	Yes	(6)	

REMARKS

Tests 1 and 2 are to check normal positive sequence rotation of phases.
Tests 3 and 4 simulate internal Phase A to Ground fault with single end feed.
Test 5 simulates an external Phase A to Ground fault. (5)
Test 6 simulates an internal Phase A to Ground fault, with equal feed from the two ends, since $I_B + I_C = - I_A$, with balanced load.

LEGEND OF TEST SWITCH SYMBOLS:

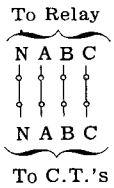

Normal Connection. All Currents to Relay.

EXAMPLE

Phase A current from C. T.'s to Relay. Phase B and C. T.'s shorted to neutral.

(1) The "pilot wire current" will vary depending upon the magnitude of the through load current and the characteristics of the pilot wire. See Figures 11 and 12.
(2) Since the relay is temporarily connected for negative sequence, it should have practically zero output in this test.
(3) These readings may be "off scale" depending upon the magnitude of the load current.
(4) The relay at this station should reset when the "far" current is being read because the local relay will be receiving no current from either the pilot wire or the current transformers.
(5) Test 4 and 5 can be repeated using phase B to neutral current, and again with phase C to neutral current, but this is not strictly necessary on the basis that, having proved the phase sequence with tests 1 and 2, and having proved the correspondence of phase A at the two ends of the line with test 5, then phases B and C must be correct.
(6) Some pilot wire current will be read, depending upon the magnitude of the distributed capacity of the pilot wire in combination with the magnetizing impedance of the insulating transformer.

Fig. 10. HCB Relay System Testing Procedure.

INTERPRETATION OF TESTS

1. Tests #1 and #2, Figure 10, are designed to indicate that the relays have been wired with the correct phase rotation. When the phase rotation is deliberately and temporarily changed by test #2, then the pilot-wire currents should be substantially zero. Any small value of pilot wire current which appears may be due to either a small unbalance in the load current, or else due to harmonic currents flowing through the line. If either relay has inadvertently been connected for the wrong phase rotation, then the fact will be apparent when reading local current. Local current should be interpreted from Figure 13, with the amount of load current which is present. If no current is read on test #1 for the local relay, and if current for test #2 is in line with Figure 13, then it is an indication that that particular relay has been connected for the wrong phase rotation.

a. In the event the pilot wire is open-circuited, the apparent circulating current will be quite low, being limited to the magnetizing current of the insulating transformer. Also, it will not be possible to read current from the remote end.

b. If the pilot wire is short-circuited, then the circulating current will be near normal, but it will not be possible to read current from the remote end.

2. If the pilot wire is reversed, (a) the circulating current will be low on test #1, but it will be possible to read pilot-wire current from the remote relay. (b) Both relays will trip on test #5. If the monitoring relays also suffer from this error in connection, then the error should be corrected at one relay location by reversing the connections to the H_1-H_4 terminals of the insulating transformer. However, if the monitoring relays do not suffer from this error, then the polarity of the pilot wires insofar as the HCB relay installation is concerned may be suitably corrected by making a reversal of connections either at the X_1-X_2 terminals of one insulating transformer, or at the output terminals of the relay, #18 and #19, Figure 3.

3. If the phases are rolled at one end of the line, then this will be picked up by test #5. On test #5, neither relay should trip when phase-A-to-neutral current is delivered to each of the two relays with the switching arrangement as shown and discussed. However, if one or both relays trip, then try checking the near relay, phase-A-to-neutral current, against phase-B-to-neutral current at the far relay. Also, check phase-A-to-neutral current at the near relay against phase-C-to-neutral current at the far relay. If, for example, neither relay trips when phase-A-to-neutral current is used for the near relay and phase-B-to-neutral current is used at the far relay, then it is an indication that what had been thought to be phase B current at the far location really identifies with phase A current at the near location. This identifies a rolled-phase condition, and also indicates the correction which must be made in the connections of the current transformer input to the relay.

4. One combination of errors which is somewhat tricky to pick up is the combination of pilot wires reversed plus a rolled-phase condition at one end. Let it be assumed that the pilot wire is reversed at the far end, making an error of 180 degrees. Then let it be assumed that the phases are also rolled by 120 degrees, thereby adding another error of 120 degrees. Adding these two together brings the total up to 300 degrees, which is within 60 degrees of what would be normal. Because of this, the only symptom which will appear in the first four tests is that the circulating current is likely to be lower than one would expect when read at one end or the other on test #1. However, test #5 may be used to identify this combination of errors. When the condition exists as described, when test #5 is extended to check phase A current at the near end against each of the three currents at the far end in turn, it will be found that at least one of the two relays will always trip. If this condition is found, reverse the pilot-wire connection, check out the rolled-phase condition and correct it, and then proceed with all six tests.

5. Test #6 is a final verification test.

* *Fig. 10 (continued)*

LOADED CIRCUIT TEST

In performing these tests, the following procedure should be used.

1. Standard testing equipment is recommended for permanent installation with the relays as shown in Fig. 9. If this equipment is not available, a similar portable test should be set up using a low-resistance-a-c milliammeter.
2. Red-handle flexitest case switch should be open to interrupt the breaker trip circuit.
3. A test crew is necessary at each substation with a means of communication between them.
4. When the test calls for delivering only specified currents to the relay, it is necessary to use a thin piece of insulating material in the ammeter test jack. For example, test #5 of Fig. 10 relay "N". To apply phase A to N current to the near relay only, the switches associated with terminals 6, 7, 8, 9 of figure 3 must be open. Opening switches 6 and 8 short circuits the current trans-
   * formers for phases B and C. **However, it is also necessary to insert the insulating material in the ammeter test jacks associated with terminals 7 and 9 in order to break up the connection between the filter in the relay chassis and the grounded input circuits from current transformers in phases B and C.**
5. To facilitate making test #2 of Fig. 10, two ammeter test plugs wired together with a foot or two of flexible wire should be used. With these two test plugs suitably wired together, one of them may be shoved in the ammeter test jack associated with terminal 7, Figure 3, and the other shoved in the ammeter test jack associated with terminal 9, Figure 3. (This should not be done until the switches for terminals 6 and 8 have been open, thus short circuiting the current transformers involved). It is desirable to wire the test plugs together such that when one is shoved in the one ammeter test jack with the red side up, and the other is shoved in the other ammeter test jack with the black side up, it is then known that the B and C phase currents to the relay have been reversed at the input to the chassis in line with test #2, Fig. 10. After these test plugs are properly inserted, it is then appropriate to close the switches associated with terminals 6 and 8, Fig. 3, in order to remove the short circuit from the current transformer secondaries.

Perform the tests as indicated in Figure 10 recording the milliammeter readings and the relay input current at the same instant, for future reference. The headings "Circulating" and "Remote" in the table of Figure 10 refer to the test switch positions, "CIRC" and "REM." For tests 3 to 6 of Figure 10, the input current should be increased to about 1.5 amperes by an auxiliary current transformer, if the secondary load current is below this value. Also record the input and output readings with the test switch in the "Local" position. Typical values for the "Local" position readings are shown in Figure 13.

THREE TERMINAL LINES

A similar procedure to Figure 10 should be followed for three-terminal line applications. In this case open the line circuit breaker at one terminal, and disconnect the loads from the pilot wire terminals of the HCB relay at that terminal. This leaves the remaining portion of the line operating as a two terminal line. Now perform the normal tests as outlined for the two terminal line system test. When these tests have been satisfactorily completed, return the third terminal relay to normal and close the breaker at that station. Repeat the above procedure with a different breaker open and relay disconnected. This will complete the check of the three terminal line.

ENERGY REQUIREMENTS

The volt-ampere burden of the type HCB relay is practically independent of the pilot-wire resistance and of the current tap used. The following burdens were measured at a balanced three-phase current of 5 amperes:

For tap 4, $R_1 = 0.075$ and $R_0 = 0.39$

Phase A	1.25 volt-amperes	0°
Phase B	0.30 volt-amperes	285°
Phase C	0.90 volt-amperes	45°

For tap 4, $R_1 = 0.15$ and $R_0 = 1.6$

Phase A	2.3 volt-amperes	120°
Phase B	4.6 volt-amperes	285°
Phase C	5.3 volt-amperes	45°

The angles above are the degrees by which the current lags its respective voltage.

The continuous rating of the relay is 10 amperes.

The two-second overload ratings of the relay are 150 amperes phase and 125 amperes ground currents.

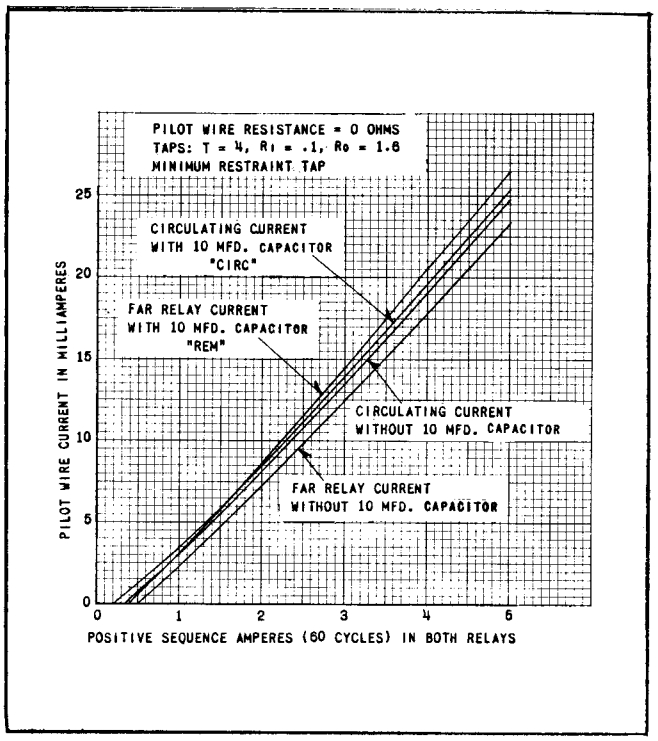

Fig. 11. Typical Test Output vs. Input Relay Current in a Two-Terminal Line with Zero Pilot-Wire Resistance.

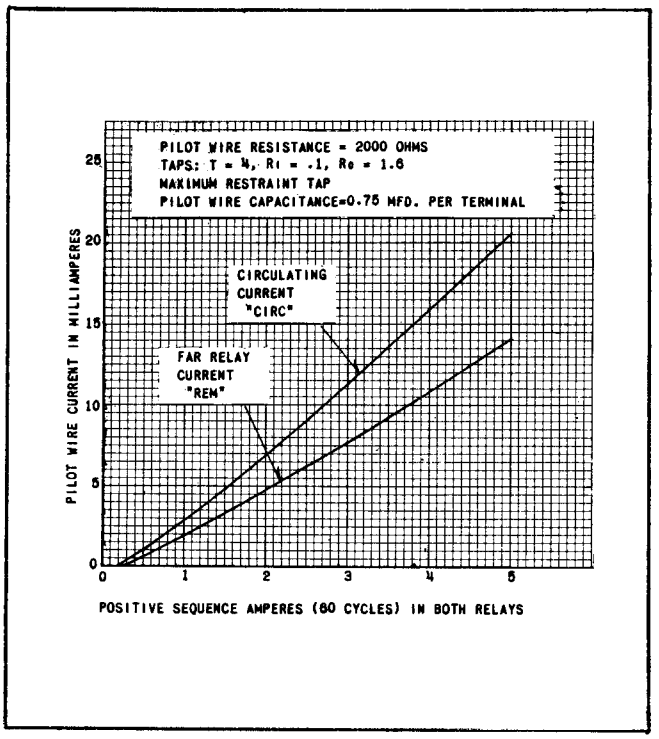

Fig. 12. Typical Test Output vs. Relay Current in a Two-Terminal Line with 2000-Ohm Pilot-Wire Resistance With or Without 10-mfd Capacitor.

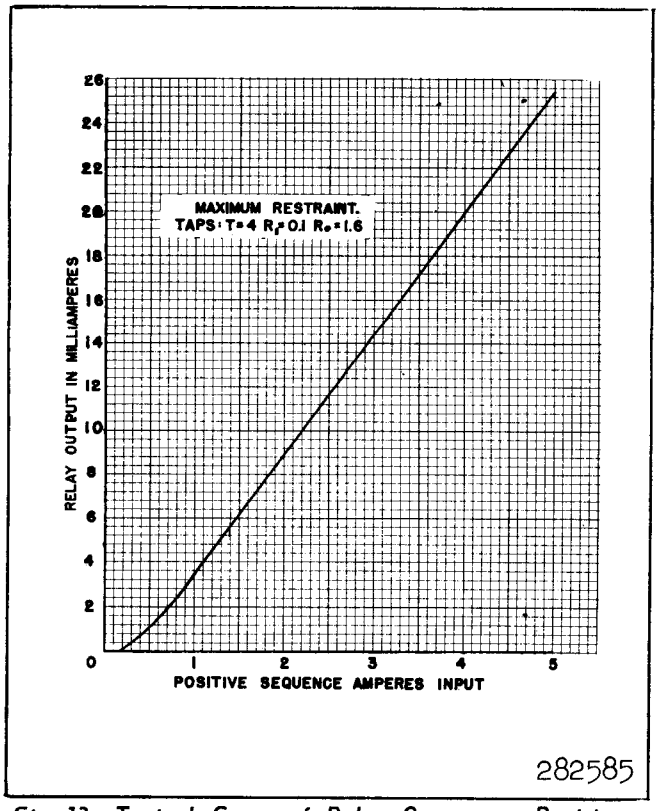

Fig. 13. Typical Curve of Relay Output vs. Positive-Sequence Input – Test Switch in Local Position.

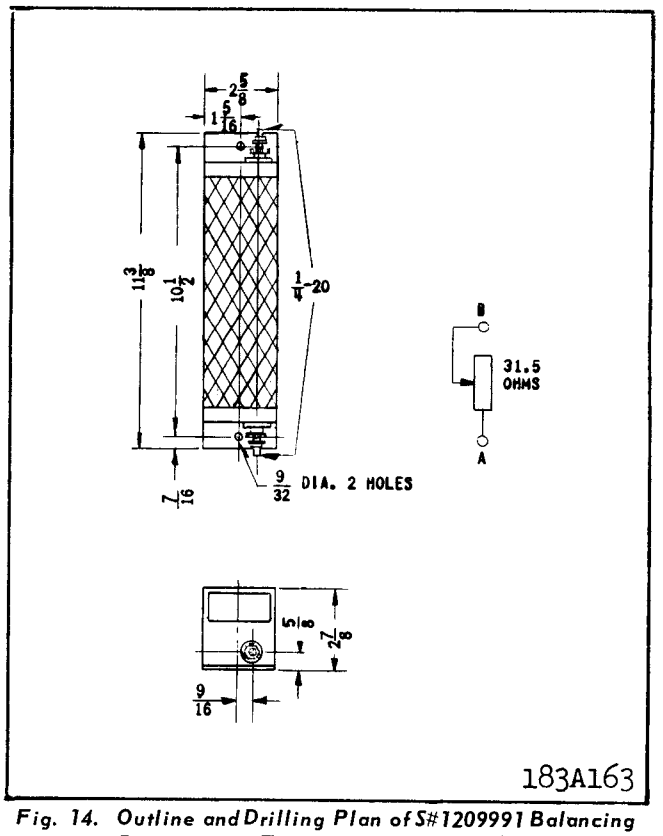

Fig. 14. Outline and Drilling Plan of S#1209991 Balancing Resistor for Three-Terminal Line Applications.

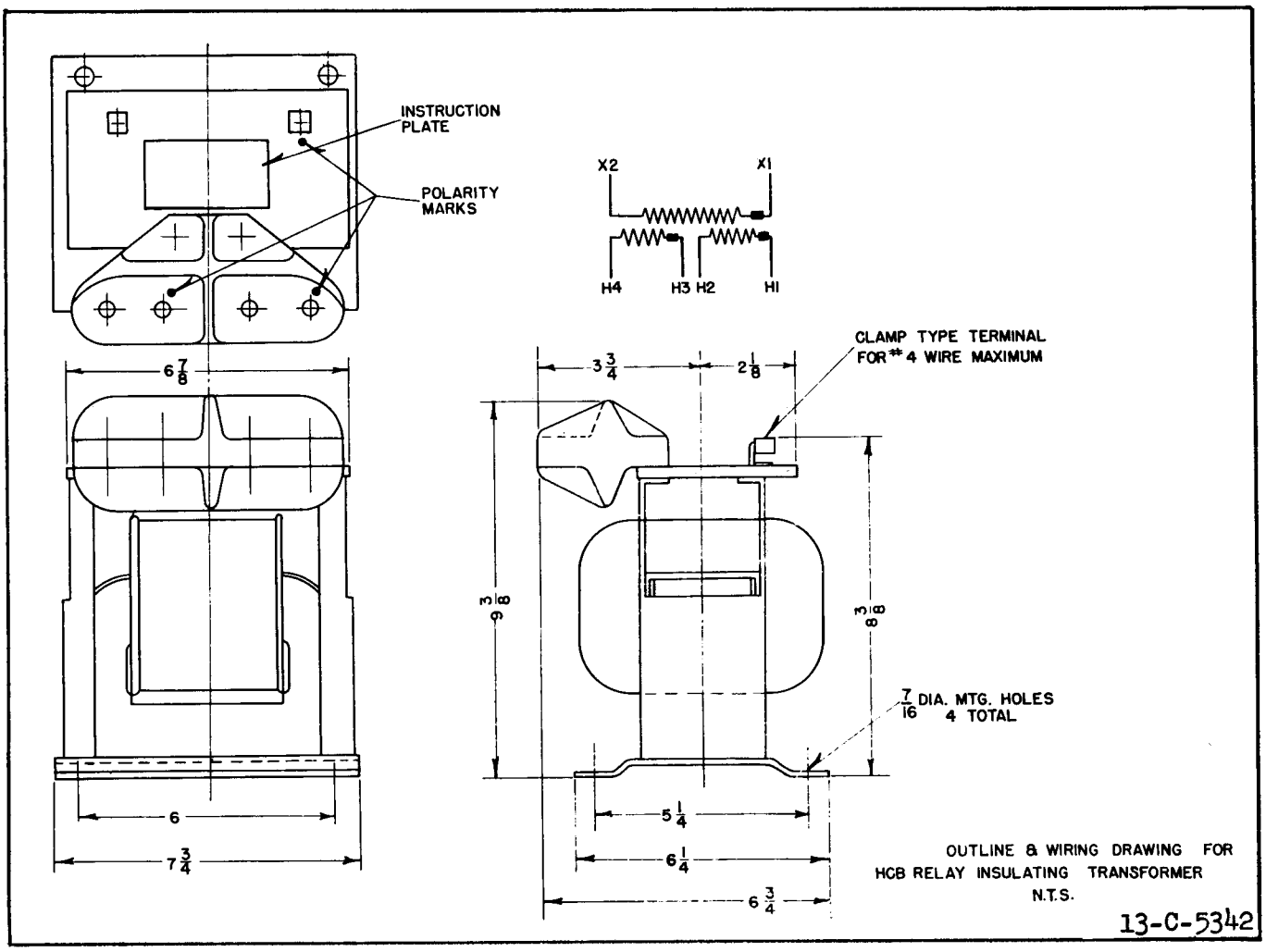

Fig. 15. Outline and Drilling Plan of HCB Relay Insulating Transformer.

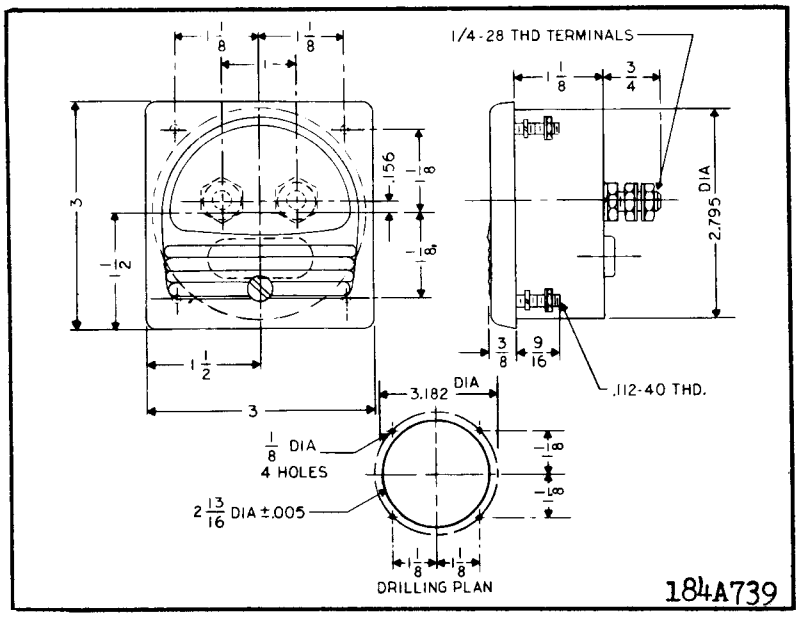

Fig. 16. Outline and Drilling Plan of the Semi-Flush-Type Test Milliammeter.

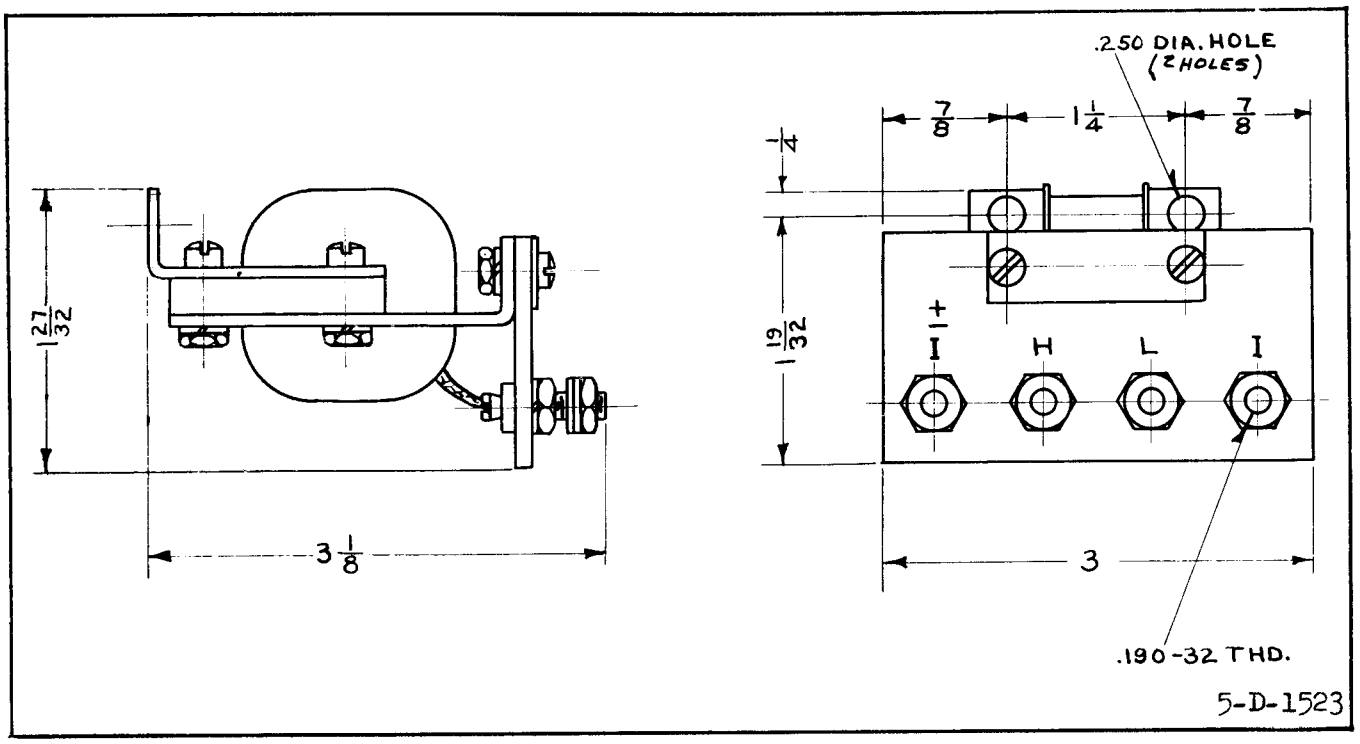

Fig. 17. Outline of the Test Milliammeter Auxiliary Transformer.

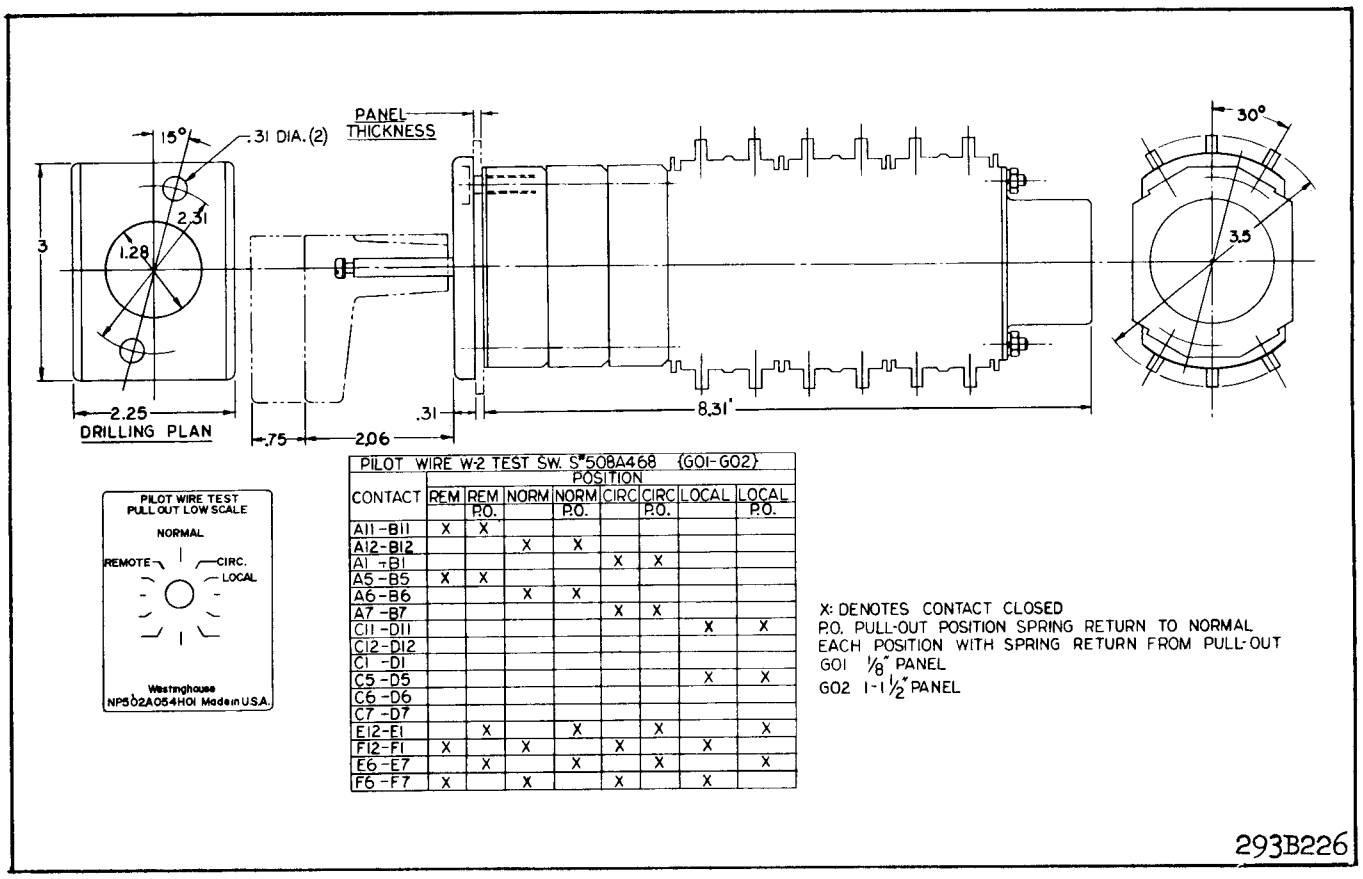

PILOT WIRE W-2 TEST SW. S#508A468 (G01-G02)

CONTACT	POSITION REM	REM P.O.	NORM	NORM P.O.	CIRC	CIRC P.O.	LOCAL	LOCAL P.O.
A11-B11	X	X						
A12-B12			X	X				
A1 -B1					X	X		
A5 -B5	X	X						
A6-B6			X	X				
A7 -B7					X	X		
C11-D11							X	X
C12-D12								
C1 -D1								
C5 -D5							X	X
C6 -D6								
C7 -D7								
E12-E1		X		X		X		X
F12-F1	X		X		X		X	
E6 -E7		X		X		X		X
F6 -F7	X		X		X		X	

X: DENOTES CONTACT CLOSED
P.O. PULL-OUT POSITION SPRING RETURN TO NORMAL
EACH POSITION WITH SPRING RETURN FROM PULL-OUT
G01 1/8" PANEL
G02 1-1 1/2" PANEL

Fig. 18. Outline and Drilling Plan of the Type W-2 Test Switch.

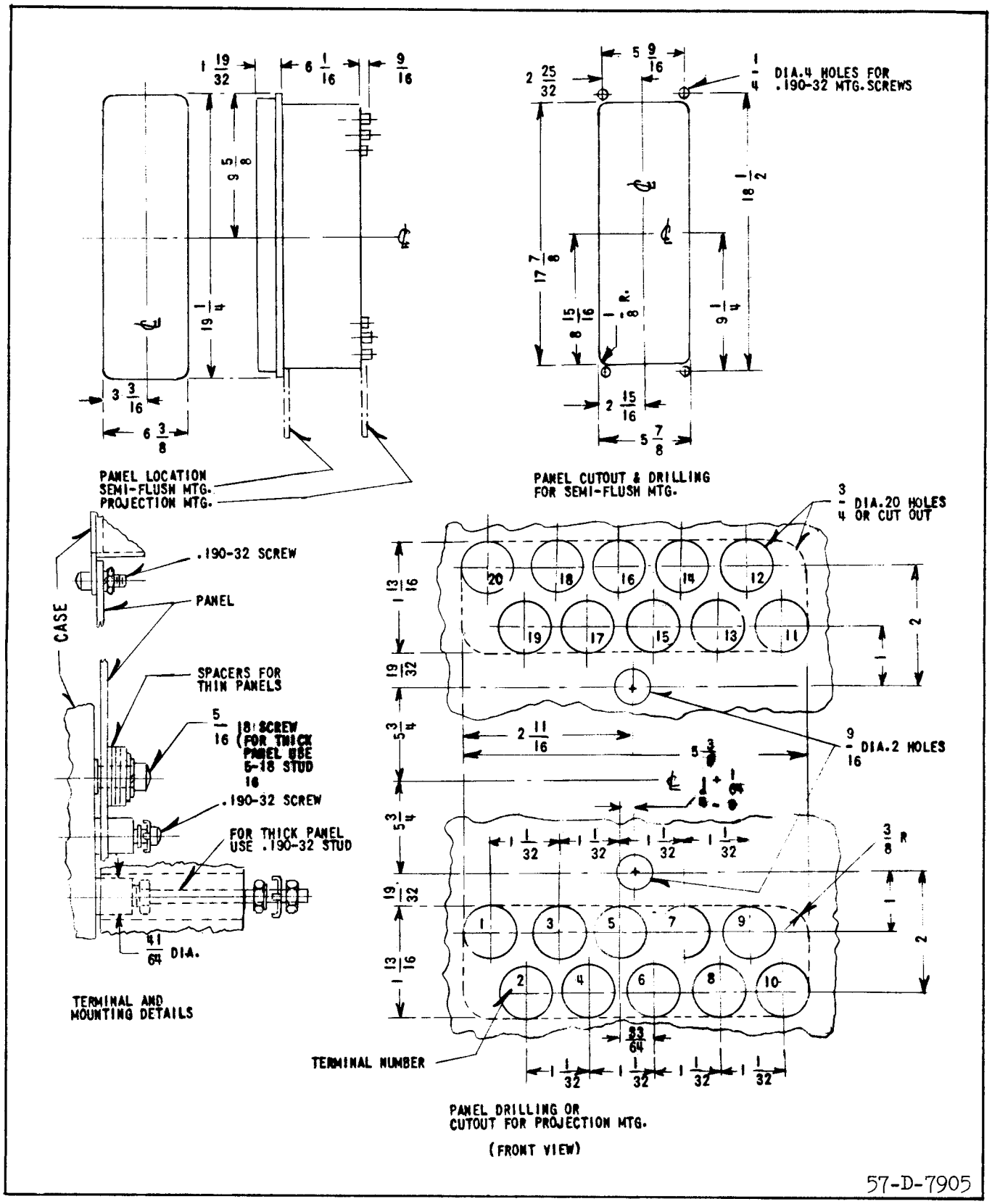

Fig. 19. Outline and Drilling Plan for the Type HCB Relay in the Type FT-42 Case.

PILOT-WIRE ENERGY

The current and voltage impressed on the pilot wire do not exceed 100 milliamperes and 60 volts. The wave form and magnitude of the pilot-wire current are such that telephone interference is within the limits allowed by the Bell Telephone Company. This permits the use of leased telephone lines as a pilot-wire channel.

RENEWAL PARTS

Repair work can be done most satisfactorily at the factory. However, interchangeable parts can be furnished to users who are equipped for doing repair work. When ordering parts, always give the complete nameplate data.

APPROXIMATE RESISTANCE VALUES OF COMPONENTS IN HCB RELAY

Transformer	Secondary Winding		Start to Tap 20 to 30 ohms
			Start to Finish 110 to 140 ohms
Polar Unit	Operating Coil		290 - 320 ohms
Polar Unit	Restraining Coil	Maximum	12 - 16 ohms
		Minimum	9 - 12 ohms
Resistor	Rc		41 - 44 ohms
Tube Resistor	Ro		As Marked on Ro Tap Plate
Looped Resistor	R1		As Marked on R1 Tap Plate
	R1A		As Marked on R1A Tap Plate
Rectifiers			IN91 Germanium Diodes
Indicating Contactor Switch			0.2 amp. Tap 6.5 ohms
			2.0 amp. Tap 0.15 ohms

WESTINGHOUSE ELECTRIC CORPORATION

RELAY-INSTRUMENT DIVISION **NEWARK, N. J.**

Printed in U.S.A.

INSTALLATION • OPERATION • MAINTENANCE

INSTRUCTIONS

TYPE HCB PILOT WIRE RELAY SYSTEM

CAUTION Before putting protective relays into service, remove all blocking which may have been inserted for the purpose of securing the parts during shipment, make sure that all moving parts operate freely, inspect the contacts to see that they are clean and close properly, and operate the relay to check the settings and electrical connections.

APPLICATION

The type HCB relay is a high speed pilot wire relay designed for the complete phase and ground protection of two and three terminal transmission lines. Simultaneous tripping of the relay at each terminal is obtained in about 20 milliseconds for all faults. A complete installation for a two terminal line consists of two relays, two insulating transformers, and an interconnecting pilot wire circuit. For a three terminal line, three relays, three insulating transformers, and a wye-connected pilot wire circuit with branches of equal series resistance are required.

CONSTRUCTION

The relay consists of a combination positive and zero phase sequence filter, a saturating auxiliary transformer, two full wave rectifier units, a polar type relay unit, a neon lamp, and an indicating contactor switch (ICS), all mounted in a single case. The external equipment normally supplied with the relay consists of an insulating transformer, a milliammeter and test switch.

SEQUENCE FILTER

The sequence filter consists of a three-legged iron core reactor and a set of resistors designated R1 *and Ro. The reactor has three windings; two primary and a tapped secondary winding, wound on the center leg of a "F" type of lamination. The secondary taps are wired to the circularly arranged R1 tap connections in the front of the relay. The R1 tap links also connect to the R_1 resistor (looped resistance wire). Ro consists of three tube resistors with taps wired to the circularly arranged Ro tap connections in the front of the relay. R_{1A} taps are on the R_1 resistance *wire and are wired to the circularly arranged R_{1A} tap connections in the front of the relay.

SATURATING TRANSFORMER

The output of the sequence filter connects to the primary of a two-winding saturating transformer. The primary winding is tapped and wired to a tap block T in the front of the relay. The secondary winding is connected to the neon lamp and from a fixed tap to the relay coil circuits.

POLAR RELAY UNIT

This unit consists of a rectangular-shaped magnetic frame, an electromagnet, a permanent magnet, *and an armature with either one or two contacts. The poles of the cresent-shaped permanent magnet bridge the magnetic frame. The magnetic frame consists of three pieces joined in the rear with two brass rods and silver solder. These non-magnetic joints represent air gaps which are bridged by two adjustable magnetic shunts. The operating and restraint windings are concentrically wound around a magnetic core. The armature is fastened to this core at one end and floats in the front air gap at the other end. The moving contact is connected to the free end of a leaf spring.

RESTRAINT TAPS

A set of restraint taps are located on the front of the relay near the polar unit. These taps are the *maximum and minimum restraint taps of the relay.

INDICATING CONTACTOR SWITCH UNIT (ICS)

The d-c indicating contactor switch is a small clapper-type device. A magnetic armature, to which leaf-spring mounted contacts are attached, is attracted to the magnetic core upon energization of the switch. When the switch closes, the moving contacts bridge two stationary contacts, bypassing the main relay contacts. Also during this operation, two fin-

SUPERSEDES I.L. 41-971.2
*Denotes change from superseded issue.

EFFECTIVE AUGUST 1965

gers on the armature deflect a spring located on the front of the switch, which allows the operation indicator target to drop. The target is reset from the outside of the case by a push rod located at the bottom of the cover.

The front spring, in addition to holding the target, * provides restraint for the armature, and thus controls the pick-up value of the switch.

OPERATION

The connection of the HCB system of relays to the protected transmission line is shown in Fig. 8. In such a connection, the relays operate for faults within the line terminals but not for faults external to the protected transmission line. This is accomplished by comparing the relative polarities of voltages at opposite ends of the transmission line by means of a metallic pilot wire.

As shown in Figure 8, the composite sequence filter of each HCB relay receives three phase current from the current transformers of the transmission line. The composite sequence filter of the HCB converts the three-phase current input into a single-phase voltage output, V_F, of a magnitude which is an adjustable function of the phase A positive and zero sequence current. This voltage, V_F, is impressed on the primary wiring of the saturating transformer. The saturating transformer output voltage, V_S, is applied to the relay coils and to the pilot wire through an insulating transformer. The saturating transformer and a neon lamp across its secondary winding serve to limit the energy input to the pilot wire.

During an external fault, assuming matched relays, the magnitude of V_S at both stations will be the same. The relative polarities of the V_S voltages will be as shown in Figure 4. Since the voltages add, most of the current will circulate through the restraint coils and the pilot wire, with a minimum of operating coil current. The relative effects of the operating and restraint coil currents are such that the relay is restrained.

During an internal fault, the relative V_S polarities reverse. Since the V_S voltages now oppose each other, most of the current flowing in the restraint coils is also forced through the operating coils with a minimum of current in the pilot wire. This increase in operating current overcomes the restraining effect and both the relays operate.

Within limits, as defined in Figure 7 and under "Characteristics," all the relays will operate for an internal fault regardless of the fault current distribution at the various stations. The nominal pickup (total internal fault current) of the relaying system is equal to the minimum trip of a single relay multiplied by the number of relays. For example, if the pickup of each relay, with the pilot wire open, is 6 amperes, a two terminal line system has a nominal pickup of 2 x 6 = 12 amperes.

PILOT WIRE EFFECTS

In Figure 4 it can be seen that a short-circuited pilot wire will short circuit the relay operating coils. Depending on the location of the short, at least one of the relays will fail to trip during an internal fault. If the pilot wire is open circuited, almost all the restraint coil current will flow through the operating coil and the relay operates as an over-current device.

Excessive pilot wire series impedance will approach an open-circuited condition and the relays will operate during external faults. Excessive pilot wire shunt capacitance will approach a short-circuited condition and the relays will not operate.

OPERATING UNIT THEORY

The polar unit flux paths are shown in Figure 5. With balanced air gaps, the permanent magnet produces flux flowing in two paths, one through the front gaps and one through the rear gaps. This flux produces north and south poles, as shown. By turning the left shunt in, some of the flux is forced through the armature, making it a north pole. Thus, reducing the left-hand rear gap will produce a force tending to pull the armature to the right. Similarly, reducing the right-hand gap will produce a force tending to pull the armature to the left.

CHARACTERISTICS

The voltage, V_F, impressed by the filter upon the saturating transformer is:

$$* \; V_F = 2I_{A1} R_1 + I_{A0} (R_1 + 3R_0) \text{ volts} \qquad (1)$$

where R_1 and R_0 are the positive and zero sequence tap values, respectively;

I_{A1} and I_{A0} are the positive and zero sequence phase A current inputs, respectively, in amperes. *These are vector quantities.*

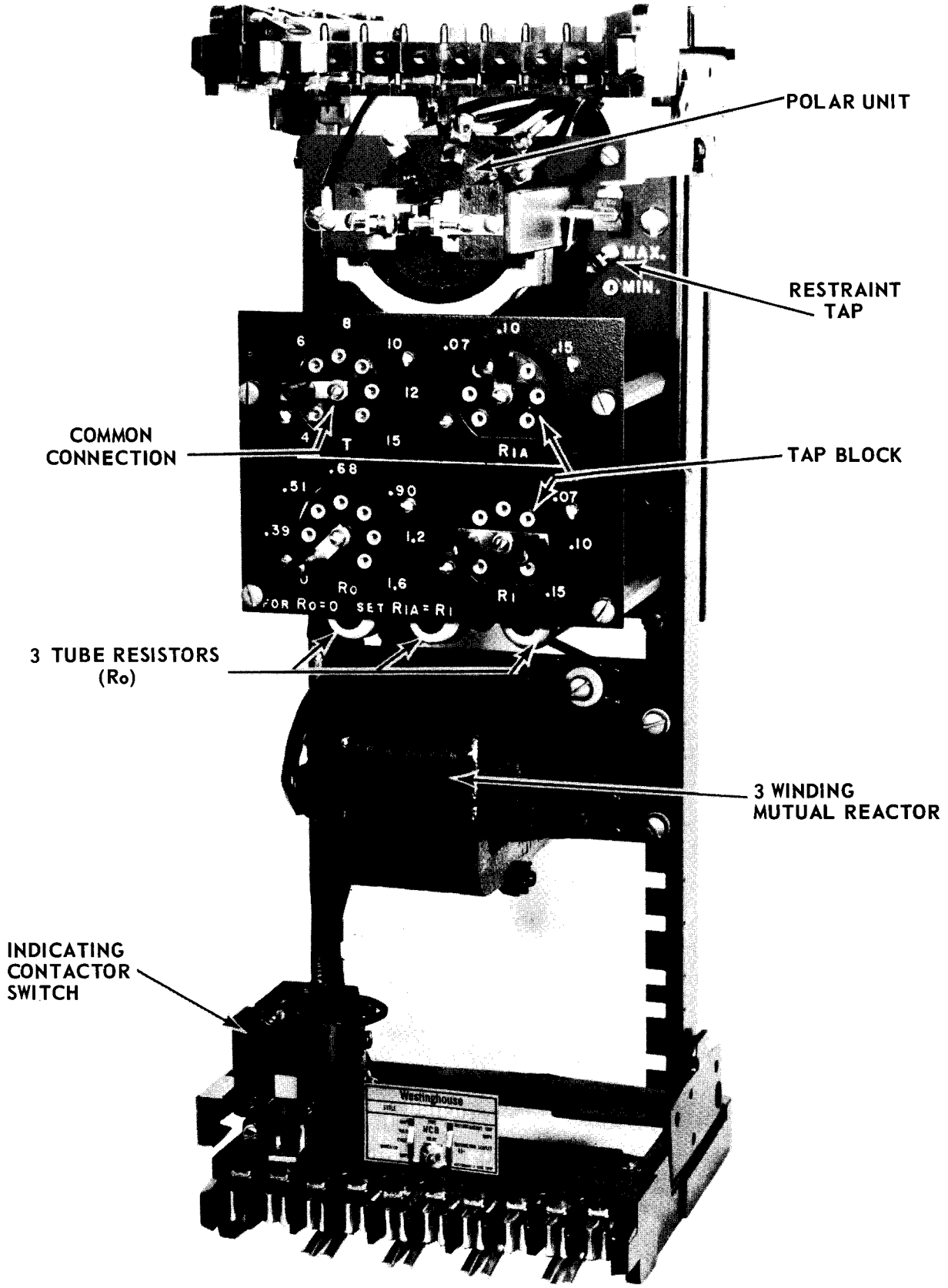

Fig. 1. Type HCB Relay Without Case (Front View).

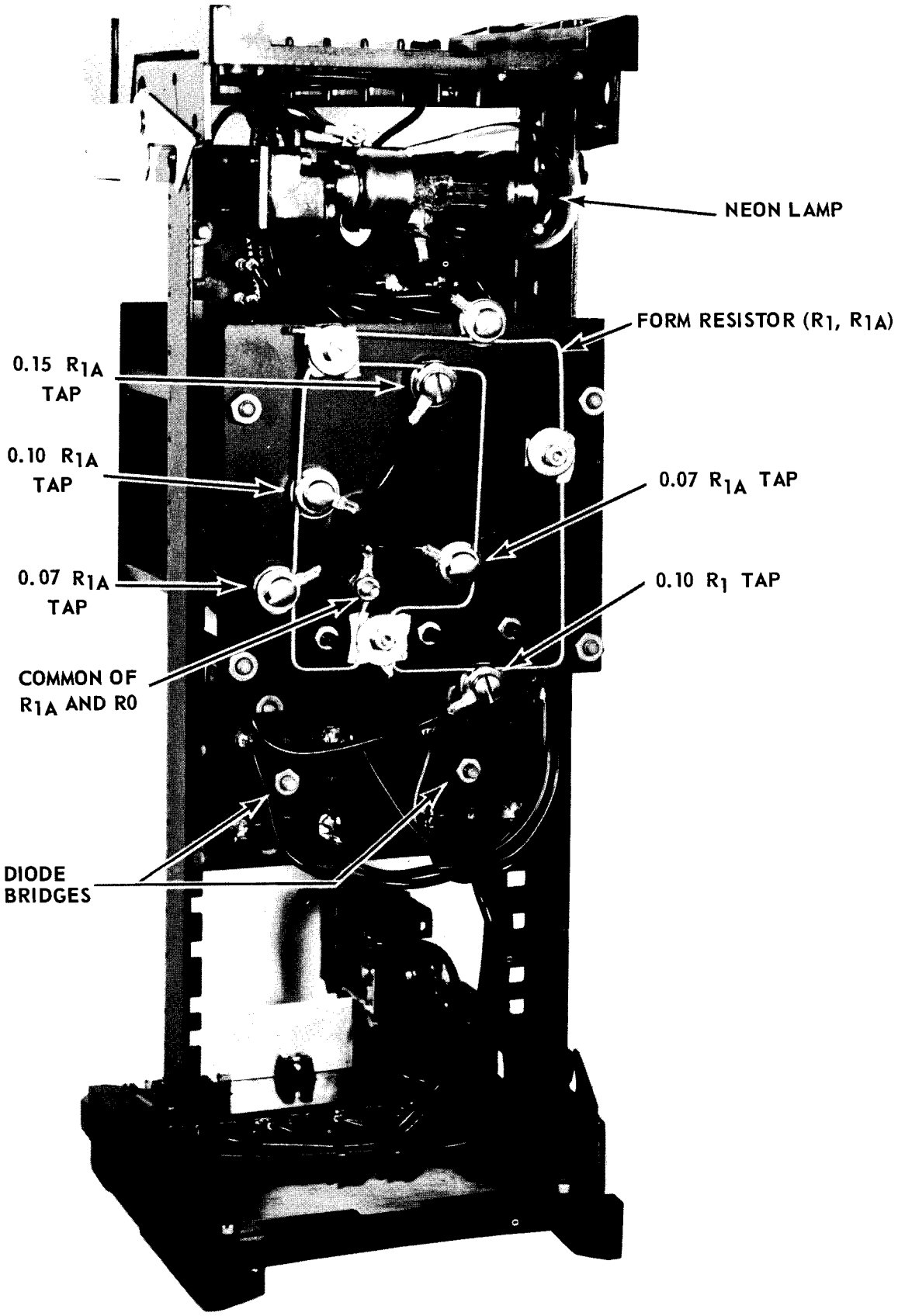

** Fig. 2 Type HCB Relay Without Case (Rear View).*

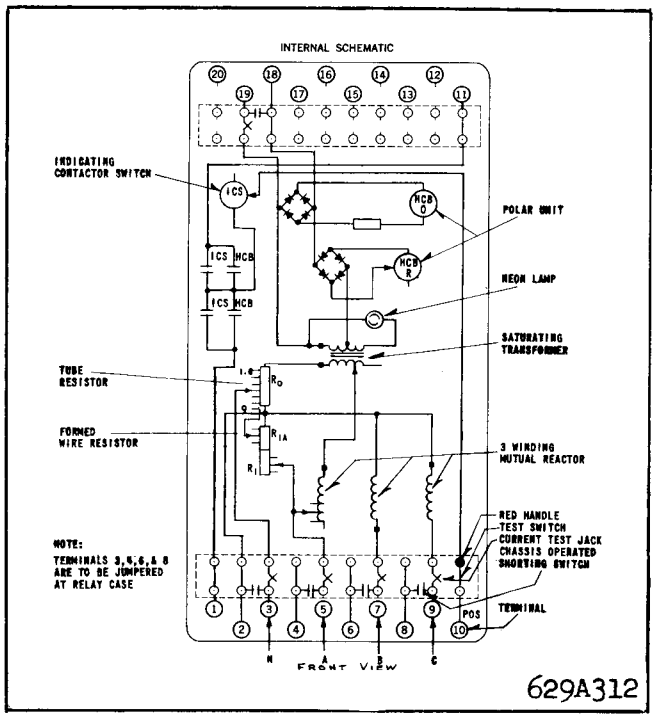

* *Fig. 3. Internal Schematic of the Type HCB Relay in FT-42 Case (Double Trip Circuit). For the Single Trip Relay the Circuits Associated with Terminal 11 are omitted.*

SINGLE RELAY PICKUP (PILOT WIRE OPEN) I_s

Single relay pickup, I_S, is defined as the phase current required to operate one relay with the pilot wire side of the insulating transformer open circuited (H1-H4). The single relay pickup point in terms of filter voltage is:

$$V_F = 0.2T \qquad (2)$$

where T is the saturating transformer tap value. Single relay pickup is defined by equating (1) & (2):

$$0.2T = 2\,I_{A1}\,R_1 + I_{A0}\,(R_1 + 3R_0) \qquad (3)$$

Current I_S varies with the type of fault. For example, for a 3 phase fault, $I_S = I_{A1}$, since only positive sequence current is present. Substituting $I_S = I_{A1}$ in Eq. (3) & rearranging, the 3 phase fault pickup is:

$$I_S = I_{A1} = \frac{0.2T}{2\,R_1} = \frac{T}{10R_1} \text{ (3 phase fault)} \qquad (4)$$

If $R_1 = 0.1$, $R_0 = 1.6$ & $T = 4$:

$$I_S = \frac{T}{10R_1} = \frac{4}{10X0.1} = 4 \text{ amp. (3 phase fault)}$$

For a phase A to ground fault, if $I_{A1} = I_{A2} = I_{A0}$ (I_{A2} is the phase A negative sequence current):

$$0.2T = 2I_{A1}\,R_1 + I_{A1}\,(R_1 + 3R_0)$$

$$I_{A1} = \frac{0.2T}{3(R_1 + R_0)} = I_{A0}$$

But: $I_S = I_{A1} + I_{A2} + I_{A0}$

$$= 3I_{A1}$$

So: $$I_S = 3I_{A1} = \frac{0.2T}{R_1 + R_0} \text{ (A-G fault)} \qquad (5)$$

If $R_1 = 0.1$, $R_0 = 1.6$ & $T = 4$:

$$I_S = \frac{0.2T}{R_1 + R_0} = \frac{0.2x4}{0.1 + 1.6}$$

$$= \frac{0.8}{1.7} = 0.471 \text{ amp. (A-G fault)}$$

NOMINAL PICKUP (ALL RELAYS)

The nominal pickup, I_{nom}, is defined as

$$I_{nom} = KI_S \qquad (6)$$

where I_{nom} = total internal fault current
K = number of relays (2 or 3)
I_S = single-relay pickup with pilot wire disconnected (see above)

For example, for a phase-A-to-ground fault, $I_{A1} = I_{A0}$ with the pilot wire open circuited, the single-relay pickup was previously determined as $I_{AG} = 0.471$ ampere. For a two-terminal line, the nominal pickup for a phase-A-to-ground fault ($R_1 = 0.1$; Ro = 1.6; T = 4) is:

$$I_{nom} \text{ (A to G)} = 0.471K = 0.471 \times 2 = 0.942 \text{ ampere.}$$

MINIMUM TRIP (ALL RELAYS)

With equal inputs to all relays and zero pilot-wire shunt capacitance, the relays will operate at their nominal pick-up point. The minimum trip points will vary somewhat from nominal value, depending on the pilot-wire constants and the magnitude and phase angle of the various relay input currents. For example, Figure 6 shows the relay operating points for a two-terminal line, assuming input current to the near relay, only.

An example of the characteristics with various current distributions is shown in Figure 7. The filter

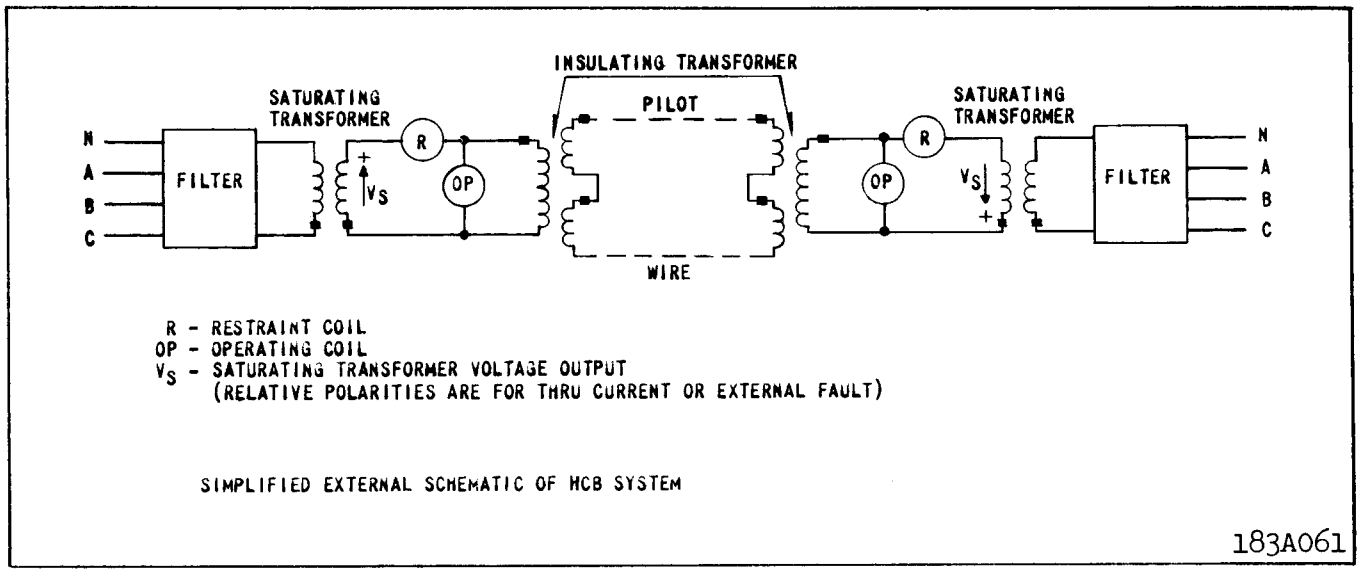

Fig. 4. Simplified External Schematic of the HCB Relay System.

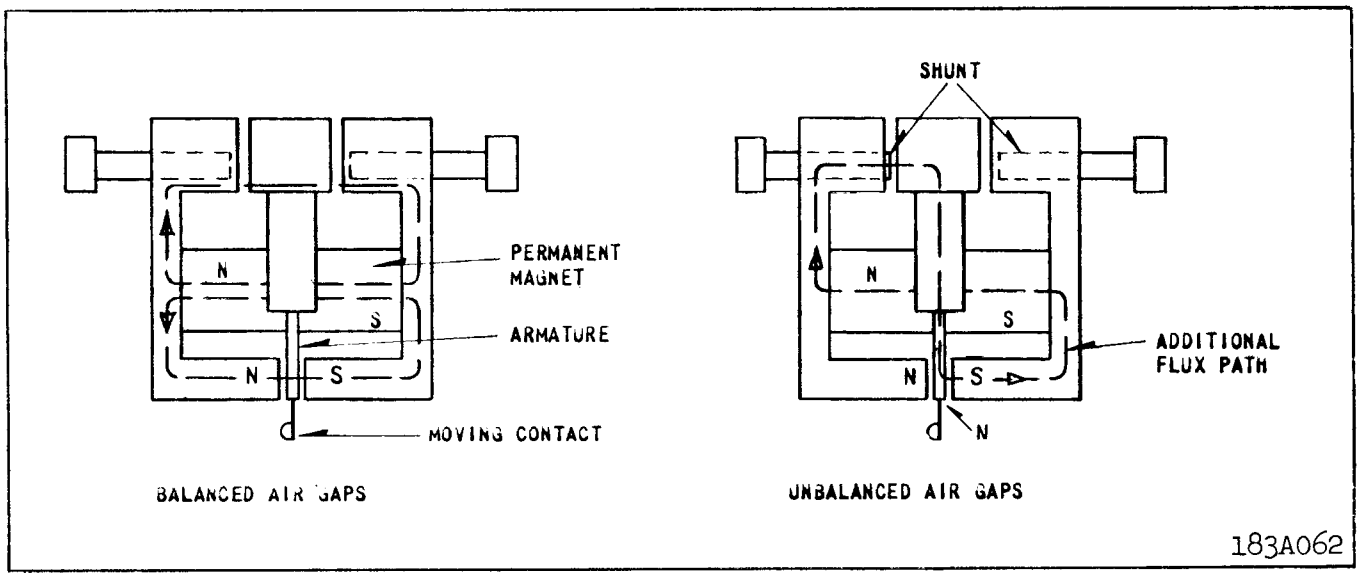

Fig. 5. Polar Unit Permanent Magnet Flux Paths.

output voltage, V_F, of each relay, as defined by equation (1) must be in phase or 180 degrees out of phase, in order for Figure 7 to apply.

INSULATING TRANSFORMER

Unless otherwise noted, all characteristics presented include an insulating transformer with each relay. Two ratios are available: 4/1 and 6/1. The high voltage side is connected to the pilot-wires.

PILOT-WIRE REQUIREMENTS

The relays should not be applied with pilot-wire series resistance or shunt capacitance exceeding the following values:

TABLE I

No. of Relays	Insulating Transformer Ratio			
	4/1		6/1	
	R_L	C_S	R_L	C_S
2	2000	1.5	—	—
3	500/LEG	1.8	1000/LEG	0.75

R_L = series loop resistance in ohms.

C_S = total shunt capacitance in microfarads.

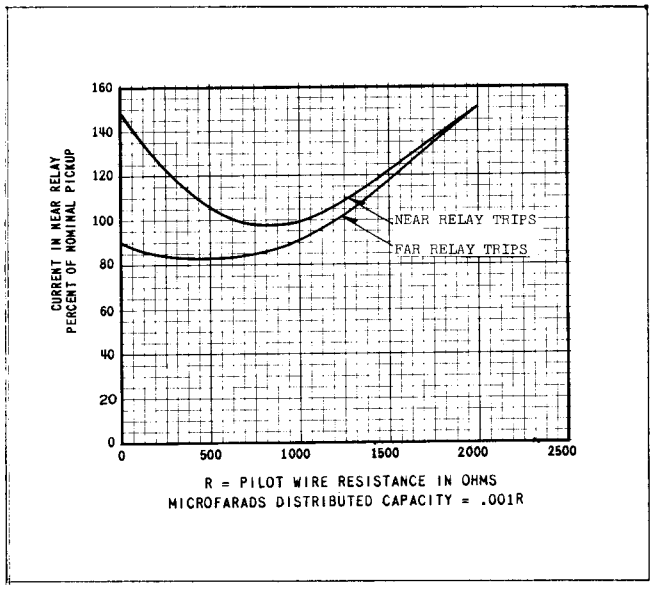

Fig. 6 Typical Curves Showing the Effect of the Pilot Wire on Minimum Trip Current, Two-Terminal Line (Maximum Restraint Tap). Insulating Transformer 4/1 ratio.

Where the shunt capacitance exceeds the above amount, it may be feasible in some cases to provide shunt reactors to compensate for the excessive capacitance. The amount of capacitance which can be compensated is limited and varies depending upon the magnitude of the pilot-wire distributed effect.

A shielded, twisted pilot wire pair, preferably of #19 AWG or larger, is recommended; however, open wires may be used if they are frequently transposed in areas of exposure to power circuit induction. The voltage impressed across either insulating transformer (H-1 to H-4) as a result of induction or a rise in station ground potential, should be less than 7.5 volts to prevent undesired relay operation.

For three-terminal applications, the loop resistance of all legs of the pilot wire must be balanced within 5 percent, with variable resistors as shown in Figure 8. The pilot wire resistance to be balanced is divided by 16 and 36 for the 4 to 1 and 6 to 1 ratio insulating transformers respectively, since the balancing resistors are located on the relay side of the insulating transformers.

Induced voltages and rises in station-ground potential may be handled by the following means:

* a) Neutralizing reactors may be connected in series with the pilot wire to hold the pilot wire potential close to the remote ground potential in the presence of a rise in station-ground potential. They do not limit pilot-wire voltages to safe values in the presence of a longitudinal induced voltage. When using the neutralizing reactor, the pilot-wire sheath should be insulated from station ground to minimize sheath-to-pari potential in the presence of a rise in station-ground potential. All other pairs in the cable which are connected to station ground should also be protected with neutralizing reactors to minimize pair-to-pair voltages.

b) Drainage reactors may be connected across the pilot wire and to ground through a KX642 protector tube. The drainage reactor is particularly effective in limiting pair-to-ground voltage in the presence of an induced voltage. When the tube flashes, both wires are connected to ground through the drainage reactor windings which offer a low impedance to ground but maintain a high impedance to an a-c voltage across the wires. Thus, the HCB system will operate normally even though the protector tube *has flashed over. The drainage reactor is not intended to handle a rise in ground potential.

c) The neutralizing and drainage reactors may be utilized together. If the neutralizing reactor is to be of any value, the drainage reactor through the KX642 protector tube must be connected to remote ground.

TRIP CIRCUIT

The main contacts will safely close 30 amperes at 250 volts d.c., and the seal-in contacts of the indicating contactor switch will safely carry this current long enough to trip a circuit breaker.

The indicating contactor switch has two taps that provide a pick-up setting of 0.2 or 2 amperes. To change taps requires connecting the lead located in front of the tap block to the desired setting by means of a screw connection.

SETTINGS

There are four settings in the relay. The correct tap setting should be determined as outlined under "Setting Calculations".

1) Restraint taps-maximum or minimum
   To change taps, connect the lead in front of the relay to the correct tap.

2) T tap- 4, 5, 6, 8, 10, 12, and 15
   To change taps, loosen center screw and move tap link to desired setting. Tap screw and center screw to be tight after tap change is made.

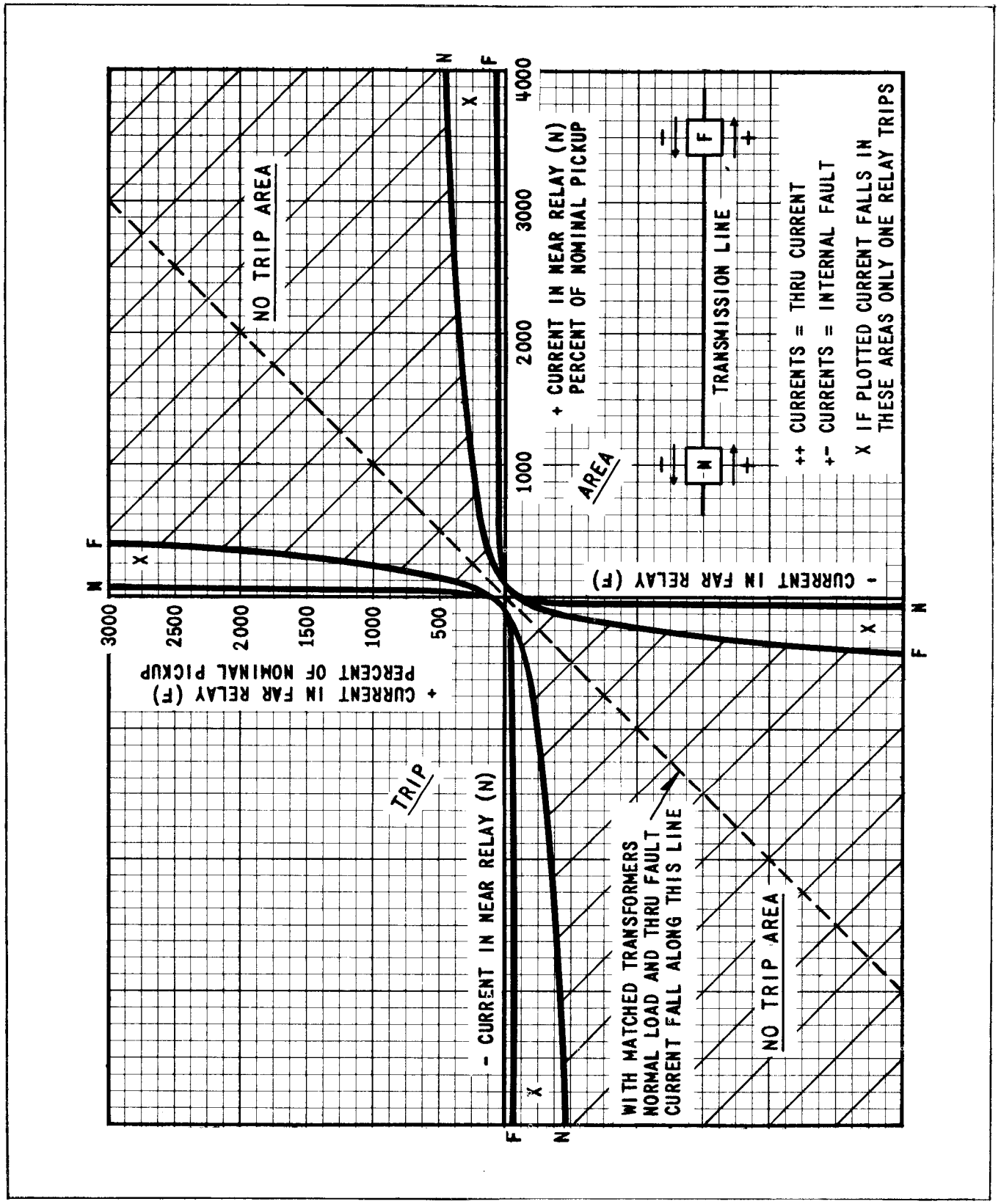

** Fig. 7 Typical Operating Characteristics of the HCB Relay System — Maximum Restraint Tap, with 4/1 Insulating Transformers and 200-Ohm Pilot Wire. V_F of Near and Far Relays in Phase or 180° Out of Phase.*

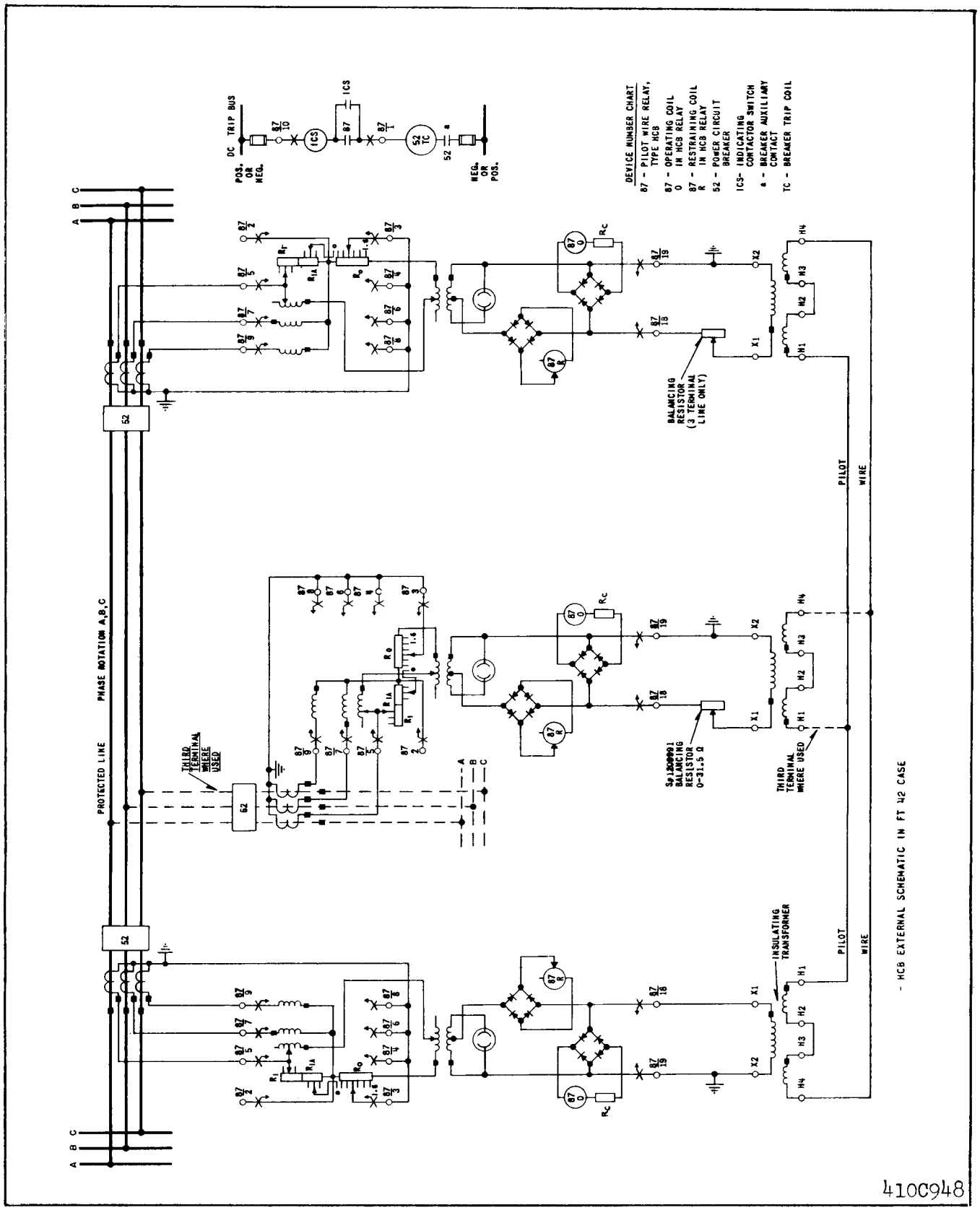

Fig. 8. External Schematic of the Type HCB Relay in FT-42 Case - Two- or Three-Terminal Line.

3) R_1 tap- 0.07, 0.10, 0.15
To change taps, loosen center screw and move tap link to desired setting. Insert two tap screws at each end of the tap link and tighten center screw as well as two tap screws.

*4) Ro tap– 0.39, 0.51, 0.68, 0.90, 1.2 and 1.6
To change taps, loosen center screw and move tap link to desired tap. Tap screw and center screw to be tight after tap change is made.

5) R_{1A} tap- 0.07, 0.10, 0.15
To use these taps, Ro must first be set to 0. To change taps, loosen center screw and place link in desired position. Center screw and tap screw to be tight after tap change is made.

When using these taps, R_1 tap must be changed to agree with the R_{1A} tap setting.

INDICATING CONTACTOR SWITCH (ICS)

The only setting required on the ICS is the selection of the 0.2 or 2.0 ampere tap setting. This selection is made by connecting the lead located in front of the tap block to the desired setting by means of the connecting screw.

SETTING CALCULATIONS

The HCB relay has four sets of taps: R_1, T, R_0, and restraint taps. The following discussion establishes limits for the various tap settings under different operating conditions. It should be kept in mind that settings to obtain operation on minimum internal fault conditions are based on the total fault current that flows into the protected line from all terminals.

TERMS

R_1, T, R_0 – Relay taps

I_{3p} – total minimum internal 3-phase secondary fault current fed from all terminals. divided by the number of terminals (2 or 3)

I_L – maximum secondary load current flowing through the protected line.

I_g – total minimum secondary ground fault current fed into the protected line from all terminals, divided by the number of terminals.

$I_{nom.}$(P-P) – nominal internal phase to phase fault sensitivity.

$I_{nom.}$(P-G) – nominal internal line to ground fault sensitivity.

*R_{Nc} (I), R_{Nc} (II) – current transformer ratio at Station I and II respectively.

PHASE FAULT SENSITIVITY

The phase fault pickup is determined by the R_1 and T taps. In order to operate on the minimum line-to-line fault current, the R_1 and T taps should be set for not more than:

$$\frac{T}{R_1} = 5I_{3P} \qquad (7)$$

* In order to prevent operation on load current if the pilot wires become open circuited, the R_1 and T taps should be set for not less than:

$$\frac{T}{R_1} = 10I_L \qquad (8)$$

The available taps are:

* R_1: 0.07, 0.10, and 0.15

T : 4, 5, 6, 8, 10, 12, and 15

Where sufficient fault current is available, it is recommended that the relays be set as follows:

$$\frac{T}{R_1} = 1.25 \times 10I_L = 12.5I_L \qquad (9)$$

The required T/R_1 ratio may be obtained by any combination of T and R_1. However, the T tap must be set the same at all stations. The R_1 taps may be utilized to compensate for different CT ratios with two-terminal lines if the pilot-wire loop resistance is 1000 ohms or less. Auxiliary CT's and identical R_1 tap settings must be used with different main CT ratios on all three-terminal lines and on two-terminal lines with more than 1000 ohms loop resistance in the pilot wire.

GROUND FAULT SENSITIVITY

The ground fault pickup is determined by R_0 and T taps. (T should be determined by the phase setting.) In order to operate on the minimum line-to-ground fault current, the R_0 tap setting should be not less than:

$$R_0 = \frac{0.2T}{I_g} \qquad (10)$$

The available R_0 taps are: 0.39, 0.51, 0.68, 0.90, 1.2, and 1.6.

The R_{1A} taps, 0.07, 0.10, and 0.15, are utilized to set $R_0 = 1/3\ R_1$, where no zero sequence sensitivity is desired. Equation (10) does not apply for these three taps.

For overhead lines, it is recommended that the 1.6 R_0 tap be used to obtain maximum sensitivity.

For cable circuits, where the line charging current exceeds 5% of nominal pickup current, set R_0 for about:

$$R_0 = \frac{T}{7.5}$$

The R_0 taps need not be identical as required with the R_1 taps for three terminal lines and two terminal lines over 1000 ohms pilot wire resistance, where the zero sequence relay currents at the line terminals are not identical for an external fault. However, for a conventional line section the R_0 taps are set in the same proportion as are the R_1 taps.

RESTRAINT TAP

Set in maximum restraint tap for all two-terminal lines. Set in minimum restraint tap for all three-terminal lines. The use of maximum restraint on two terminal applications allows the relay to be used for all pilot wires as indicated in Table I. The use of minimum restraint on three terminal applications compensates for the desensitizing effect of a third terminal.

Note: The relay pick-up calibration must be changed if set in the minimum restraint tap. See "Adjustments and Maintenance."

TAPPED LOADS

Where one transformer bank is tapped to a line protected with two HCB relays, the critical point is to set above the fault current flow for a fault on the other side of the bank. Set the R_1 and T taps for not less than:

$$\frac{T}{R_1} = 5I_{3PL} \qquad (11)$$

where I_{3PL} = total current for a 3-phase fault on the low side of the bank.

Note that the tapped bank must not act as a ground source for high-side faults (e.g. high side connected in delta). Ordinarily this means that the R_0 tap settings need not be changed, since no zero-sequence current flows in the line when the low side is grounded.

SETTING EXAMPLE

CASE I

Assume:

Two-terminal line.

CT ratio =	600/5
Full-load current = I_L =	400A
Minimum 3-phase internal fault current:	
Through Station I =	1500A
Through Station II =	2500A
Minimum internal line-to-ground fault current:	
Through Station I =	400A
Through Station II =	0

Phase fault pickup:

$$*\frac{T}{R_1}\text{(maximum)} = 5I_{3P} = 5 \times \frac{1500 + 2500}{2} \times \frac{5}{600} = 83.3$$

$$\frac{T}{R_1}\text{(maximum)} = 10I_L = 10 \times 400 \times \frac{5}{600} = 33.3$$

The phase fault current is sufficient to allow the relay to be set to prevent tripping on an open-circuited pilot wire. Therefore, set:

$$\frac{T}{R_1} = 12.5I_L = 41.7.$$

Set both relays for: $T = 4$, $R_1 = 0.1$.

The nominal pick-up current from equation 6 for a phase-to-phase fault is:

$$I_{nom}(P\text{-}P) = \frac{T}{2.89R_1} = \frac{4}{0.289} = 13.8 \text{ amperes,}$$

$$\left[I_{nom}(P\text{-}P) = \frac{T}{1.92R_1} \text{ for three-terminal lines}\right]$$

Ground fault pickup:

$$R_0\ \text{(minimum)} = \frac{0.2T}{I_g} = \frac{0.2 \times 4}{400/2} \times \frac{600}{5} = 0.48$$

An R_0 tap exceeding 0.48 will provide tripping. As recommended for overhead lines:

Set $R_0 = 1.6$.

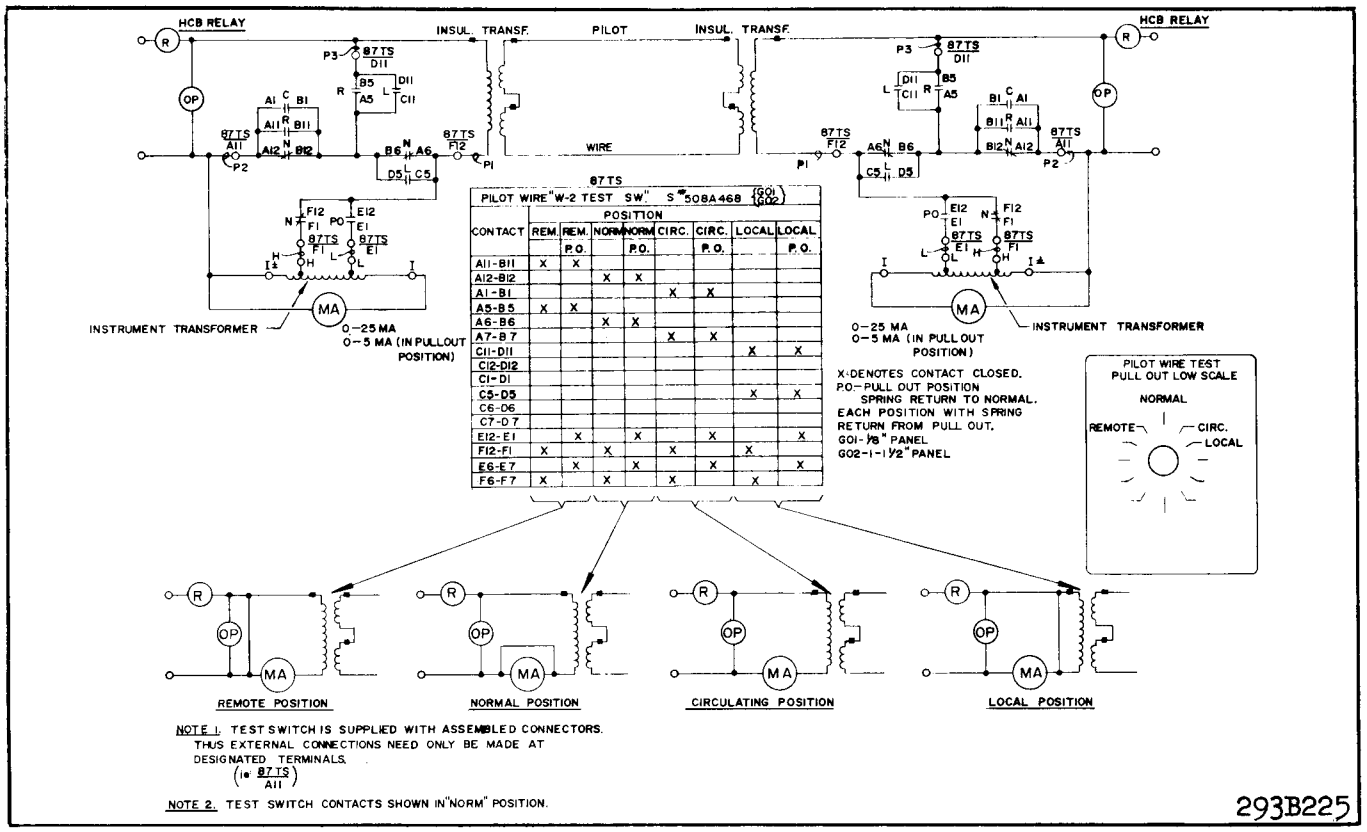

Fig. 9. HCB Relay Test Circuits with S#508A468601-G02 Type W-2 Switch and S#291B318A09 Milliammeter 0- 5-25 ma.

The ground fault nominal pickup is:

$$I_{nom}(P\text{-}G) = \frac{0.4T}{R_0} = \frac{1.6}{1.6} = 1.0 \text{ ampere,}$$

$$\left[I_{nom}(P\text{-}G) = \frac{0.6T}{R_0} = \text{for three-terminal lines}\right]$$

Restraint tap.

Use maximum restraint tap.

CASE II (DIFFERENT CT RATIOS)

Assume 400/5 CT's at Station II and 600/5 CT's at Station I, with less than 1000 ohms pilot wire loop resistance.

At Station I, set $R_0 = 1.6$ as in Case I. However, set $R_1 = 0.15$ to obtain R_1 settings proportional to the CT ratio. From equation 6:

$$T = 12.5R_1I_L = 12.5 \times 0.15 \times 400 = 7.5$$

Set T = 8

Station II settings are:

$$* \; R_1 = 0.15\frac{R_{Nc}(II)}{R_{Nc}(I)} 0.15 \times \frac{400}{600} = 0.10$$

T = 8 (Same as Station I)

$$R_0 = 1.6 \times \frac{400}{600} = 1.07 \text{ (Set 1.2)}$$

INSTALLATION

The relays should be mounted on switchboard panels or their equivalent in a location free from dirt, moisture, excessive vibration, and heat. Mount the relay vertically by means of the four mounting holes on the flange for semi-flush mounting, or by means of the rear mounting stud or studs for projection mounting. Either a mounting stud or the mounting screws may be utilized for grounding the relay. The electrical connections may be made directly to the terminals by means of screws for steel panel mounting or to the terminal studs furnished with the relay for thick panel mounting. The terminals studs may be easily removed or inserted by locking two nuts on the stud and then turning the proper nut with a wrench.

For detailed Flexitest case information, refer to I.L. 41-076.

ADJUSTMENTS AND MAINTENANCE

CAUTION *Make sure that the neon lamp is in place whenever relay operation is being checked.*

ACCEPTANCE TESTS

The following tests are recommended when the relay is received from the factory. If the relay does not perform as specified below, the relay either is not calibrated or it contains a defect.

Main Unit

Connect the relay to the insulating transformer, as shown in Figure 8, and set $R_1 = 0.10$, $R_0 = 1.6$, $T = 4$, and maximum restraint tap. With the insulating transformer terminals H1 and H4 open circuited, measure the minimum pick-up current, I_{79} (min.), with current applied through terminals 7 and 9. This value should be:

$$I_{79} \text{ (min.)} = 6.94 \pm 5\% \text{ amperes.}$$

Now, connect a resistance, R_{PW}, across H1 and H4 of the insulating transformer, with a 10-mfd capacitor connected between H2 and H3. Connect a capacitor, C_{PW}, in parallel with R_{PW}. With R_{PW} and C_{PW} set as specified in Table II suddenly apply $I_{35} = 30$ amperes (through terminals 3 and 5).

TABLE II

Rpw Test - Max. Restraint Tap

$R_1 = 0.10$, $R_0 = 1.6$, $T = 4$

Insulating Transformer Ratio	Rpw † in ohms		Cpw in microfarads
4 to 1	1200	1900	0.75
6 to 1	2700	4300	0.33

† The relay should not operate at the lower value of Rpw, but should operate at the higher value.

Additional tests for the sequence filter and the operating unit are described under "Calibration Check." These latter tests are not required unless the relay fails to meet the acceptance tests.

Indicating Contactor Switch (ICS)

Close the main relay contacts and pass sufficient direct current through the trip circuit to close the contacts of the ICS. This value of current should not be greater than the particular ICS tap setting being used. The indicator target should drop freely.

CALIBRATION CHECK

The following tests are recommended whenever a check on the relay calibration is desired.

Over-all Relay Check

Over-all calibration can be checked by the procedure described under "Acceptance Tests." If the relay has been calibrated in the minimum restraint tap (factory calibration is made in the maximum restraint tap), the R_{PW} test should be made in accordance with Table III instead of Table II.

TABLE III

Rpw Test - Min. Restraint Tap

$R_1 = 0.10$, $R_0 = 1.6$, $T = 4$

Insulating Transformer Ratio	Rpw † in ohms		Cpw in microfarads
4 to 1	800	1400	0.75
6 to 1	1800	3100	0.33

† The relay should not operate at the lower value of Rpw, but should operate at the higher value.

Sequence Filter: Remove tap screw T and connect a high-resistance voltmeter across this open-circuited point by connecting to the tap plate and to one of the saturating transformer taps at the rear of the tap block. Energize the relay with $I_{79} = 6.94$ amperes (terminals 7 and 9). The measured open-circuit voltage, V_F, should be:

$$V_F = 8R_1 \pm 5\% \text{ volts.}$$

$$\text{(e.g., if } R_1 = 0.1,\ V_F = 8 \times 0.1 = 0.8 \text{ volt.)}$$

Repeat this voltage measurement with $I_{59} = 6.94$ amperes.

Operating Unit: The following test will check the polar unit calibration and the performance of the rectifiers. Connect a variable non-inductive resistor across the high-voltage terminals of the insulating transformer (H1 to H4), and connect d-c milliammeters in series with the operating and restraining coils of the polar unit by opening these circuits. (The restraint can be opened at the tap circuit for max. and min. restraint. The operating circuit has to be opened at the polar unit.) These milliammeters should have low resistance and should be capable of reading in the order of 20 to 25 ma in the operating coil and 100 to 150 ma in the restraining circuit. Using $T = 4$, $R_1 = 0.1$, $R_0 = 1.6$, energize the relay with $I_{35} = 10$ amperes (terminals 3 and 5) and increase the variable

resistance across the insulating transformer high-voltage terminals until the relay just trips. The values obtained should conform substantially to the following equations:

For minimum restraint

$$I_o = 0.12\ I_R + 8$$

For maximum restraint

$$I_o = 0.16\ I_R + 8$$

where I_o and I_R are operating and restraining coil coil currents, respectively, in milliamperes. The results are subject to variations between indi-
* vidual relays, due to different exciting impedances of the insulating transformers. However, the value should never be lower than:

For minimum restraint

$$I_o = 0.12\ I_R + 4$$

For maximum restraint

$$I_o = 0.16 I_R + 4$$

CALIBRATION PROCEDURE

If the factory calibration has been disturbed, the following procedure should be followed to recalibrate the relay.

FILTER CALIBRATION

A. R_1 Taps

1. Disconnect T current top link and place Ro place Ro tap in 1.6
2. Connect voltmeter (low-reading, high resistance rectox) across relay terminal 2 and the common of T tap block.
3. Pass 5 amperes a.c. into terminal 7 and out terminal 9 of the relay.
4. Adjust the corresponding R_1 slide wire position (see Fig. 2 for location) to be within limits of following table for each specified setting of R_1 tap screw.

R. Tap Setting	Volts A.C.
.15	0.865 ± .008
.10	0.577 ± .007
.07	0.433 ± .005

B. R_{1A} Taps

1. Disconnect T current top link and set Ro in O tap.
2. Connect a.c. voltmeter across relay terminal 3 and the common connection of R_{1A} and Ro (see Fig. 2 for location).
3. Pass 5 amperes a.c. into terminals 5 and out terminal 3.
4. Adjust the corresponding R_{1A} slide wire position (see fig. 2 for location) to within limits of following table for each specified setting of R_{1A} Tap screw

R_{1A} Tap Setting	Volts A.C.
.15	0.250 ± .005
.10	0.167 ± .003
.07	0.125 = .003

C. Ro Taps

No adjustments can be made on the Ro resistors. Value of resistance can be checked by passing 5 amperes a.c. through terminal 3 and out terminal 9. T tap must be disconnected. Following voltages should be measured across terminal 2 and the specified tap of Ro.

Ro Tap Setting	Volts A.C.
.39	1.85 ± 2.05
.51	2.45 ± 2.68
.68	3.28 ± 3.60
.90	4.33 ± 4.70
1.20	5.78 ± 6.27
1.60	7.72 ± 8.38

Polar Unit Contact Adjustment: Adjust the right hand stationary stop screw until the large armature rivet clears the right hand pole face by a few thousandths of an inch. Next adjust the left hand stationary contact so that there is approximately .025 of an inch between it and the moving contact.

Polar Unit Calibration: Connect the restraint tap link in the position in which it will be used. Connect terminals X1 and X2 of the insulating transformer across the pilot-wire terminals of the relay. Connect the relay taps on T = 4, R_1 = 0.1, R_o = 1.6.

The sensitivity of the polar unit is adjusted by

means of two magnetic, screw type shunts at the rear of the element. Looking at the relay front view, turning out the right hand shunt decreases the amount of current required to close to the right hand stop. *Conversely, drawing out the left hand shunt decreases the amount required to trip the relay. In general, the farther out the shunt screws are turned, the greater the toggle action will be and as a result, the dropout current will be lower. In adjusting the polar elements, be sure that a definite toggle action is obtained, rather than a gradual movement of the armature.

Start with both shunt out 4 to 5 turns. Short out the pilot wire on the high side of the insulating transformer. Momentarily apply 40 amperes from ter- *minals 5 to 3. Now remove the short from H1 to H4 and, adjust the right hand shunt such that the contacts close with a positive snappy toggle action at I_{79} = 6.9 to 7.0 amperes. After this adjustment is complete, short out pilot wire and apply 40 amperes *momentarily from terminals 5 to 3. Now remove the short from H1 to H4 and, check pickup for I_{79}. If value has changed from before, it will be necessary to re-adjust the right hand shunt. Several trials may be necessary before the pickup will be constant. In each case, the 40 amperes should be applied before any additional adjustments are performed on the shunt.

After the shunts have been adjusted, apply 40 amperes momentarily to terminals 3 and 5 of the relay with the pilot wire open. Pickup will be approximately 5 amperes with current applied to terminals 7 and 9. This change in pickup is due to a change in the residual magnetism in the polar unit of the relay. In the de-energized state, the permanent magnet of this unit produces a flux or magnetic bias to keep the contacts open. When the unit is energized, a second flux (electrical) is produced which either adds to or substracts from the magnetic flux. When the electrical flux is removed, the magnetic structure of the polar unit is changed. Hence, the flux produced by an excess of restraint current, adds to the magnetic bias, and the flux produced by an excess of operating current substracts from the magnetic bias. This characteristic is inherent in the polar unit and has no affect on the overall performance of the relay.

After the shunt adjustment has been made, change the input current connections to terminals 3 and 5. The relay should trip for I_{35} = 0.45 to 0.55 amperes. For relays with double contacts make sure that both upper and lower contacts meet at the same values of pick up current.

ROUTINE MAINTENANCE

Contacts: All contacts should be cleaned periodically. A contact burnisher, S#182A836H01, is recommended for this purpose. The use of abrasive material for cleaning is not recommended, because of the danger of embedding small particles in the face of the soft silver and thus impairing the contact.

ICS Unit: Close the main relay contacts and pass sufficient direct current through the trip circuit to close the contacts of the ICS. This value of current should not be greater than the particular ICS tap setting being used. The indicator target should drop freely.

Operating Unit: Check the relay minimum pickup, with the pilot wires disconnected from terminals H1 and H4 of the insulating transformer, by energizing with I_{79} current (terminals 7 and 9). Pick-up current should be:

$$* \; I_{79}\,(\text{min}) = \frac{T}{5.77\ R_1} \pm 5\% \text{ amperes}$$

Additional tests are recommended with the pilot wire connected as described under "Complete System Test."

COMPLETE SYSTEM TEST

At the time of the initial installation and at subsequent maintenance periods, it is recommended that the following relay system checks be made, with the pilot wire connected.

MINIMUM PICKUP

PRECAUTION: In making this test with the relay in place on the switchboard, it is necessary to connect the load box in the circuit between the relay and the "hot" side of the supply circuit. If this precaution is not observed, it is possible to cause a short circuit between the grounded station service supply circuit and the ground of the current transformer circuit.

The minimum pickup of each relay should be checked before starting the system tests. With taps as specified in Fig. 10, and the pilot wire circuit open on the high side of the insulating transformer, each relay should trip with I_{AN} = 0.45 to 0.55 amp. *or with I_{BC} = 6.9 to 7.0 amperes

With the pilot wire connected, energize one relay with I_{AN} and determine the minimum pick-up of all relays. Repeat this test by energizing the other relay or relays. Record these values for future reference. If the neon lamp is lit during these tests, the pilot circuit is presenting too high a shunting effect on the relays.

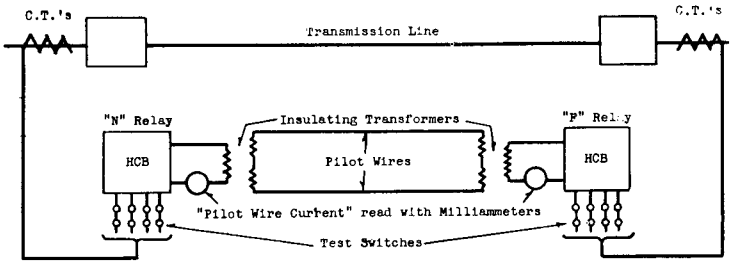

Note: The line should be carrying through load current amounting to at least 1.5 amperes as measured in the secondary of the Current Transformers. This test is based on the ratio of the C.T.'s being the same at each end of the line, in which case set the taps of both relays to $R_1 = .1$; $R_0 = 1.6$; $T = 4$ for this test.

	RELAY "N"					RELAY "F"				
Test No.	Test Switch	Relay Current	Relay Trip	"Pilot Wire Current" Circulating	"Pilot Wire Current" Remote	Test Switch	Relay Current	Relay Trip	"Pilot Wire Current" Circulating	"Pilot Wire Current" Remote
1		A,B,C,N	No	(1)	(1)		A,B,C,N	No	(1)	(1)
2		A,C,B,N	No	(2)	(2)		A,C,B,N	No	(2)	(2)
3		A,N	Yes	(3)	(Ω)		O	Yes	(3)	(3) (4)
4		O	Yes	(3)	(3) (4)		A,N	Yes	(3)	None
5		A,N	No	(3)	(3)		A,N	No	(3)	(3)
6		A,N	Yes	(6)			B,C,N	Yes	(6)	

REMARKS

* Tests 1 and 2 are to check normal positive sequence rotation of phases.
Tests 3 and 4 simulate internal Phase A to Ground fault with single end feed.
Test 5 simulates an external Phase A to Ground fault. (5)

* Test 6 simulates an internal Phase A to Ground fault, with equal feed from the two ends, since $I_B + I_C = - I_A$, with balanced load.

LEGEND OF TEST SWITCH SYMBOLS:

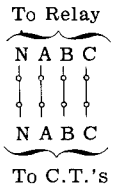

Normal Connection. All Currents to Relay.

EXAMPLE

Phase A current from C. T.'s to Relay. Phase B and C. T.'s shorted to neutral.

(1) The "pilot wire current" will vary depending upon the magnitude of the through load current and the characteristics of the pilot wire. See Figures 11 and 12.
(2) Since the relay is temporarily connected for negative sequence, it should have practically zero output in this test.
(3) These readings may be "off scale" depending upon the magnitude of the load current.
(4) The relay at this station should reset when the "far" current is being read because the local relay will be receiving no current from either the pilot wire or the current transformers.
(5) Test 4 and 5 can be repeated using phase B to neutral current, and again with phase C to neutral current, but this is not strictly necessary on the basis that, having proved the phase sequence with tests 1 and 2, and having proved the correspondence of phase A at the two ends of the line with test 5, then phases B and C must be correct.
(6) Some pilot wire current will be read, depending upon the magnitude of the distributed capacity of the pilot wire in combination with the magnetizing impedance of the insulating transformer.

** Fig. 10. HCB Relay System Testing Procedure.*

INTERPRETATION OF TESTS

* 1. Tests #1 and #2, Figure 10, are designed to indicate that the relays have been wired with the correct phase rotation. When the phase rotation is deliberately and temporarily changed by test #2, then the pilot-wire currents should be substantially zero. Any small value of pilot wire current which appears may be due to either a small unbalance in the load current, or else due to harmonic currents flowing through the line. If either relay has inadvertently been connected for the wrong phase rotation, then the fact will be apparent when reading local current. Local current should be interpreted from Figure 13, with the amount of load current which is present. If no current is read on test #1 for the local relay, and if current for test #2 is in line with Figure 13, then it is an indication that that particular relay has been connected for the wrong phase rotation.

a. In the event the pilot wire is open-circuited, the apparent circulating current will be quite low, being limited to the magnetizing current of the insulating transformer. Also, it will not be possible to read current from the remote end.

b. If the pilot wire is short-circuited, then the circulating current will be near normal, but it will not be possible to read current from the remote end.

2. If the pilot wire is reversed, (a) the circulating current will be low on test #1, but it will be possible to read pilot-wire current from the remote relay. (b) Both relays will trip on test #5. If the monitoring relays also suffer from this error in connection, then the error should be corrected at one relay location by reversing the connections to the H_1-H_4 terminals of the insulating transformer. However, if the monitoring relays do not suffer from this error, then the polarity of the pilot wires insofar as the HCB relay installation is concerned may be suitably corrected by making a reversal of connections either at the X_1-X_2 terminals of one insulating transformer, or at the output terminals of the relay, #18 and #19, Figure 3.

3. If the phases are rolled at one end of the line, then this will be picked up by test #5. On test #5, neither relay should trip when phase-A-to-neutral current is delivered to each of the two relays with the switching arrangement as shown and discussed. However, if one or both relays trip, then try checking the near relay, phase-A-to-neutral current, against phase-B-to-neutral current at the far relay. Also, check phase-A-to-neutral current at the near relay against phase-C-to-neutral current at the far relay. If, for example, neither relay trips when phase-A-to-neutral current is used for the near relay and phase-B-to-neutral current is used at the far relay, then it is an indication that what had been thought to be phase B current at the far location really identifies with phase A current at the near location. This identifies a rolled-phase condition, and also indicates the correction which must be made in the connections of the current transformer input to the relay.

4. One combination of errors which is somewhat tricky to pick up is the combination of pilot wires reversed plus a rolled-phase condition at one end. Let it be assumed that the pilot wire is reversed at the far end, making an error of 180 degrees. Then let it be assumed that the phases are also rolled by 120 degrees, thereby adding another error of 120 degrees. Adding these two together brings the total up to 300 degrees, which is within 60 degrees of what would be normal. Because of this, the only symptom which will appear in the first four tests is that the circulating current is likely to be lower than one would expect when read at one end or the other on test #1. However, test #5 may be used to identify this combination of errors. When the condition exists as described, when test #5 is extended to check phase A current at the near end against each of the three currents at the far end in turn, it will be found that at least one of the two relays will always trip. If this condition is found, reverse the pilot-wire connection, check out the rolled-phase condition and correct it, and then proceed with all six tests.

5. Test #6 is a final verification test. **Fig. 10*

LOADED CIRCUIT TEST

In performing these tests, the following procedure should be used.

1. Standard testing equipment is recommended for permanent installation with the relays as shown in Fig. 9. If this equipment is not available, a similar portable test should be set up using a
   * low-resistance-a-c milliammeter.
* 2. Red-handle flexitest case switch should be open to interrupt the breaker trip circuit.
3. A test crew is necessary at each substation with a means of communication between them.
4. When the test calls for delivering only specified currents to the relay, it is necessary to use a thin piece of insulating material in the ammeter test jack. For example, test #5 of Fig. 10 relay "N". To apply phase A to N current to the near relay only, the switches associated with termi-
   * nals 6, 7, 8, 9 of figure 3 must be open. Opening switches 6 and 8 short circuits the current transformers for phases B and C. However, it is also necessary to insert the insulating material in the ammeter test jacks associated with terminals 7 and 9 in order to break up the connection between the filter in the relay chassis and the grounded input circuits from current transformers in phases B and C.
5. To facilitate making test #2 of Fig. 10, two ammeter test plugs wired together with a foot or two of flexible wire should be used. With these two test plugs suitably wired together, one of them may be shoved in the ammeter test jack associ-
   * ated with terminal 7, Figure 3, and the other shoved in the ammeter test jack associated with terminal 9, Figure 3. (This should not be done until the switches for terminals 6 and 8 have been open, thus short circuiting the current transformers involved). It is desirable to wire the test plugs together such that when one is shoved in the one ammeter test jack with the red side up, and the other is shoved in the other ammeter test jack with the black side up, it is then known that the B and C phase currents to the relay have been reversed at the input to the chassis in line with test #2, Fig. 10. After these test plugs are properly inserted, it is then appropriate to close the switches associated with terminals 6 and 8, Fig. 3, in order to remove the short circuit from the current transformer secondaries.

Perform the tests as indicated in Figure 10 recording the milliammeter readings and the relay input current at the same instant, for future reference. The headings "Circulating" and "Remote" in the table of Figure 10 refer to the test switch positions, "CIRC" and "REM." For tests 3 to 6 of Figure 10, the input current should be increased to about 1.5 amperes by an auxiliary current transformer, if the secondary load current is below this value. Also record the input and output readings with the test switch in the "Local" position. Typical values for the "Local" position readings are shown in Figure 13.

THREE TERMINAL LINES

A similar procedure to Figure 10 should be followed for three-terminal line applications. In this case open the line circuit breaker at one terminal, and disconnect the loads from the pilot wire terminals of the HCB relay at that terminal. This leaves the remaining portion of the line operating as a two terminal line. Now perform the normal tests as outlined for the two terminal line system test. When these tests have been satisfactorily completed, return the third terminal relay to normal and close the breaker at that station. Repeat the above procedure with a different breaker open and relay disconnected. This will complete the check of the three terminal line.

ENERGY REQUIREMENTS

The volt-ampere burden of the type HCB relay is practically independent of the pilot-wire resistance and of the current tap used. The following burdens were measured at a balanced three-phase current of 5 amperes:

For tap 4, $R_1 = 0.075$ and $R_0 = 0.39$

Phase A	1.25 volt-amperes	0°
Phase B	0.30 volt-amperes	285°
Phase C	0.90 volt-amperes	45°

For tap 4, $R_1 = 0.15$ and $R_0 = 1.6$

Phase A	2.3 volt-amperes	120°
Phase B	4.6 volt-amperes	285°
Phase C	5.3 volt-amperes	45°

The angles above are the degrees by which the current lags its respective voltage.

The continuous rating of the relay is 10 amperes.

The two-second overload ratings of the relay are 150 amperes phase and 125 amperes ground currents.

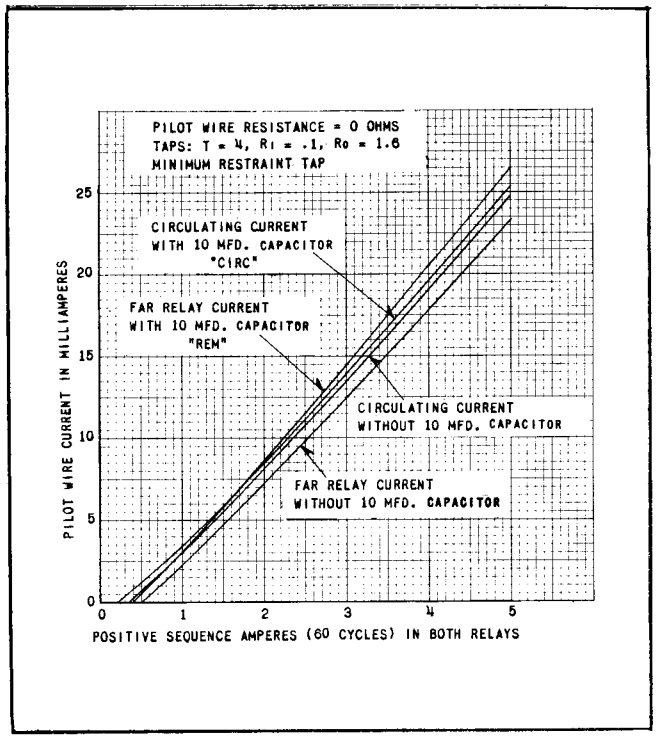

Fig. 11. Typical Test Output vs. Input Relay Current in a Two-Terminal Line with Zero Pilot-Wire Resistance.

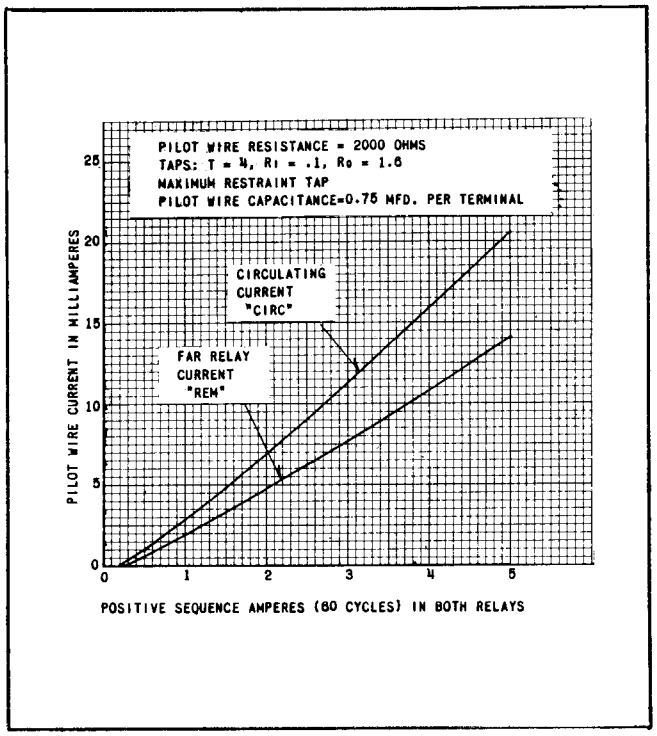

Fig. 12. Typical Test Output vs. Relay Current in a Two-Terminal Line with 2000-Ohm Pilot-Wire Resistance With or Without 10-mfd Capacitor.

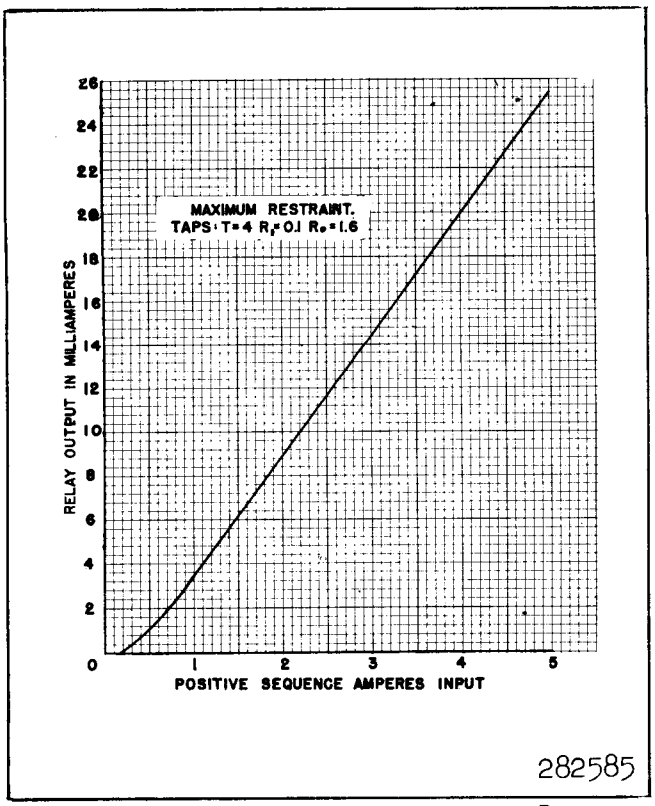

Fig. 13. Typical Curve of Relay Output vs. Positive-Sequence Input - Test Switch in Local Position.

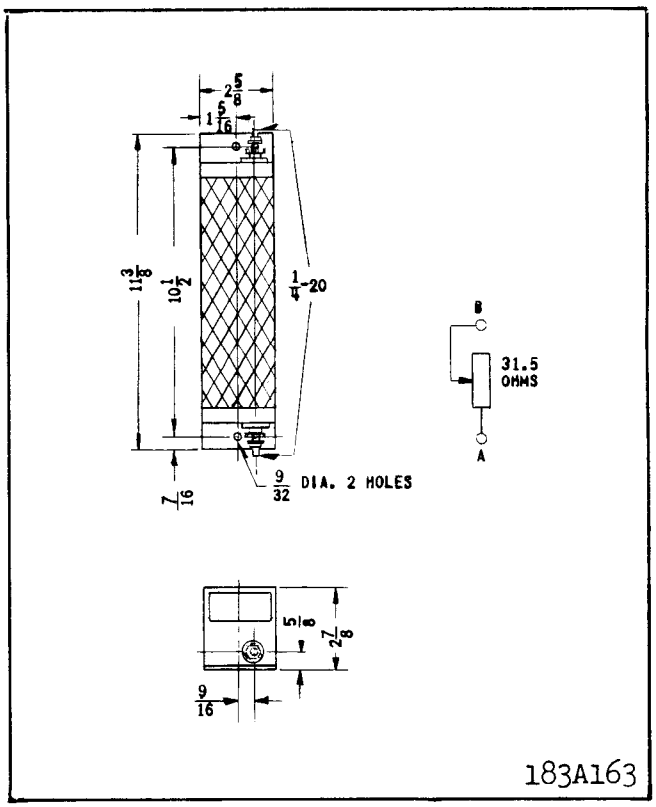

Fig. 14. Outline and Drilling Plan of S#1209991 Balancing Resistor for Three-Terminal Line Applications.

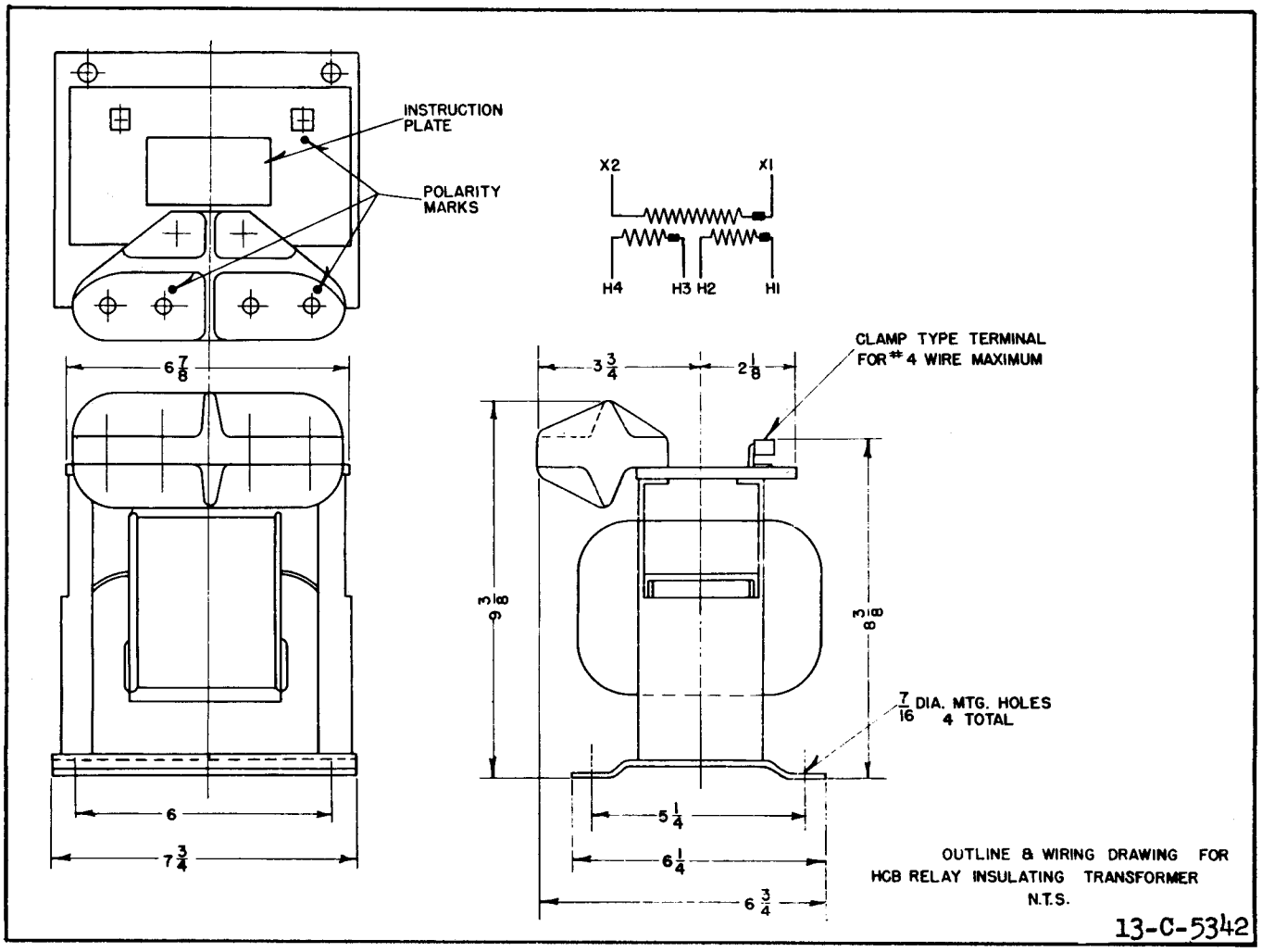

Fig. 15. Outline and Drilling Plan of HCB Relay Insulating Transformer.

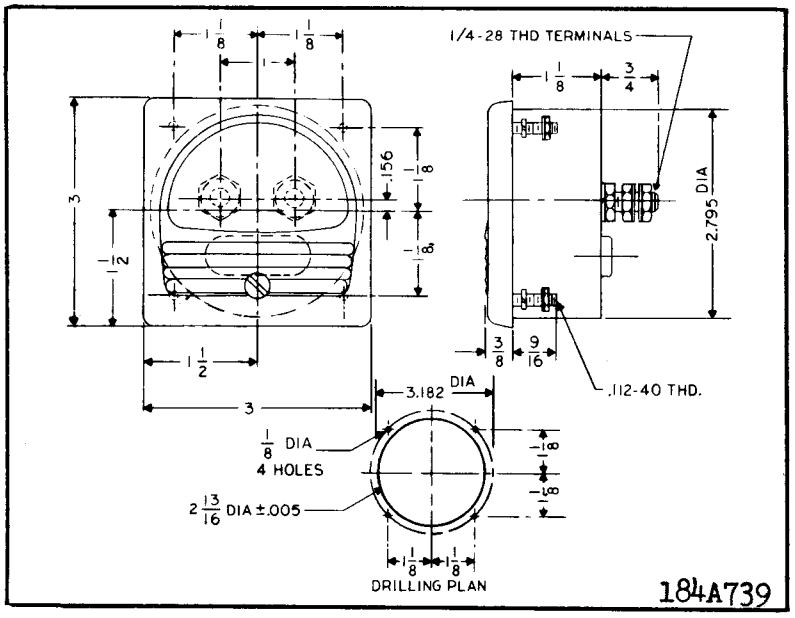

Fig. 16. Outline and Drilling Plan of the Semi-Flush-Type Test Milliammeter.

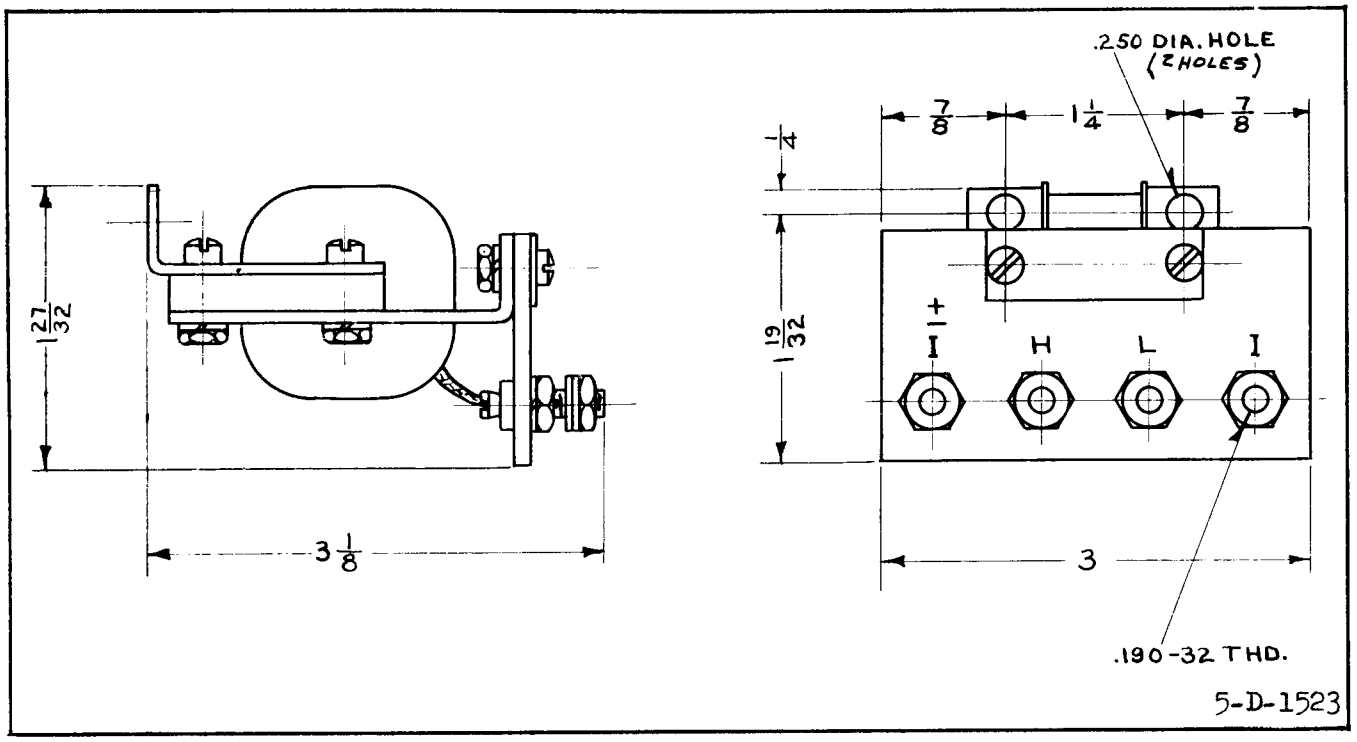

Fig. 17. Outline of the Test Milliammeter Auxiliary Transformer.

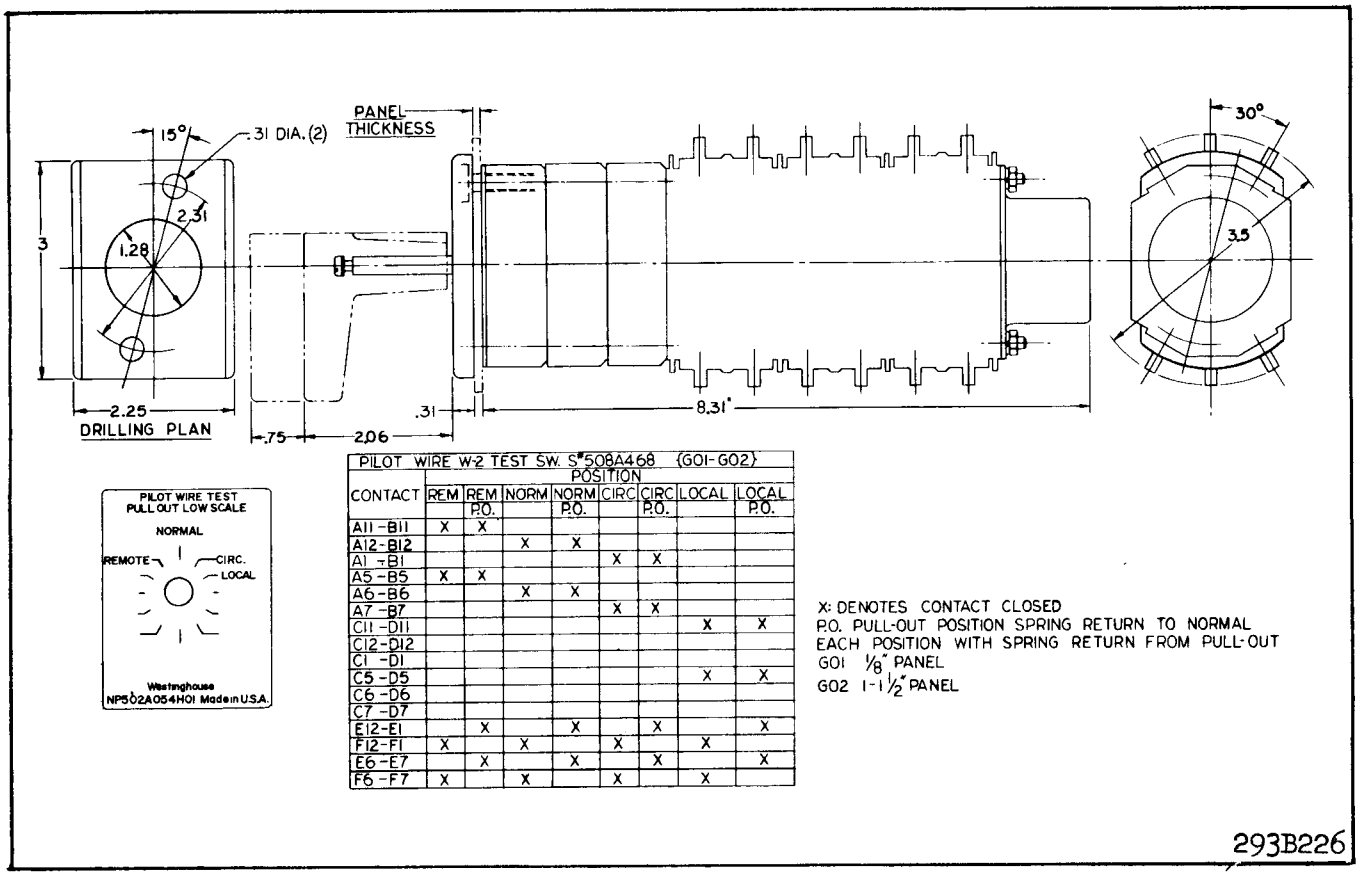

PILOT WIRE W-2 TEST SW. S#508A468 (G01-G02)

CONTACT	POSITION REM	REM P.O.	NORM	NORM P.O.	CIRC	CIRC P.O.	LOCAL	LOCAL P.O.
A11-B11	X	X						
A12-B12			X	X				
A1 -B1					X	X		
A5 -B5	X	X						
A6-B6			X	X				
A7 -B7					X	X		
C11-D11							X	X
C12-D12								
C1 -D1								
C5-D5							X	X
C6-D6								
C7 -D7								
E12-E1		X		X		X		X
F12-F1	X		X		X		X	
E6-E7		X		X		X		X
F6-F7	X		X		X		X	

Fig. 18. Outline and Drilling Plan of the Type W-2 Test Switch.

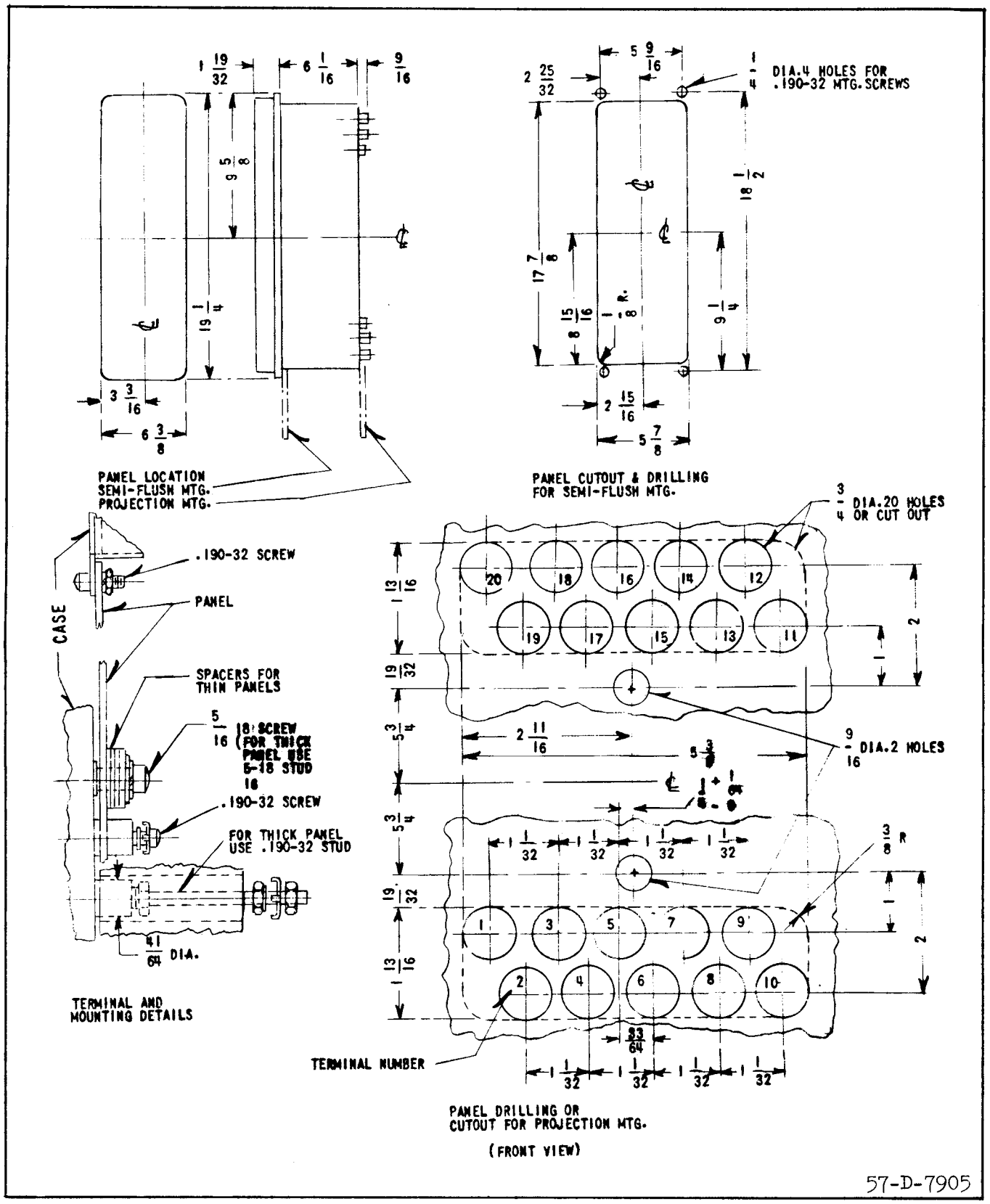

Fig. 19. Outline and Drilling Plan for the Type HCB Relay in the Type FT-42 Case.

PILOT-WIRE ENERGY

The current and voltage impressed on the pilot wire do not exceed 100 milliamperes and 60 volts. The wave form and magnitude of the pilot-wire current are such that telephone interference is within the limits allowed by the Bell Telephone Company. This permits the use of leased telephone lines as a pilot-wire channel.

RENEWAL PARTS

Repair work can be done most satisfactorily at the factory. However, interchangeable parts can be furnished to users who are equipped for doing repair work. When ordering parts, always give the complete nameplate data.

APPROXIMATE RESISTANCE VALUES OF COMPONENTS IN HCB RELAY

Transformer	Secondary Winding		Start to Tap 20 to 30 ohms
			Start to Finish 110 to 140 ohms
Polar Unit	Operating Coil		290 - 320 ohms
Polar Unit	Restraining Coil	Maximum	12 - 16 ohms
		Minimum	9 - 12 ohms
Resistor	Rc		41 - 44 ohms
Tube Resistor	Ro		As Marked on Ro Tap Plate
Looped Resistor	R1		As Marked on R1 Tap Plate
	R1A		As Marked on R1A Tap Plate
Rectifiers			IN91 Germanium Diodes
Indicating Contactor Switch			0.2 amp. Tap 6.5 ohms
			2.0 amp. Tap 0.15 ohms

WESTINGHOUSE ELECTRIC CORPORATION

RELAY-INSTRUMENT DIVISION **NEWARK, N. J.**

Printed in U.S.A.

INSTALLATION • OPERATION • MAINTENANCE

INSTRUCTIONS

PILOT WIRE INSULATION AND PROTECTION FOR HCB AND HCB-1 RELAYING

APPLICATION

The insulation and protection equipment shown in Fig. 1. is used with the HCB or HCB-1 pilot wire relay. A complete installation for one terminal of a line consists of an insulating transformer, neutralizing reactor, capacitors, mutual drainage reactors and neutralizing reactor KX642 tube.

AC Bypass Capacitor (C)

The AC bypass capacitor (C) is required only when DC monitoring and/or remote trip relays are used. Otherwise connect H2 to H3 on the insulating transformer (refer to Fig. 1.). Use a 10 ufd capacitor
* for 50/60 HZ applications.

Exciting Capacitors (Cg)

The exciting capacitors (Cg) and ground connection are omitted when the neutralizing reactor is not used. Use a 1.0 ufd capacitor for 50/60 HZ applica-
* tions.

For an application using dc monitoring remote-trip relays without the insulating transformer for HCB/HCB.1 relaying, capacitor C should be connected across the wires to minimize the metallic voltage (wire-wire voltage) generated by the un-unbalanced impedance of capacitors C_g.

Mutual Drainage Reactor

The mutual drainage reactor is applied to drain off longitudinally induced voltages which may occur by lightning surges (not a direct stroke) or the parallel association of the pilot wire with faulted power circuits.

The mutual drainage reactors must be applied at more than one terminal or location to provide a path for the drainage currents to flow.

With the mutual drainage reactor only (hence no rise-in-station ground hazard), the remote and station ground are essentially equal, and the KX642 tube ground should be connected to the station ground.

By forcing equal current flow from the two wires into ground, the reactor minimizes metallic voltage (wire-to-wire voltage). The reactor cannot, however, eliminate all metallic voltage even though the longitudinally induced voltages (common mode) are equal and the currents are equal on the two wires unless the wire resistances are identical.

Since it is not practical to make the wire resistances equal, there is a limit to the amount of induced voltage which can be handled without introducing the possibility of relay misoperation due to the generation of spurious metallic voltage. Therefore, it is recommended that these reactors not be applied for cases where the induced voltage from the power system could exceed 1500 volts, rms. Where the induced voltage could exceed 1500 volts, use a cable with sufficient insulation to withstand the induced voltage stress or improve the shielding to reduce this voltage.

Neutralizing Reactors

The neutralizing reactors are applied where the difference between station ground and remote ground can exceed 600 volts rms during power system faults. This rise in station ground potential appears across the neutralizing transformer inserted in the pilot wire. Thus all equipment and circuitry to the left of the neutralizing reactor terminals H2 and H4 (Fig. 1.) are essentially at station ground. All equipment, circuits, pilot wire, sheath, etc. to the right of H1 and H3 (Fig. 1.) are at remote ground and must be insulated from station ground and operating personnel in the station area. The shunt capacity to ground of the pilot wire pair should be on the order of 1 ufd or more. If not, capacitance (Cs) should be added as shown to provide equivalent of approx. 1 ufd. total on each wire to ground.

SUPERSEDES I.L. 41-971.4E
*Denotes change from superseded issue.

EFFECTIVE AUGUST 1971

TECHNICAL DATA

Insulating Transformer

Style	Rating	Frequency	Schematic	Reference	Outline Reference
1575394	4/1	50-60 HZ	20D1472	Fig.2	Fig.3(a)
1629502	6/1	50-60 HZ	16D9583	Fig.2	Fig.3(a)

*

General Specifications	Units	4/1	6/1	4/1	6/1
		60 HZ		50 HZ	
Rated Voltage H1-H2 and H3-H4	Volts	60	90	60	90
Rated Voltage X1-X2	Volts	30	30	30	30
Continuous Rating H Windings	MA.	12	8	12	8
Resistance of each H Winding	Ohms	20.4	46.5	20.4	46.5
Continuous Rating X Winding	MA.	48	48	48	48
Resistance of X WINDING	Ohms	1.7	1.7	1.7	1.7
Exciting Impedance X_1-X_2 at 30 V.	Ohms	850-1250	850-1250	850-1250	790-1030
Approx. Weight	Lbs.	25	25	25	25

KX-642 Gas Tube

A.C. rms voltage breakdown	300 - 500 Volts
Tube Voltage drop, average D.C.	20 - 30 Volts
1 Second current rating	90 Amps
2 Second current rating	40 Amps

Neutralizing Reactor

Style	Freq.	With KX642 Tube & Socket	Schematic	Reference	Outline Reference
815A629G03	60	Yes	6D1260	Fig.2	Fig.4 (b)
815A629G01	60	No	6D1260	Fig.2	Fig.4 (b)
815A629G03	50	Yes	6D1260	Fig.2	Fig.4 (b)

Auxiliaries

949122 1 mfd exciting capacitor - 2 required Res. 50-60 HZ Neutralizing Reactor

The neutralizing reactor and mutual drainage reactor may be used together as shown or either may be applied separately depending on the hazards encountered.

The neutralizing reactor may be applied at one terminal only if there is no rise in voltage at the other terminals.

Neutralizing Reactor Tube KX642

The neutralizing reactor tube KX642 is recommended to minimize wire to wire voltage during a disturbance with one wire accidentally grounded.

Shield Grounding

In order to be electromagnetically effective the shield must be grounded at least twice to provide a path for the flow of demagnetizing current—the question, though, is where? Should the shield be grounded or insulated from the station mat?

* Neutralizing Reactor, Cont.

General Specifications	Units	60 HZ	50 HZ
Voltage Rating Between Windings	Volts	500	500
Voltage Rating Across Winding in Parallel	Volts	4000	4000
Exciting Impedance-both Windings in Parallel at 4KV	Ohms	134,000-267,000	56,750-113,500
Leakage Reactance Each Winding	Ohms	65	54
Resistance of Each Winding	Ohms	88	88
Total Impedance One Reactor Adds to the Pilot Wire Loop	Ohms	219	207
Test Voltage Windings to Ground	Volts	10,000	10,000
Continuous Current Rating Each Winding	MA	10	10
One Second Current Rating Each Winding	MA	50	50
Approx. Weight	Lbs.	76	76

Insulation	Units	4/1	6/1	4/1	6/1
		60 HZ		50 HZ	
H to L	KV	12	12	12	12
H to GND	KV	12	12	12	12
L to GND	KV	4	4	4	4

Mutual Drainage Reactors

Style	Freq.	Inc. Socket for Tube	Inc. KX642 Tube	Schematic	Reference	Outline Refer-
881A868G03	60/50	Yes	Yes	253A180	Fig.2	Fig.5 (a)
881A868G02	60/50	Yes	No	247A775	Fig.2	Fig.5 (a)

General Specifications	Units	60 HZ	50 HZ
Test Voltage Between Windings and Between Windings and Ground-for 1 Minute	Volts	4000	4000
Excitation Impedance at 120 Volts from H1 to H4 H2 to H3 connected together	Ohms	24,000-48,000	17,000-33,000
D.C. Resistance— Each Winding	Ohms	8.	8.
Leakage Reactance Each Winding	Ohms	1.5	1.2
One Second Rating— Each Winding	Amps	90	90
Two Second Rating — Each Winding	Amps	22	22
Approx. Weight	Lbs.	40	40
Saturation Point H1 & H3, to (Winding in Parallel)	Volts, Rms.	500	400

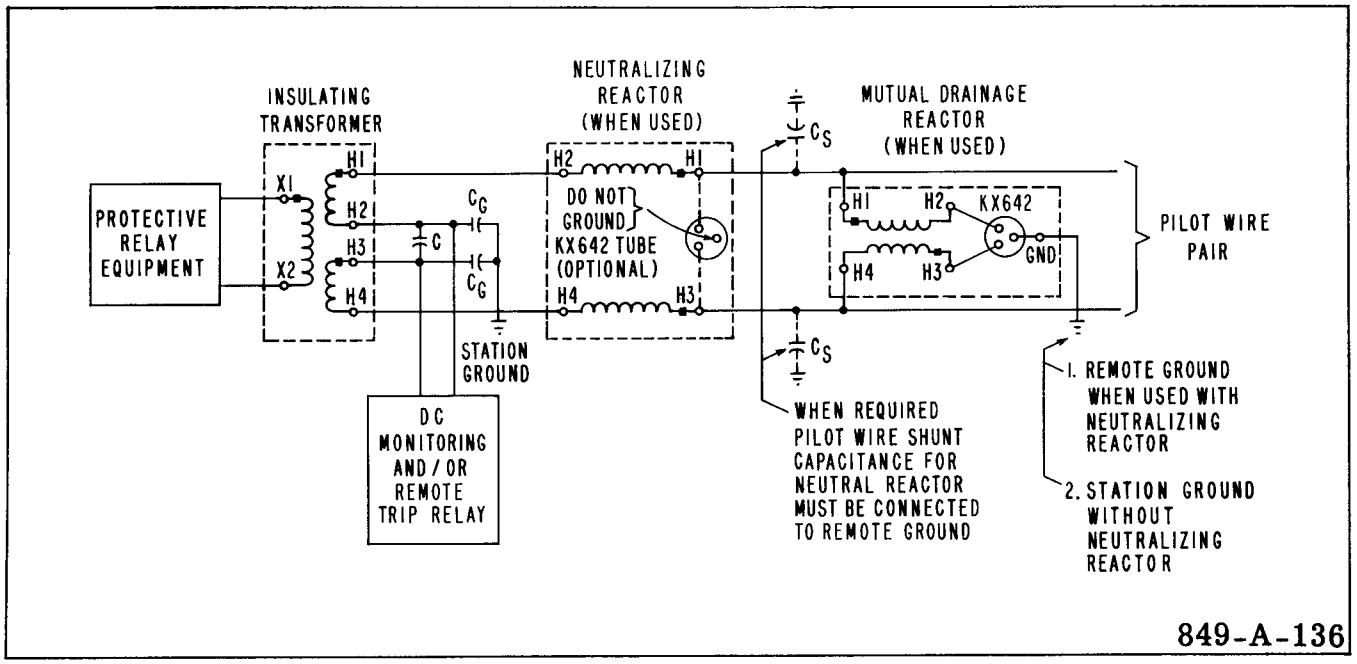

Fig. 1. External Schematic for Pilot Wire and Protective Equipment for HCB and HCB-1 Relaying.

If the shield is grounded to the power-station mat the shield may be damaged by current generated by a rise in station-ground potential during a power-system fault. Unless, the shield has sufficient conductivity to withstand the thermal stress, it should be insulated from station ground. Note that an increase in shield conductivity does not cause a proportional increase in shield current due to the inductance in the loop. If the shield is insulated from station ground (i.e., within 500 ft. of station) it is not effective in reducing induced voltage in the insulated section; if this voltage is large a high-conductivity shield which can thermally withstand the stress of a mat ground is indicated. The "insulated shield" section must be remote grounded to minimize electric-field pickup.

Where the two stations are within about 1500 ft. or less of each other either a single shield ground should be used or the shield should be tied to both mats. In such an application it is common to interconnect the two mats via large power cables (in addition to the overhead shield wires); these reduce the 60 Hz mat voltage difference. However, they have a limited effectiveness due to the cable inductance.

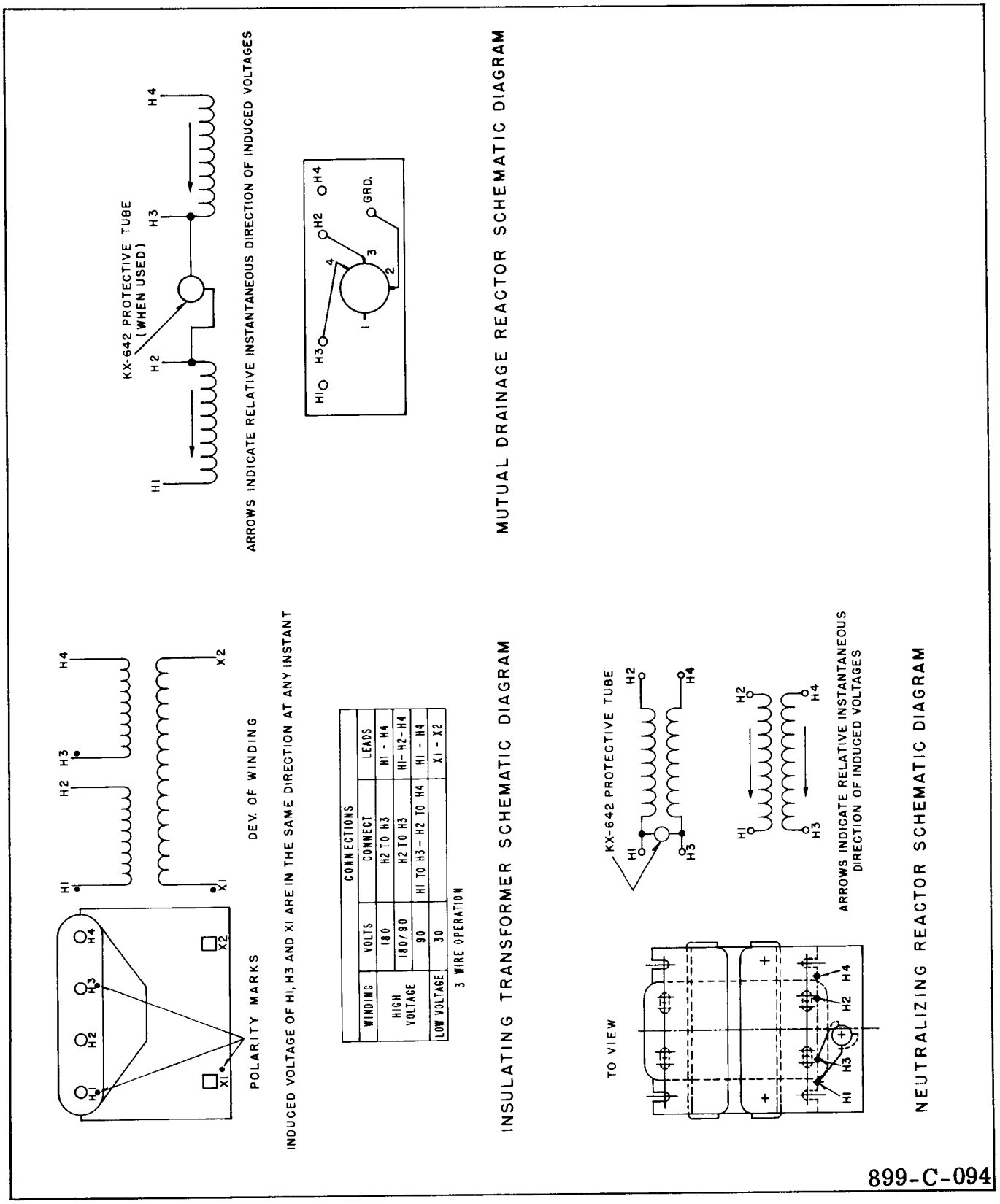

Fig. 2. Schematic Diagrams of Protective Equipment for HCB and HCB-1 Relaying.

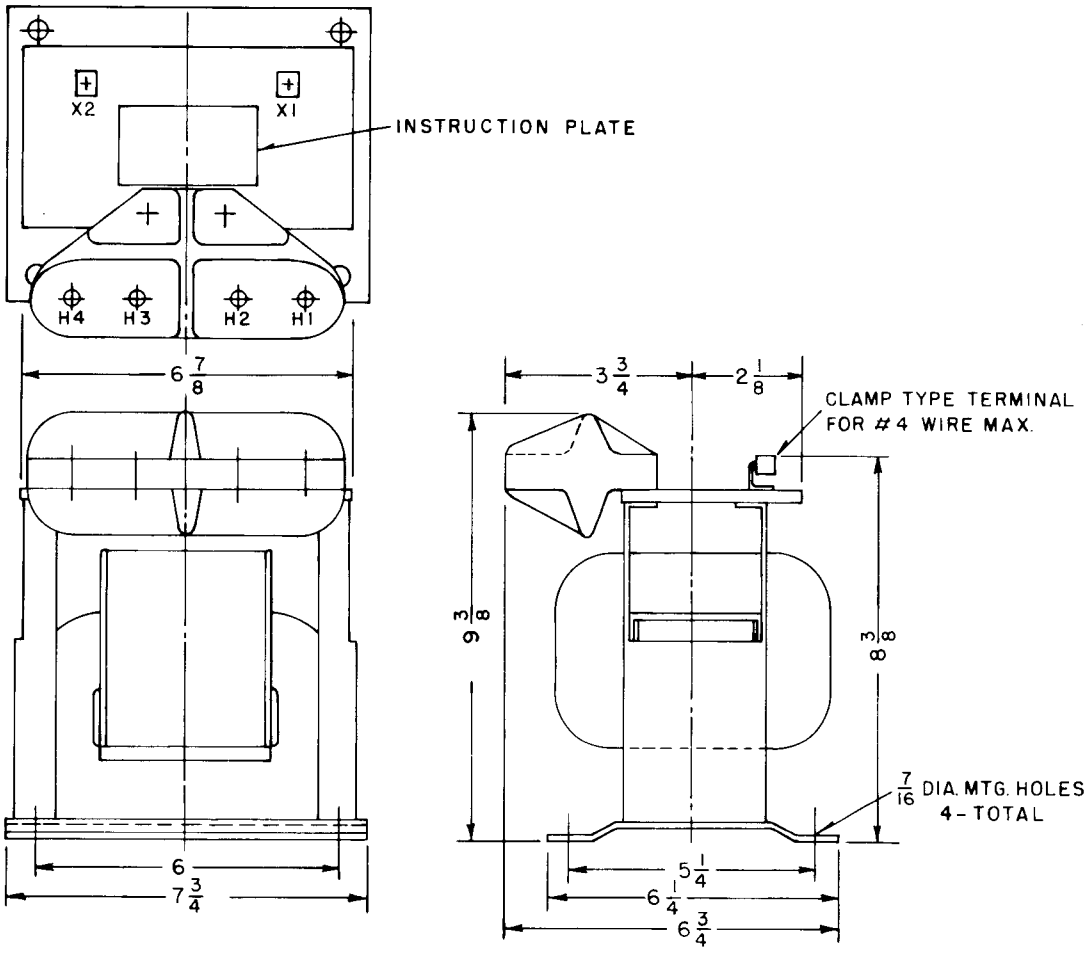

INSULATING TRANSFORMER OUTLINE FOR 50 AND 60 CYCLE OPERATION

899-C-095

* *Fig. 3. Insulating Transformer Outlines for Protection Equipment for HCB and HCB-1 Relaying.*

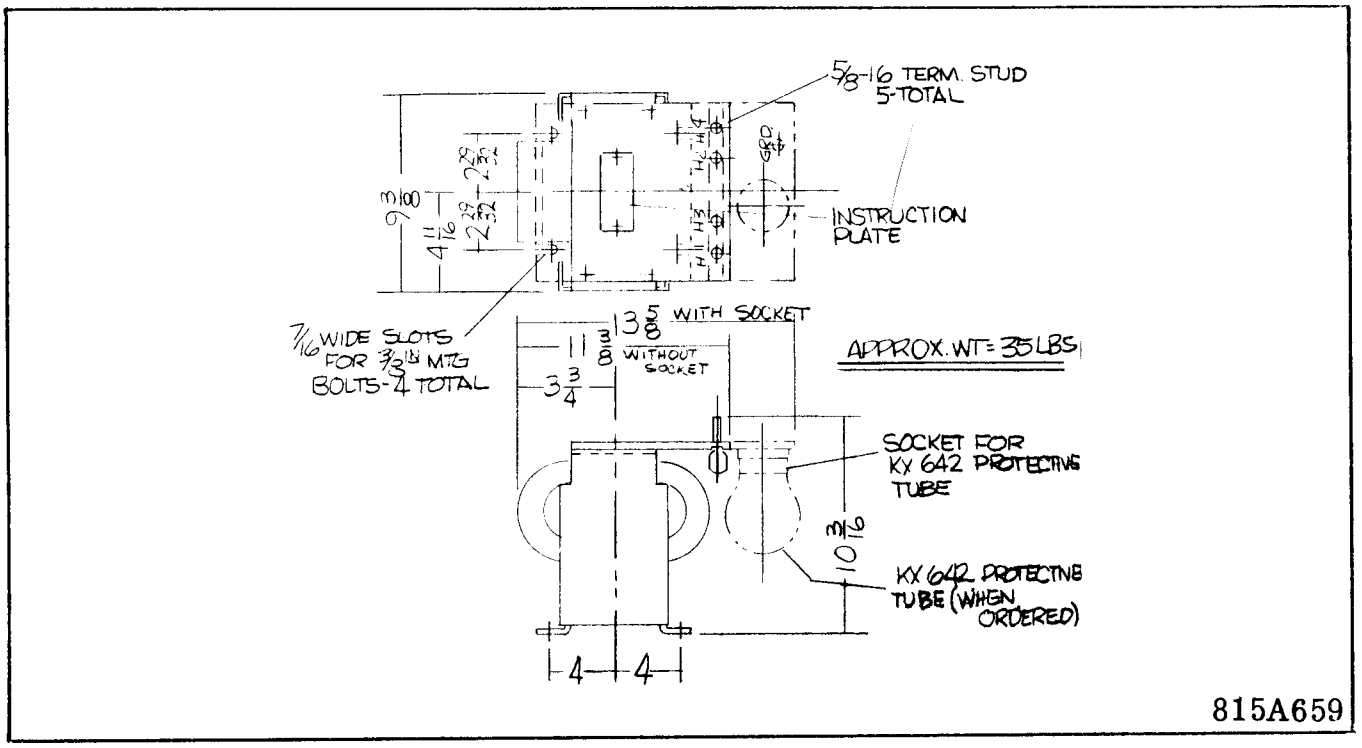

Fig. 4. Neutralizing Reactor outlines 50 and 60 HZ Operation, for Protective Equipment for HCB and HCB-1 Relaying.

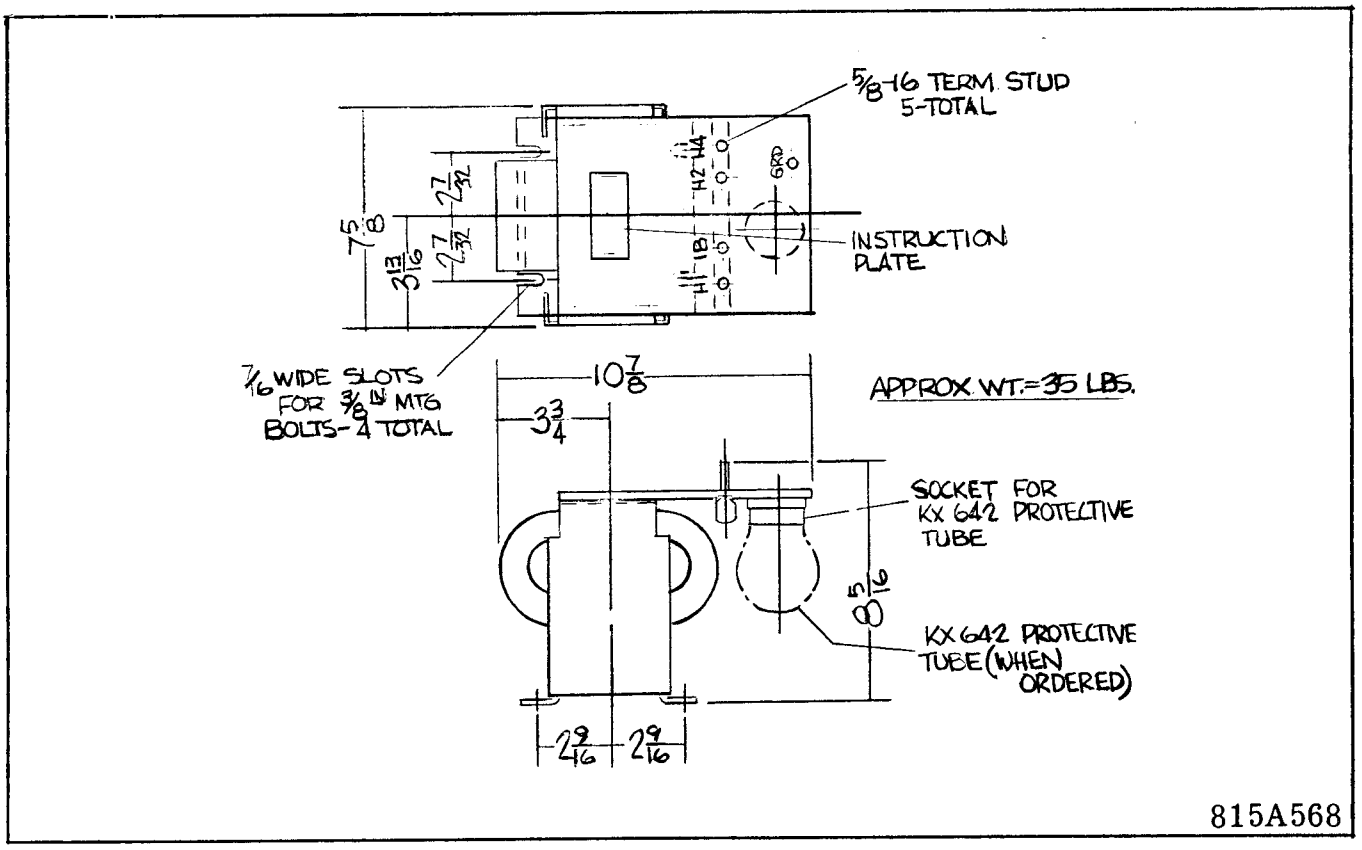

Fig. 5. Mutual Drainage Reactor Outline, 50 and 60 HZ Operation, for Protective Equipment for HCB and HCB-1 Relaying.

WESTINGHOUSE ELECTRIC CORPORATION
RELAY-INSTRUMENT DIVISION **NEWARK, N. J.**
Printed in U.S.A.

INSTALLATION • OPERATION • MAINTENANCE

INSTRUCTIONS

TYPE HCB PILOT WIRE RELAY SYSTEM

CAUTION: Before putting protective relays into service, make sure that all moving parts operate freely, inspect the contacts to see that they are clean and close properly, and operate the relay to check the settings and electrical connections.

APPLICATION

The type HCB relay is a high speed pilot wire relay designed for the complete phase and ground protection of two and three terminal transmission lines. Simultaneous tripping of the relay at each terminal is obtained in about 20 milliseconds for all faults. A complete installation for a two terminal line consists of two relays, two insulating transformers, and an interconnecting pilot wire circuit. For a three terminal line, three relays, three insulating transformers, and a wye-connected pilot wire circuit with branches of equal series resistance are required.

CONSTRUCTION

The relay consists of a combination positive and zero phase sequence filter, a saturating auxiliary transformer, two full wave rectifier units, a polar type relay unit, a neon lamp, and an indicating contactor switch (ICS), all mounted in a single case. The external equipment normally supplied with the relay consists of an insulating transformer, a milliammeter and test switch.

SEQUENCE FILTER

The sequence filter consists of a three-legged iron core reactor and a set of resistors designated R1 and Ro. The reactor has three windings; two primary and a tapped secondary winding, wound on the center leg of a "F" type of lamination. The secondary taps are wired to the circularly arranged R1 tap connections in the front of the relay. The R1 tap links also connect to the R_1 resistor (looped resistance wire). Ro consists of three tube resistors with taps wired to the circularly arranged Ro tap connections in the front of the relay. R_{1A} taps are on the R_1 resistance wire and are wired to the circularly arranged R_{1A} tap connections in the front of the relay.

SATURATING TRANSFORMER

The output of the sequence filter connects to the primary of a two-winding saturating transformer. The primary winding is tapped and wired to a tap block T in the front of the relay. The secondary winding is connected to the neon lamp and from a fixed tap to the relay coil circuits.

POLAR UNIT

This unit consists of a rectangular-shaped magnetic frame, an electromagnet, a permanent magnet, and an armature with either one or two contacts. The poles of the cresent-shaped permanent magnet bridge the magnetic frame. The magnetic frame consists of three pieces joined in the rear with two brass rods and silver solder. These non-magnetic joints represent air gaps which are bridged by two adjustable magnetic shunts. The operating and restraint windings are concentrically wound around a magnetic core. The armature is fastened to this core at one end and floats in the front air gap at the other end. The moving contact is connected to the free end of a leaf spring.

RESTRAINT TAPS

A set of restraint taps are located on the front of the relay near the polar unit. These taps are the maximum and minimum restraint taps of the relay.

INDICATING CONTACTOR SWITCH UNIT (ICS)

The d-c indicating contactor switch is a small clapper-type device. A magnetic armature, to which leaf-spring mounted contacts are attached, is attracted to the magnetic core upon energization of the switch. When the switch closes, the moving contacts bridge two stationary contacts, bypassing the main relay contacts. Also during this operation, two fin-

SUPERSEDES I.L. 41-971.2F, dated JULY 1974
Denotes change from superseded issue.

EFFECTIVE JANUARY 1977

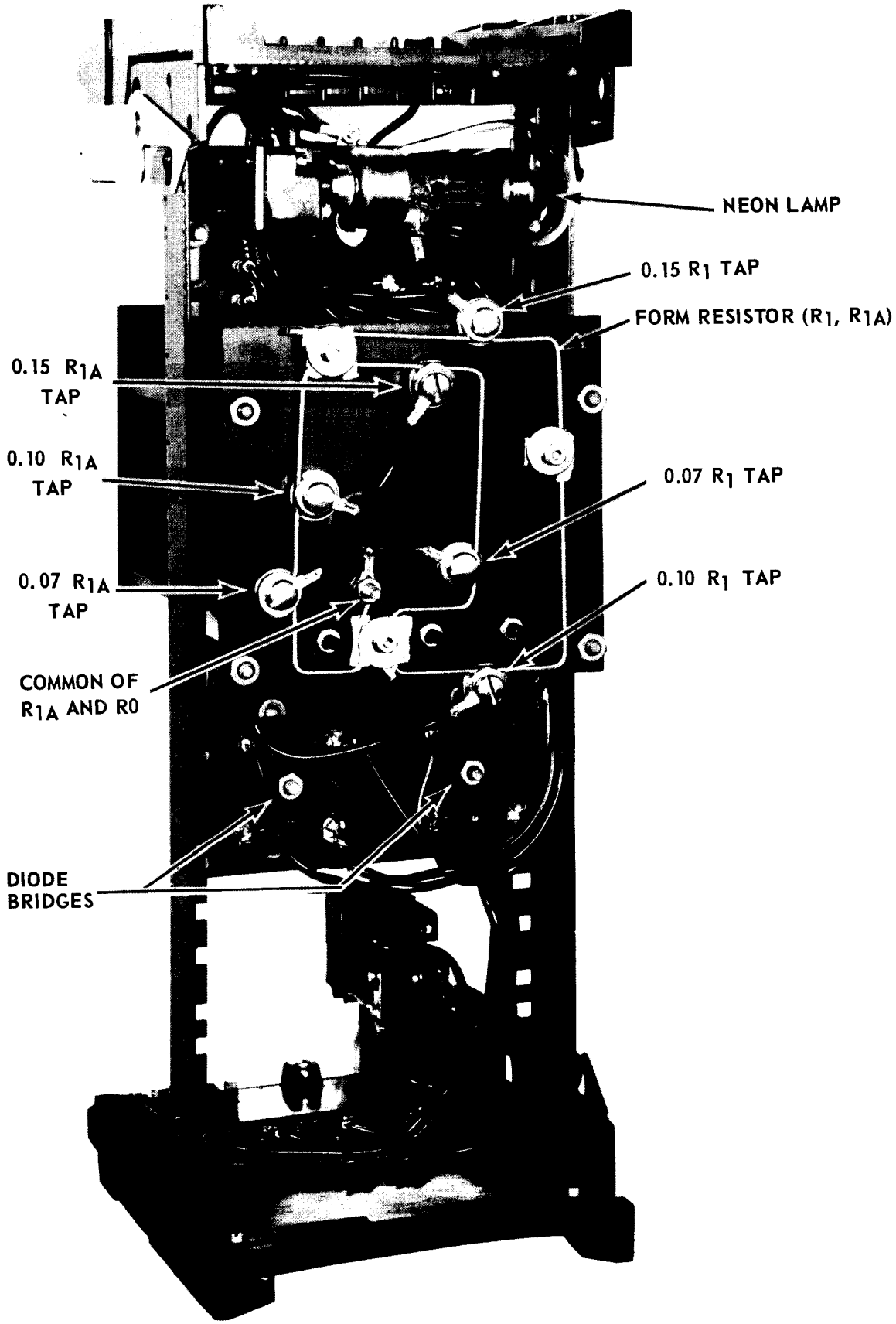

Fig. 2 Type HCB Relay Without Case (Rear View).

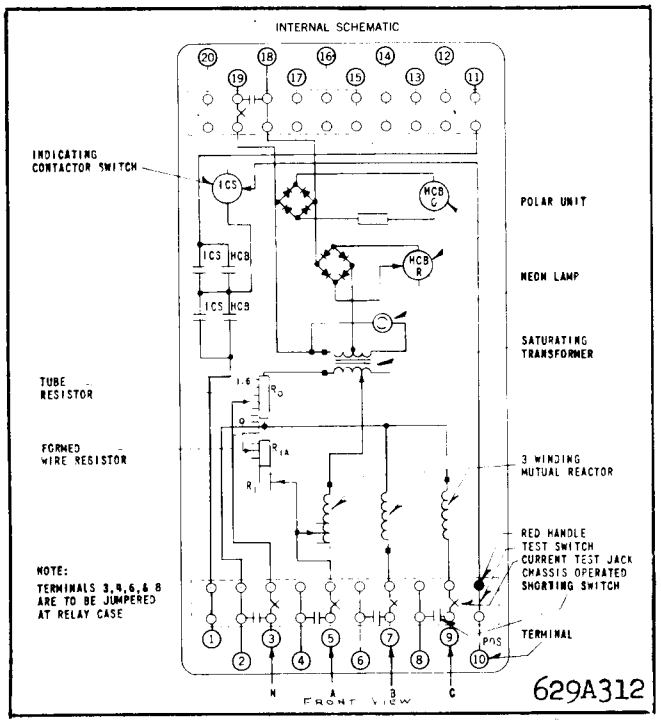

Fig. 3. Internal Schematic of the Type HCB Relay in FT-42 Case (Double Trip Circuit). For the Single Trip Relay the Circuits Associated with Terminal 11 are omitted.

SINGLE RELAY PICKUP (PILOT WIRE OPEN) I_S

Single relay pickup, I_S, is defined as the phase current required to operate one relay with the pilot wire side of the insulating transformer open circuited (H1-H4). The single relay pickup point in terms of filter voltage is:

$$V_F = 0.2T \qquad (2)$$

where T is the saturating transformer tap value. Single relay pickup is defined by equating (1) & (2):

$$0.2T = 2\,I_{A1}\,R_1 + I_{A0}\,(R_1 + 3R_0) \qquad (3)$$

Current I_S varies with the type of fault. For example, for a 3 phase fault, $I_S = I_{A1}$, since only positive sequence current is present. Substituting $I_S = I_{A1}$ in Eq. (3) & rearranging, the 3 phase fault pickup is:

$$I_S = I_{A1} = \frac{0.2T}{2\,R_1} = \frac{T}{10R_1} \text{ (3 phase fault)} \qquad (4)$$

If $R_1 = 0.1$, $R_0 = 1.6$ & $T = 4$:

$$I_S = \frac{T}{10R_1} = \frac{4}{10X0.1} = 4 \text{ amp. (3 phase fault)}$$

For a phase A to ground fault, if $I_{A1} = I_{A2} = I_{A0}$ (I_{A2} is the phase A negative sequence current):

$$0.2T = 2I_{A1}\,R_1 + I_{A1}\,(R_1 + 3R_0)$$

$$I_{A1} = \frac{0.2T}{3(R_1 + R_0)} = I_{A0}$$

But: $I_S = I_{A1} + I_{A2} + I_{A0}$

$= 3I_{A1}$

$$\text{So: } I_S = 3I_{A1} = \frac{0.2T}{R_1 + R_0} \text{ (A-G fault)} \qquad (5)$$

If $R_1 = 0.1$, $R_0 = 1.6$ & $T = 4$:

$$I_S = \frac{0.2T}{R_1 + R_0} = \frac{0.2x4}{0.1 + 1.6}$$

$$= \frac{0.8}{1.7} = 0.471 \text{ amp. (A-G fault)}$$

NOMINAL PICKUP (ALL RELAYS)

The nominal pickup, I_{nom}, is defined as

$$I_{nom} = KI_S \qquad (6)$$

where I_{nom} = total internal fault current
K = number of relays (2 or 3)
I_S = single-relay pickup with pilot wire disconnected (see above)

For example, for a phase-A-to-ground fault, $I_{A1} = I_{A0}$ with the pilot wire open circuited, the single-relay pickup was previously determined as $I_{AG} = 0.471$ ampere. For a two-terminal line, the nominal pickup for a phase-A-to-ground fault ($R_1 = 0.1$; Ro = 1.6; T = 4) is:

$$I_{nom} \text{ (A to G)} = 0.471K = 0.471 \times 2 = 0.942 \text{ ampere.}$$

MINIMUM TRIP (ALL RELAYS)

With equal inputs to all relays and zero pilot-wire shunt capacitance, the relays will operate at their nominal pick-up point. The minimum trip points will vary somewhat from nominal value, depending on the pilot-wire constants and the magnitude and phase angle of the various relay input currents. For example, Figure 6 shows the relay operating points for a two-terminal line, assuming input current to the near relay only.

An example of the characteristics with various current distributions is shown in Figure 7. The filter

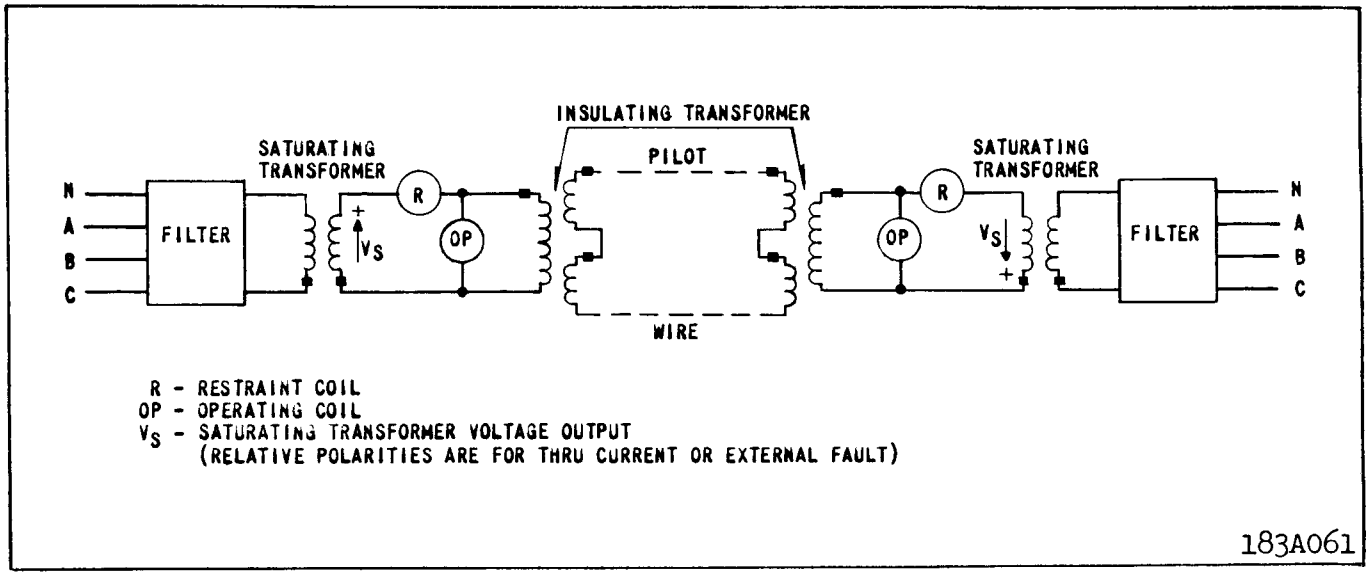

Fig. 4. Simplified External Schematic of the HCB Relay System.

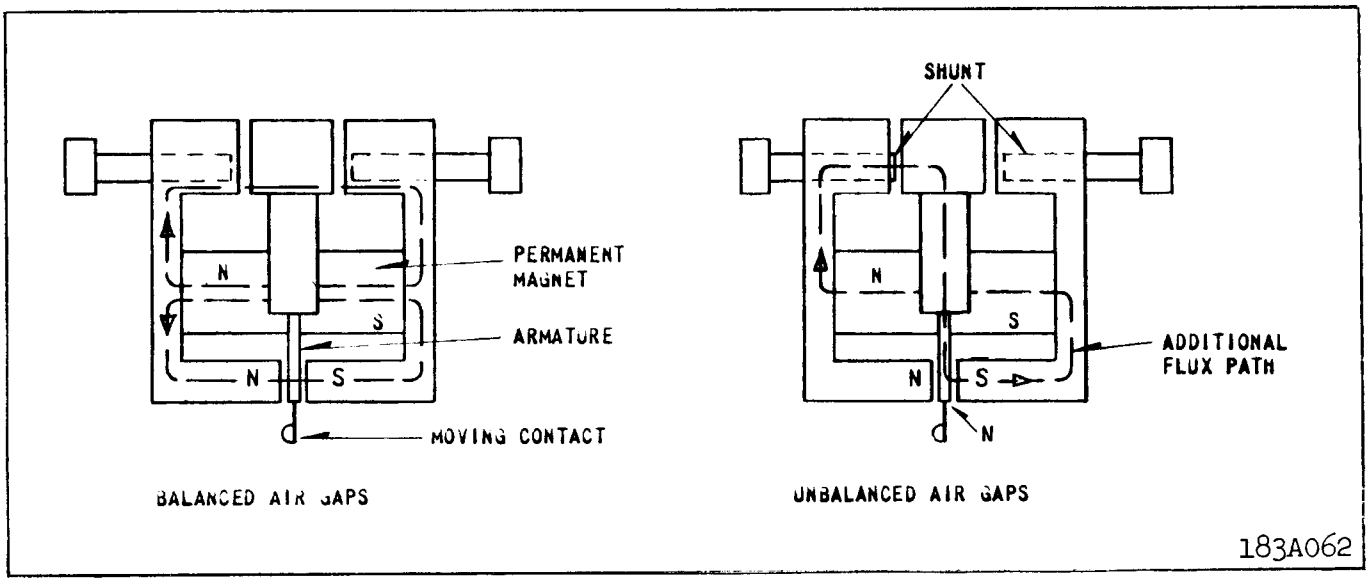

Fig. 5. Polar Unit Permanent Magnet Flux Paths.

output voltage, V_F, of each relay, as defined by equation (1) must be in phase or 180 degrees out of phase, in order for Figure 7 to apply.

INSULATING TRANSFORMER

Unless otherwise noted, all characteristics presented include an insulating transformer with each relay. Two ratios are available: 4/1 and 6/1. The high voltage side is connected to the pilot-wires.

PILOT-WIRE REQUIREMENTS

The relays should not be applied with pilot-wire series resistance or shunt capacitance exceeding the following values:

TABLE I

No. of Relays	Insulating Transformer Ratio			
	4/1		6/1	
	R_L	C_S	R_L	C_S
2	2000	1.5	—	—
3	500/LEG	1.8	1000/LEG	0.75

R_L = series loop resistance in ohms.

C_S = total shunt capacitance in microfarads.

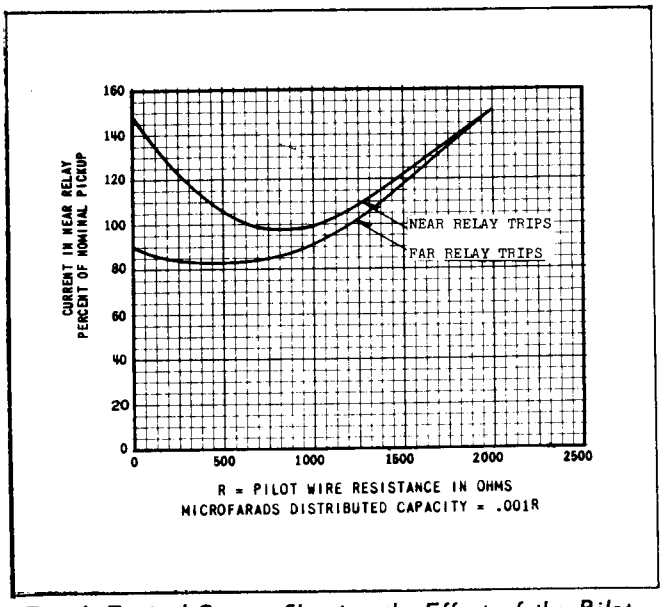

Fig. 6 Typical Curves Showing the Effect of the Pilot Wire on Minimum Trip Current, Two-Terminal Line (Maximum Restraint Tap). Insulating Transformer 4/1 ratio.

Where the shunt capacitance exceeds the above amount, it may be feasible in some cases to provide shunt reactors to compensate for the excessive capacitance. The amount of capacitance which can be compensated is limited and varies depending upon the magnitude of the pilot-wire distributed effect.

A shielded, twisted pilot wire pair, preferably of #19 AWG or larger, is recommended; however, open wires may be used if they are frequently transposed in areas of exposure to power circuit induction. The voltage impressed across either insulating transformer (H-1 to H-4) as a result of induction or a rise in station ground potential, should be less than 7.5 volts to prevent undesired relay operation.

For three-terminal applications, the loop resistance of all legs of the pilot wire must be balanced within 5 percent, with variable resistors as shown in Figure 8. The pilot wire resistance to be balanced is divided by 16 and 36 for the 4 to 1 and 6 to 1 ratio insulating transformers respectively, since the balancing resistors are located on the relay side of the insulating transformers.

Induced voltages and rises in station-ground potential may be handled by the following means:

a) Neutralizing reactors may be connected in series with the pilot wire to hold the pilot wire potential close to the remote ground potential in the presence of a rise in station-ground potential. They do not limit pilot-wire voltages to safe values in the presence of a longitudinal induced voltage. When using the neutralizing reactor, the pilot-wire sheath should be insulated from station ground to minimize sheath-to-pair potential in the presence of a rise in station-ground potential. All other pairs in the cable which are connected to station ground should also be protected with neutralizing reactors to minimize pair-to-pair voltages.

b) Drainage reactors may be connected across the pilot wire and to ground through a KX642 protector tube. The drainage reactor is particularly effective in limiting pair-to-ground voltage in the presence of an induced voltage. When the tube flashes, both wires are connected to ground through the drainage reactor windings which offer a low impedance to ground but maintain a high impedance to an a-c voltage across the wires. Thus, the HCB system will operate normally even though the protector tube has flashed over. The drainage reactor is not intended to handle a rise in ground potential.

c) The neutralizing and drainage reactors may be utilized together. If the neutralizing reactor is to be of any value, the drainage reactor through the KX642 protector tube must be connected to remote ground.

For information with reference to the insulation and protection equipment, refer to I.L. 41-971.4.

TRIP CIRCUIT

The main contacts will safely close 30 amperes at 250 volts d.c., and the seal-in contacts of the indicating contactor switch will safely carry this current long enough to trip a circuit breaker.

The indicating contactor switch has two taps that provide a pick-up setting of 0.2 or 2 amperes. To change taps requires connecting the lead located in front of the tap block to the desired setting by means of a screw connection.

SETTINGS

There are four settings in the relay. The correct tap setting should be determined as outlined under "Setting Calculations".

1) Restraint taps-maximum or minimum
   To change taps, connect the lead in front of the relay to the correct tap.

2) T tap- 4, 5, 6, 8, 10, 12, and 15
   To change taps, loosen center screw and move tap link to desired setting. Tap screw and center screw to be tight after tap change is made.

3) R_1 tap- 0.07, 0.10, 0.15 (tap plate marking)
Actual values are 0.075, 0.10, 0.15.
To change taps, loosen center screw and move tap link to desired setting. Insert two tap screws at each end of the tap link and tighten center screw as well as two tap screws.

4) Ro tap– 0.39, 0.51, 0.68, 0.90, 1.2 and 1.6
To change taps, loosen center screw and move tap link to desired tap. Tap screw and center screw to be tight after tap change is made.

5) R_{1A} Taps – (0.07, 0.10, 0.15) (tap plate marking)
Actual values are .025, .033, 0.05.
Note: It is recommended that these taps be set in the same tap as the R_1 tap for all applications.

To change taps, loosen center screw and move tap link to desired tap. Tap screw and center screw to be tight after tap change is made.

INDICATING CONTACTOR SWITCH (ICS)

The only setting required on the ICS is the selection of the 0.2 or 2.0 ampere tap setting. This selection is made by connecting the lead located in front of the tap block to the desired setting by means of the connecting screw.

SETTING CALCULATIONS

The HCB relay has four sets of taps: R_1, T, R_0, and restraint taps. The following discussion establishes limits for the various tap settings under different operating conditions. It should be kept in mind that settings to obtain operation on minimum internal fault conditions are based on the total fault current that flows into the protected line from all terminals.

TERMS

R_1, T, R_0 – Relay taps

I_{3p} – total minimum internal 3-phase secondary fault current fed from all terminals. divided by the number of terminals (2 or 3)

I_L – maximum secondary load current flowing through the protected line.

I_g – total minimum secondary ground fault current fed into the protected line from all terminals, divided by the number of terminals.

$I_{nom.}$(P-P) – nominal internal phase to phase fault sensitivity.

$I_{nom.}$(P-G) – nominal internal line to ground fault sensitivity.

R_{Nc} (I), R_{Nc} (II) – current transformer ratio at Station I and II respectively.

PHASE FAULT SENSITIVITY (R_1 and T Taps)

The phase fault pickup is determined by the R_1 and T taps. In order to operate on the minimum line-to-line fault current, the R_1 and T taps should be set for not more than:

$$\frac{T}{R_1} = 5I_{3P} \qquad (7)$$

In order to prevent operation on load current if the pilot wires become open circuited, the R_1 and T taps should be set for not less than:

$$\frac{T}{R_1} = 10I_L \qquad (8)$$

The available taps are:

R_1: 0.07, 0.10, and 0.15

T : 4, 5, 6, 8, 10, 12, and 15

Where sufficient fault current is available, it is recommended that the relays be set as follows:

$$\frac{T}{R_1} = 1.25 \times 10I_L = 12.5I_L \qquad (9)$$

The required T/R_1 ratio may be obtained by any combination of T and R_1. However, the T tap must be set the same at all stations. The R_1 taps may be utilized to compensate for different CT ratios with two-terminal lines if the pilot-wire loop resistance is 1000 ohms or less. Auxiliary CT's and identical R_1 tap settings must be used with different main CT ratios on all three-terminal lines and on two-terminal lines with more than 1000 ohms loop resistance in the pilot wire.

GROUND FAULT SENSITIVITY (R_0 Tap)

The ground fault pickup is determined by R_0 and T taps. (T should be determined by the phase setting.) In order to operate on the minimum line-to-ground fault current, the R_0 tap setting should be not less than:

$$R_0 = \frac{0.2T}{I_g} \qquad (10)$$

The available R_0 taps are: 0.39, 0.51, 0.68, 0.90, 1.2, and 1.6.

For overhead lines, it is recommended that the 1.6 R_0 tap be used to obtain maximum sensitivity.

For cable circuits, where the line charging current exceeds 5% of nominal pickup current, set R_0 for about:

$$R_0 = \frac{T}{7.5}$$

The R_0 taps at each line terminal should be set in the same proportion as the R_1 taps. (See phase fault sensitivity.)

R_{1A} TAPS

The R_{1A} taps marked 0.07, 0.10, and 0.15 (actual values are 0.025, 0.033, 0.05) are utilized to set R_0 = 1/3 R_1, where no zero sequence sensitivity is desired. Equation (10) does not apply for these three taps. These taps are used where R_0 is set in 0. Foraall other settings of R_0, the R_{1A} taps are automatically bypassed.

RESTRAINT TAP (Max. and Min.)

Set in maximum restraint tap for all two-terminal lines. Set in minimum restraint tap for all three-terminal lines. The use of maximum restraint on two terminal applications allows the relay to be used for all pilot wires as indicated in Table I. The use of minimum restraint on three terminal applications compensates for the desensitizing effect of a third terminal.

Note: The relay pick up will change by approximately 5% between setting in max. and min. restraint taps. Relay is shipped calibrated in the max. restraint tap. If set in min. restraint tap, calibrating will change. See "Adjustments and Maintenance" for re-calibration procedure.

TAPPED LOADS

Where one transformer bank is tapped to a line protected with two HCB relays, the critical point is to set above the fault current flow for a fault on the other side of the bank. Set the R_1 and T taps for not less than:

$$\frac{T}{R_1} = 5I_{3PL} \qquad (11)$$

where I_{3PL} = total current for a 3-phase fault on the low side of the bank.

Note that the tapped bank must not act as a ground source for high-side faults (e.g. high side connected in delta). Ordinarily this means that the R_0 tap settings need not be changed, since no zero-sequence current flows in the line when the low side is grounded.

SETTING EXAMPLE

CASE I

Assume:

Two-terminal line.

CT ratio =	600/5
Full-load current = I_L =	400A
Minimum 3-phase internal fault current:	
Through Station I =	1500A
Through Station II =	2500A
Minimum internal line-to-ground fault current:	
Through Station I =	400A
Through Station II =	0

Phase fault pickup:

$$\frac{T}{R_1}\text{(maximum)} = 5I_{3P} = 5 \times \frac{1500 + 2500}{2} \times \frac{5}{600} = 83.3$$

$$\frac{T}{R_1}\text{(minimum)} = 10I_L = 10 \times 400 \times \frac{5}{600} = 33.3$$

The phase fault current is sufficient to allow the relay to be set to prevent tripping on an open-circuited pilot wire. Therefore, set:

$$\frac{T}{R_1} = 12.5I_L = 41.7.$$

Set both relays for: T = 4, R_1 = 0.1.

Phase-to-phase fault pickup:

The phase-to-phase fault current sensitivity is dependent only on the positive sequence component of fault current. The positive sequence current component is 58% of the phase current. Thus the nominal current, I_{nom} (P-P), required to trip the system is:

$$I_{nom}\text{ (P-P)} = \frac{NI_S}{.58}$$

I_S = single relay pickup for positive sequence.

N = number of terminals.

$I_S = \frac{T}{10R_1}$ (from equation 4)

[for 2 terminal lines] I_{nom} (P-P) $= \frac{T}{2.89\ R_1} = \frac{4}{.289}$ = 13.8 A.

[for 3 terminal lines] I_{nom} (P-P) $= \frac{T}{1.92\ R_1} = \frac{4}{.192}$ = 20.8A.

Ground fault pickup:

$$R_0\text{ (minimum)} = \frac{0.2T}{I_g} = \frac{0.2 \times 4}{400/2} \times \frac{600}{5} = 0.48$$

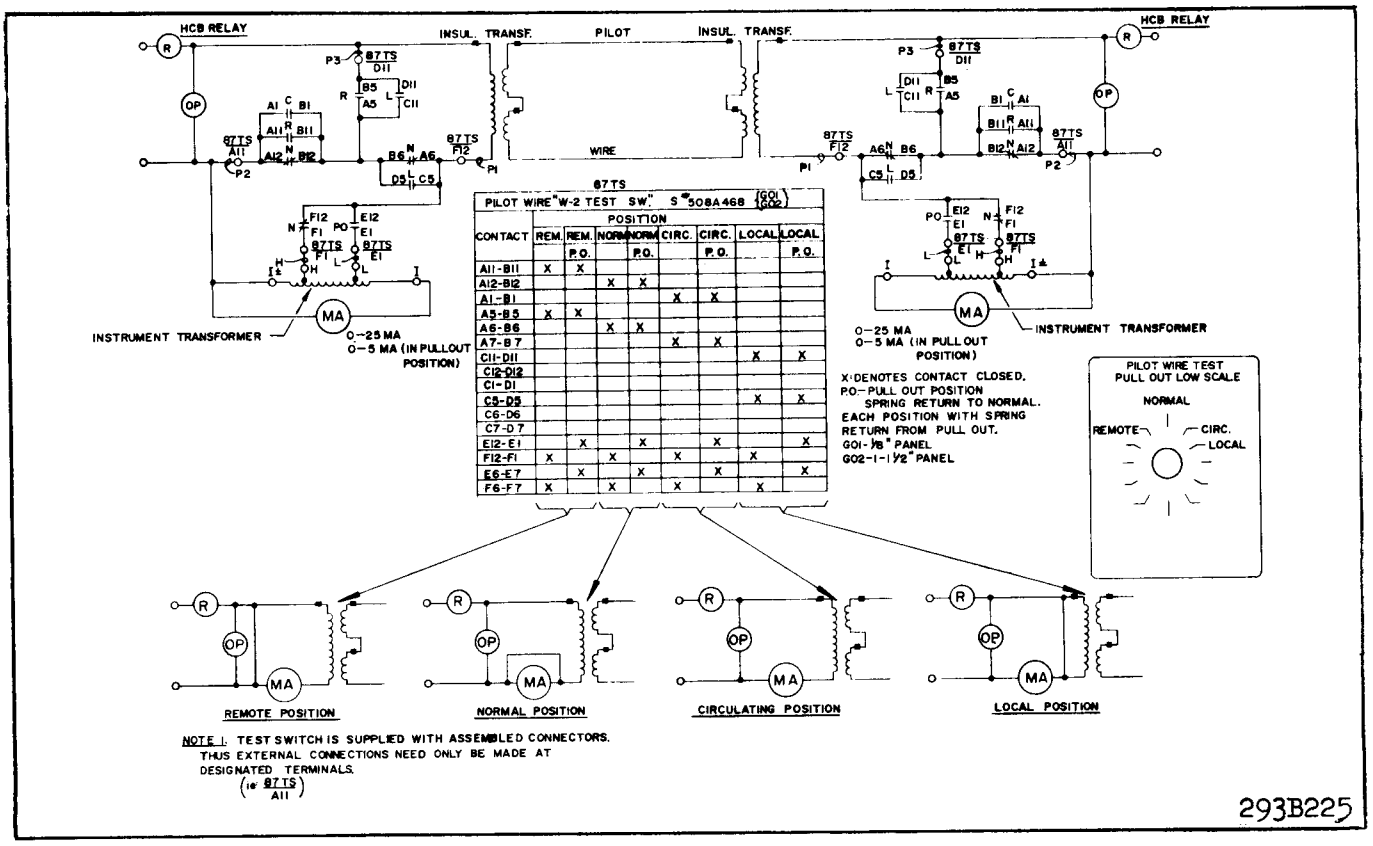

CONTACT	REM.	REM. P.O.	NORM.	NORM. P.O.	CIRC.	CIRC. P.O.	LOCAL	LOCAL P.O.
A11-B11	X	X						
A12-B12			X	X				
A1-B1					X	X		
A5-B5	X	X						
A6-B6			X	X				
A7-B7					X	X		
C11-D11							X	X
C12-D12								
C1-D1								
C5-D5							X	X
C6-D6								
C7-D7								
E12-E1		X		X		X		X
F12-F1	X		X		X		X	
E6-E7		X		X		X		X
F6-F7	X		X		X		X	

Fig. 9. HCB Relay Test Circuits with S#508A468601-G02 Type W-2 Switch and S#291B318A09 Milliammeter 0- 5-25 ma.

An R_0 tap exceeding 0.48 will provide tripping. As recommended for overhead lines:

Set $R_0 = 1.6$.

The ground fault nominal pickup is:

$$I_{nom}(P-G) = \frac{0.4T}{R_0 + R_1} = \frac{1.6}{1.7} = 0.943 \text{ ampere,}$$

$$\left[I_{nom}(P-G) = \frac{0.6T}{R_0 + R_1} \quad \text{for three-terminal lines} \right]$$

Restraint tap.

Use maximum restraint tap.

CASE II (DIFFERENT CT RATIOS)

Assume 400/5 CT's at Station II and 600/5 CT's at Station I, with less than 1000 ohms pilot wire loop resistance.

At Station I, set $R_0 = 1.6$ as in Case I. However, set $R_1 = 0.15$ to obtain R_1 settings proportional to the CT ratio. From equation 9:

$$T = 12.5 R_1 I_L = 12.5 \times 0.15 \times 400 \times \frac{5}{600} = 6.25$$

Set T = 8

Station II settings are:

T = 8 (Same as Station I)

$$R_1 = 0.15 \frac{R_{Nc}(II)}{R_{Nc}(I)} 0.15 \times \frac{400}{600} = 0.10$$

$$R_0 = 1.6 \times \frac{400}{600} = 1.07 \text{ (Set 1.2)}$$

INSTALLATION

The relays should be mounted on switchboard panels or their equivalent in a location free from dirt, moisture, excessive vibration, and heat. Mount the relay vertically by means of the four mounting holes on the flange for semi-flush mounting, or by means of the rear mounting stud or studs for projection mounting. Either a mounting stud or the mounting screws may be utilized for grounding the relay. The electrical connections may be made directly to the terminals by means of screws for steel panel mounting or to the terminal studs furnished with the relay for thick panel mounting. The terminals studs may be easily removed or inserted by locking two nuts on the stud and then turning the proper nut with a wrench.

For detailed Flexitest case information, refer to I.L. 41-076.

ADJUSTMENTS AND MAINTENANCE

CAUTION *Make sure that the neon lamp is in place whenever relay operation is being checked.*

ACCEPTANCE TESTS

The following tests are recommended when the relay is received from the factory.

Main Unit

Connect the relay to the insulating transformer, as shown in Figure 8, and set $R_1 = 0.10$, $R_0 = 1.6$, $T = 4$, and maximum restraint tap. With the insulating transformer terminals H1 and H4 open circuited, measure the minimum pick-up current, I_{79} (min.), with current applied through terminals 7 and 9. This value should not be greater than:

7.28 amperes.

NOTE: The relay may operate at values of current lower than 7.28 amperes depending upon the insulating transformer used and the prior history of the polar unit. The pickup should not be lower than 4.8 amperes. To increase pickup, short H_1-H_4 of insulating transformer, apply 40 amperes momentarily to terminals 3 and 5 of relay and check pickup of relay. Should be between 6.9 to 7.0 amperes. If not, the polar unit should be recalibrated per "polar unit calibration."

Now, connect a resistance, R_{PW}, across H1 and H4 of the insulating transformer, with a 10-mfd capacitor connected between H2 and H3. Connect a capacitor, C_{PW}, in parallel with R_{PW}. With R_{PW} and C_{PW} set as specified in Table II suddenly apply $I_{35} = 30$ amperes (through terminals 3 and 5).

TABLE II

Rpw Test - Max. Restraint Tap

$R_1 = 0.10$, $R_0 = 1.6$, $T = 4$

Insulating Transformer Ratio	R_{PW} † in ohms		C_{PW} in microfarads
4 to 1	1200	1900	0.75
6 to 1	2700	4300	0.33

† The relay should not operate at the lower value of Rpw, but should operate at the higher value.

Additional tests for the sequence filter and the operating unit are described under "Calibration Check." These latter tests are not required unless the relay fails to meet the acceptance tests.

Indicating Contactor Switch (ICS)

Close the main relay contacts and pass sufficient direct current through the trip circuit to close the contacts of the ICS. This value of current should not be greater than the particular ICS tap setting being used. The indicator target should drop freely.

CALIBRATION CHECK

The following tests are recommended whenever a check on the relay calibration is desired.

Over-all Relay Check

Over-all calibration can be checked by the procedure described under "Acceptance Tests." If the relay has been re-calibrated in the minimum restraint tap (factory calibration is made in the maximum restraint tap), the R_{PW} test should be made in accordance with Table III instead of Table II.

TABLE III

Rpw Test - Min. Restraint Tap

$R_1 = 0.10$, $R_0 = 1.6$, $T = 4$

Insulating Transformer Ratio	R_{PW} † in ohms		C_{PW} in microfarads
4 to 1	800	1400	0.75
6 to 1	1800	3100	0.33

† The relay should not operate at the lower value of Rpw, but should operate at the higher value.

Sequence Filter: Remove tap screw T and connect a high-resistance voltmeter across this open-circuited point by connecting to the tap plate and to one of the saturating transformer taps at the rear of the tap block. Energize the relay with $I_{79} = 6.94$ amperes (terminals 7 and 9). The measured open-circuit voltage, V_F, should be:

$$V_F = 8R_1 \pm 5\% \text{ volts.}$$

(e.g., if $R_1 = 0.1$, $V_F = 8 \times 0.1 = 0.8$ volt.)

Repeat this voltage measurement with $I_{59} = 6.94$ amperes.

Operating Unit: The following test will check the polar unit calibration and the performance of the rectifiers. Connect a variable non-inductive resistor across the high-voltage terminals of the insulating transformer (H1 to H4), and connect d-c milliammeters in series with the operating and restraining coils of the polar unit by opening these circuits. (The restraint can be opened at the tap circuit for max. and min. restraint. The operating circuit has to be opened at the polar unit.) These milliammeters should have

low resistance and should be capable of reading in the order of 20 to 25 ma in the operating coil and 100 to 150 ma in the restraining circuit. Using T = 4, R_1 = 0.1, R_o = 1.6, energize the relay with I_{35} = 10 amperes (terminals 3 and 5) and increase the variable resistance across the insulating transformer high-voltage terminals until the relay just trips. The values obtained should conform substantially to the following equations:

For minimum restraint

$$I_o = 0.12\ I_R + 8$$

For maximum restraint

$$I_o = 0.16\ I_R + 8$$

where I_o and I_R are operating and restraining coil coil currents, respectively, in milliamperes. The results are subject to variations between individual relays, due to different exciting impedances of the insulating transformers. However, the value should never be lower than:

For minimum restraint

$$I_o = 0.12\ I_R + 4$$

For maximum restraint

$$I_o = 0.16 I_R + 4$$

CALIBRATION PROCEDURE

If the factory calibration has been disturbed, the following procedure should be followed to recalibrate the relay.

FILTER CALIBRATION

A. R_1 Taps

1. Disconnect T current tap link and place Ro tap in 1.6
2. Connect voltmeter (low-reading, high resistance rectox) across relay terminal 2 and the common of T tap block.
3. Pass 5 amperes a.c. into terminal 5 and out terminal 9 of the relay.
4. Adjust the corresponding R_1 slide wire position (see Fig. 2 for location) to be within limits of following table for each specified setting of R_1 tap screw.

R_1 Tap Setting	Volts A.C.
.15	0.865 ± .008
.10	0.577 ± .007
.07	0.433 ± .005

B. R_{1A} Taps

1. Disconnect T current tap link and set Ro in O tap.
2. Connect a.c. voltmeter across relay terminal 3 and the common connection of R_{1A} and Ro (see Fig. 2 for location).
3. Pass 5 amperes a.c. into terminals 5 and out terminal 9 of the relay.
4. Adjust the corresponding R_{1A} slide wire position (see fig. 2 for location) to within limits of following table for each specified setting of R_{1A} Tap screw

R_{1A} Tap Setting	Volts A.C.
.15	0.250 ± .005
.10	0.167 ± .003
.07	0.125 = .003

C. Ro Taps

No adjustments can be made on the Ro resistors. Value of resistance can be checked by passing 5 amperes a.c. through terminal 3 and out terminal 9. T tap must be disconnected. Following voltages should be measured across terminal 2 and the specified tap of Ro.

Ro Tap Setting	Volts A.C.
.39	1.85 to 2.05
.51	2.45 to 2.68
.68	3.28 to 3.60
.90	4.33 to 4.70
1.20	5.78 to 6.27
1.60	7.72 to 8.38

Polar Unit Contact Adjustment: Place a 0.065 to 0.072 inch feeler gage between the right hand pole face and the armature. This gap should be measured near the front of the right hand pole face. Bring up the back-stop screw until it just makes with the moving contact. Place a 0.030 to 0.045 feeler gage between the moving contact and the stationary contact on the left-hand side of the polar unit. Bring up the stationary contact until it just makes with the gage and lock in place. For relays with double contacts make sure that both upper and lower contacts make at the same time.

Polar Unit Calibration: Connect the restraint tap link in the position in which it will be used. Connect terminals X1 and X2 of the insulating transformer across the pilot-wire terminals of the relay. Connect the relay taps on T = 4, R_1 = 0.1, R_o = 1.6.

The sensitivity of the polar unit is adjusted by means of two magnetic, screw type shunts at the rear of the element. Looking at the relay front view, turning out the right hand shunt decreases the amount of current required to close to the right hand stop. Conversely, drawing out the left hand shunt decreases the amount required to trip the relay. In general, the farther out the shunt screws are turned, the greater the toggle action will be and as a result, the dropout current will be lower. In adjusting the polar elements, be sure that a definite toggle action is obtained, rather than a gradual movement of the armature.

Start with both shunt out 4 to 5 turns. Short out the pilot wire on the high side of the insulating transformer. Momentarily apply 40 amperes from terminals 5 to 3. Now remove the short from H1 to H4 and, adjust the right hand shunt such that the contacts close with a positive snappy toggle action at I_{79} = 6.9 to 7.0 amperes. After this adjustment is complete, short out pilot wire and apply 40 amperes momentarily from terminals 5 to 3. Now remove the short from H1 to H4 and, check pickup for I_{79}. If value has changed from before, it will be necessary to re-adjust the right hand shunt. Several trials may be necessary before the pickup will be constant. In each case, the 40 amperes should be applied before any additional adjustments are performed on the shunt.

After the shunts have been adjusted, apply 40 amperes momentarily to terminals 3 and 5 of the relay with the pilot wire open. Pickup will be approximately 5 amperes with current applied to terminals 7 and 9. This change in pickup is due to a change in the residual magnetism in the polar unit of the relay. In the de-energized state, the permanent magnet of this unit produces a flux or magnetic bias to keep the contacts open. When the unit is energized, a second flux (electrical) is produced which either adds to or substracts from the magnetic flux. When the electrical flux is removed, the magnetic structure of the polar unit is changed. Hence, the flux produced by an excess of restraint current, adds to the magnetic bias, and the flux produced by an excess of operating current substracts from the magnetic bias. This characteristic is inherent in the polar unit and has no affect on the overall performance of the relay.

After the shunt adjustment has been made, change the input current connections to terminals 3 and 5. Apply 40 amperes with H1 and H4 terminals shorted. Remove short and measure pickup with current applied to terminals 3 and 5. The relay should trip with I_{35} = 0.45 to 0.55 amperes.

ROUTINE MAINTENANCE

Contacts: All contacts should be cleaned periodically. A contact burnisher, S#182A836H01, is recommended for this purpose. The use of abrasive material for cleaning is not recommended, because of the danger of embedding small particles in the face of the soft silver and thus impairing the contact.

ICS Unit: Close the main relay contacts and pass sufficient direct current through the trip circuit to close the contacts of the ICS. This value of current should not be greater than the particular ICS tap setting being used. The indicator target should drop freely.

Operating Unit: Check the relay minimum pickup, with the pilot wires disconnected from terminals H1 and H4 of the insulating transformer, by energizing with I_{79} current (terminals 7 and 9). Pick-up current should be:

$$I_{79}\ (\text{min}) = \frac{T}{5.77\ R_1} \pm 5\%\ \text{amperes}$$

Additional tests are recommended with the pilot wire connected as described under "Complete System Test."

COMPLETE SYSTEM TEST

At the time of the initial installation and at subsequent maintenance periods, it is recommended that the following relay system checks be made, with the pilot wire connected.

MINIMUM PICKUP

PRECAUTION: In making this test with the relay in place on the switchboard, it is necessary to connect the load box in the circuit between the relay and the "hot" side of the supply circuit. If this precaution is not observed, it is possible to cause a short circuit between the grounded station service supply circuit and the ground of the current transformer circuit.

The minimum pickup of each relay should be checked before starting the system tests. With taps as specified in Fig. 10, and the pilot wire circuit open on the high side of the insulating transformer, each relay should trip with I_{AN} = 0.45 to 0.55 amp. or with I_{BC} = 6.9 to 7.0 amperes

With the pilot wire connected, energize one relay with I_{AN} and determine the minimum pick-up of all relays. Repeat this test by energizing the other relay or relays. Record these values for future reference. If the neon lamp is lit during these tests, the pilot circuit is presenting too high a shunting effect on the relays.

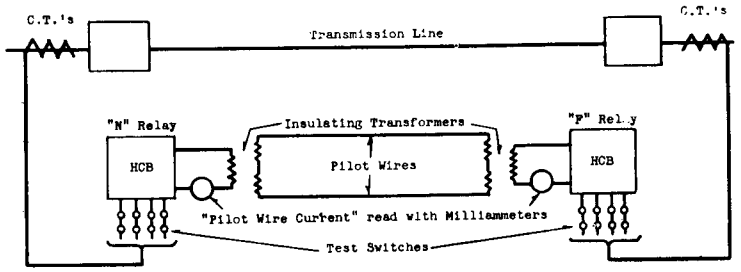

Note: The line should be carrying through load current amounting to at least 1.5 amperes as measured in the secondary of the Current Transformers. This test is based on the ratio of the C.T.'s being the same at each end of the line, in which case set the taps of both relays to $R_1 = .1$; $R_0 = 1.6$; $T = 4$ for this test.

	RELAY "N"					RELAY "F"				
Test No.	Test Switch NABC	Relay Current	Relay Trip	"Pilot Wire Current" Circulating	"Pilot Wire Current" Remote	Test Switch NABC	Relay Current	Relay Trip	"Pilot Wire Current" Circulating	"Pilot Wire Current" Remote
1		A,B,C,N	No	(1)	(1)		A,B,C,N	No	(1)	(1)
2		A,C,B,N	No	(2)	(2)		A,C,B,N	No	(2)	(2)
3		A,N	Yes	(3)	(0)		O	Yes	(3)	(3) (4)
4		O	Yes	(3)	(3) (4)		A,N	Yes	(3)	None
5		A,N	No	(3)	(3)		A,N	No	(3)	(3)
6		A,N	Yes	(6)			B,C,N	Yes	(6)	

REMARKS

Tests 1 and 2 are to check normal positive sequence rotation of phases.
Tests 3 and 4 simulate internal Phase A to Ground fault with single end feed.
Test 5 simulates an external Phase A to Ground fault. (5)
Test 6 simulates an internal Phase A to Ground fault, with equal feed from the two ends, since $I \quad + I_C = - I_A$, with balanced load.

LEGEND OF TEST SWITCH SYMBOLS:

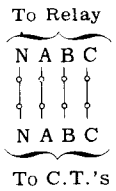

Normal Connection. All Currents to Relay.

EXAMPLE

Phase A current from C. T.'s to Relay. Phase B and C. T.'s shorted to neutral.

(1) The "pilot wire current" will vary depending upon the magnitude of the through load current and the characteristics of the pilot wire. See Figures 11 and 12.
(2) Since the relay is temporarily connected for negative sequence, it should have practically zero output in this test.
(3) These readings may be "off scale" depending upon the magnitude of the load current.
(4) The relay at this station should reset when the "far" current is being read because the local relay will be receiving no current from either the pilot wire or the current transformers.
(5) Test 4 and 5 can be repeated using phase B to neutral current, and again with phase C to neutral current, but this is not strictly necessary on the basis that, having proved the phase sequence with tests 1 and 2, and having proved the correspondence of phase A at the two ends of the line with test 5, then phases B and C must be correct.
(6) Some pilot wire current will be read, depending upon the magnitude of the distributed capacity of the pilot wire in combination with the magnetizing impedance of the insulating transformer.

Fig. 10. HCB Relay System Testing Procedure.

INTERPRETATION OF TESTS

1. Tests #1 and #2, Figure 10, are designed to indicate that the relays have been wired with the correct phase rotation. When the phase rotation is deliberately and temporarily changed by test #2, then the pilot-wire currents should be substantially zero. Any small value of pilot wire current which appears may be due to either a small unbalance in the load current, or else due to harmonic currents flowing through the line. If either relay has inadvertently been connected for the wrong phase rotation, then the fact will be apparent when reading local current. Local current should be interpreted from Figure 13, with the amount of load current which is present. If no current is read on test #1 for the local relay, and if current for test #2 is in line with Figure 13, then it is an indication that that particular relay has been connected for the wrong phase rotation.

a. In the event the pilot wire is open-circuited, the apparent circulating current will be quite low, being limited to the magnetizing current of the insulating transformer. Also, it will not be possible to read current from the remote end.

b. If the pilot wire is short-circuited, then the circulating current will be near normal, but it will not be possible to read current from the remote end.

2. If the pilot wire is reversed, (a) the circulating current will be low on test #1, but it will be possible to read pilot-wire current from the remote relay. (b) Both relays will trip on test #5. If the monitoring relays also suffer from this error in connection, then the error should be corrected at one relay location by reversing the connections to the H_1-H_4 terminals of the insulating transformer. However, if the monitoring relays do not suffer from this error, then the polarity of the pilot wires insofar as the HCB relay installation is concerned may be suitably corrected by making a reversal of connections either at the X_1-X_2 terminals of one insulating transformer, or at the output terminals of the relay, #18 and #19, Figure 3.

3. If the phases are rolled at one end of the line, then this will be picked up by test #5. On test #5, neither relay should trip when phase-A-to-neutral current is delivered to each of the two relays with the switching arrangement as shown and discussed. However, if one or both relays trip, then try checking the near relay, phase-A-to-neutral current, against phase-B-to-neutral current at the far relay. Also, check phase-A-to-neutral current at the near relay against phase-C-to-neutral current at the far relay. If, for example, neither relay trips when phase-A-to-neutral current is used for the near relay and phase-B-to-neutral current is used at the far relay, then it is an indication that what had been thought to be phase B current at the far location really identifies with phase A current at the near location. This identifies a rolled-phase condition, and also indicates the correction which must be made in the connections of the current transformer input to the relay.

4. One combination of errors which is somewhat tricky to pick up is the combination of pilot wires reversed plus a rolled-phase condition at one end. Let it be assumed that the pilot wire is reversed at the far end, making an error of 180 degrees. Then let it be assumed that the phases are also rolled by 120 degrees, thereby adding another error of 120 degrees. Adding these two together brings the total up to 300 degrees, which is within 60 degrees of what would be normal. Because of this, the only symptom which will appear in the first four tests is that the circulating current is likely to be lower than one would expect when read at one end or the other on test #1. However, test #5 may be used to identify this combination of errors. When the condition exists as described, when test #5 is extended to check phase A current at the near end against each of the three currents at the far end in turn, it will be found that at least one of the two relays will always trip. If this condition is found, reverse the pilot-wire connection, check out the rolled-phase condition and correct it, and then proceed with all six tests.

5. Test #6 is a final verification test.

Fig. 10 (continued)

LOADED CIRCUIT TEST

In performing these tests, the following procedure should be used.

1. Standard testing equipment is recommended for permanent installation with the relays as shown in Fig. 9. If this equipment is not available, a similar portable test should be set up using a low-resistance-a-c milliammeter.
2. Red-handle flexitest case switch should be open to interrupt the breaker trip circuit.
3. A test crew is necessary at each substation with a means of communication between them.
4. When the test calls for delivering only specified currents to the relay, it is necessary to use a thin piece of insulating material in the ammeter test jack. For example, test #5 of Fig. 10 relay "N". To apply phase A to N current to the near relay only, the switches associated with terminals 6, 7, 8, 9 of figure 3 must be open. Opening switches 6 and 8 short circuits the current transformers for phases B and C. **However, it is also necessary to insert the insulating material in the ammeter test jacks associated with terminals 7 and 9 in order to break up the connection between the filter in the relay chassis and the grounded input circuits from current transformers in phases B and C.**
5. To facilitate making test #2 of Fig. 10, two ammeter test plugs wired together with a foot or two of flexible wire should be used. With these two test plugs suitably wired together, one of them may be shoved in the ammeter test jack associated with terminal 7, Figure 3, and the other shoved in the ammeter test jack associated with terminal 9, Figure 3. (This should not be done until the switches for terminals 6 and 8 have been open, thus short circuiting the current transformers involved). It is desirable to wire the test plugs together such that when one is shoved in the one ammeter test jack with the red side up, and the other is shoved in the other ammeter test jack with the black side up, it is then known that the B and C phase currents to the relay have been reversed at the input to the chassis in line with test #2, Fig. 10. After these test plugs are properly inserted, it is then appropriate to close the switches associated with terminals 6 and 8, Fig. 3, in order to remove the short circuit from the current transformer secondaries.

Perform the tests as indicated in Figure 10 recording the milliammeter readings and the relay input current at the same instant, for future reference. The headings "Circulating" and "Remote" in the table of Figure 10 refer to the test switch positions, "CIRC" and "REM." For tests 3 to 6 of Figure 10, the input current should be increased to about 1.5 amperes by an auxiliary current transformer, if the secondary load current is below this value. Also record the input and output readings with the test switch in the "Local" position. Typical values for the "Local" position readings are shown in Figure 13.

THREE TERMINAL LINES

A similar procedure to Figure 10 should be followed for three-terminal line applications. In this case open the line circuit breaker at one terminal, and disconnect the loads from the pilot wire terminals of the HCB relay at that terminal. This leaves the remaining portion of the line operating as a two terminal line. Now perform the normal tests as outlined for the two terminal line system test. When these tests have been satisfactorily completed, return the third terminal relay to normal and close the breaker at that station. Repeat the above procedure with a different breaker open and relay disconnected. This will complete the check of the three terminal line.

ENERGY REQUIREMENTS

The volt-ampere burden of the type HCB relay is practically independent of the pilot-wire resistance and of the current tap used. The following burdens were measured at a balanced three-phase current of 5 amperes:

For tap 4, $R_1 = 0.075$ and $R_0 = 0.39$

Phase A	1.25 volt-amperes	0°
Phase B	0.30 volt-amperes	285°
Phase C	0.90 volt-amperes	45°

For tap 4, $R_1 = 0.15$ and $R_0 = 1.6$

Phase A	2.3 volt-amperes	120°
Phase B	4.6 volt-amperes	285°
Phase C	5.3 volt-amperes	45°

The angles above are the degrees by which the current lags its respective voltage.

The continuous rating of the relay is 10 amperes.

The two-second overload ratings of the relay are 150 amperes phase and 125 amperes ground currents.

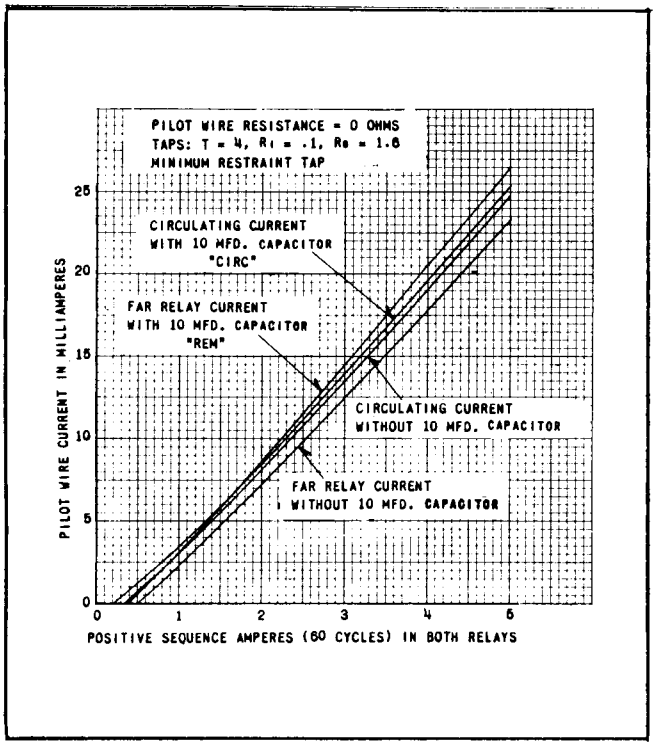

Fig. 11. Typical Test Output vs. Input Relay Current in a Two-Terminal Line with Zero Pilot-Wire Resistance.

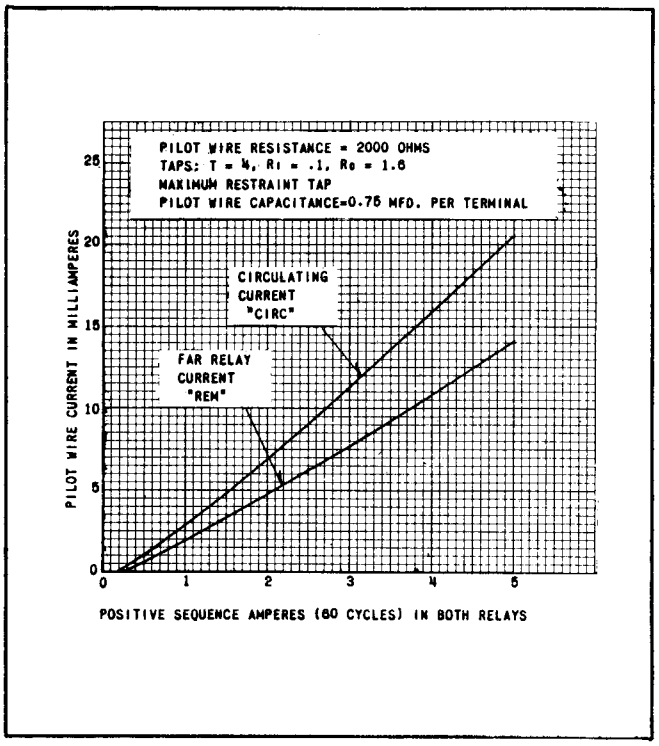

Fig. 12. Typical Test Output vs. Relay Current in a Two-Terminal Line with 2000-Ohm Pilot-Wire Resistance With or Without 10-mfd Capacitor.

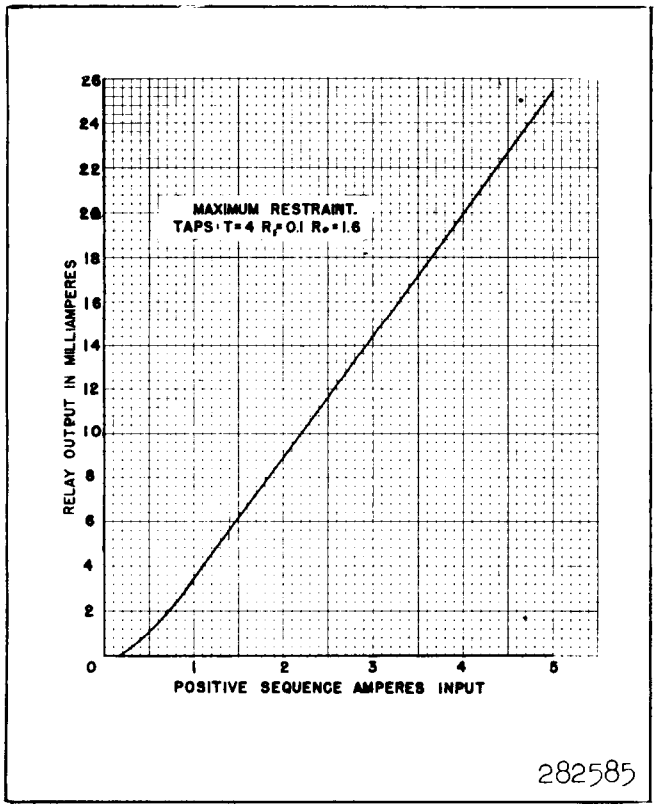

Fig. 13. Typical Curve of Relay Output vs. Positive-Sequence Input - Test Switch in Local Position.

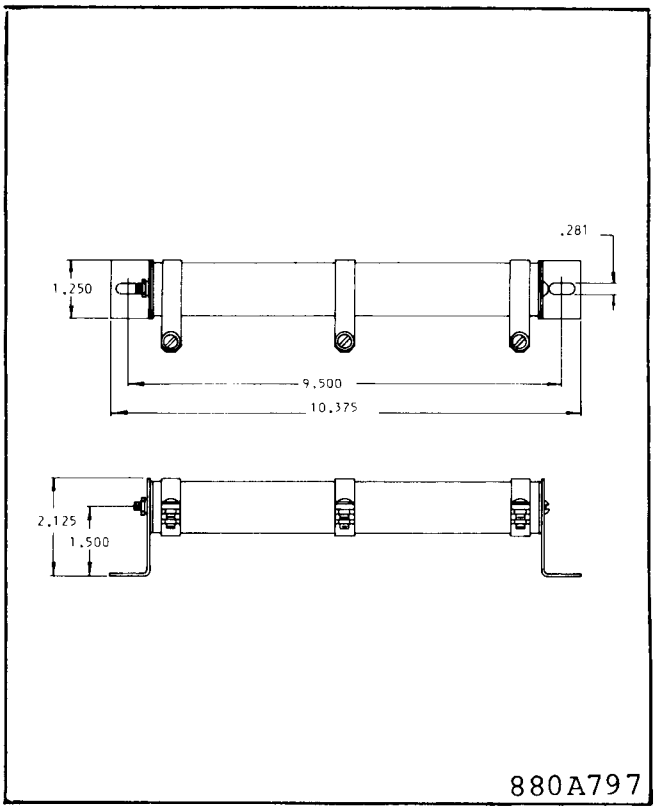

Fig. 14. Outline and Drilling Plan of 290B664G65 Balancing Resistor for Three-Terminal Line Applications.

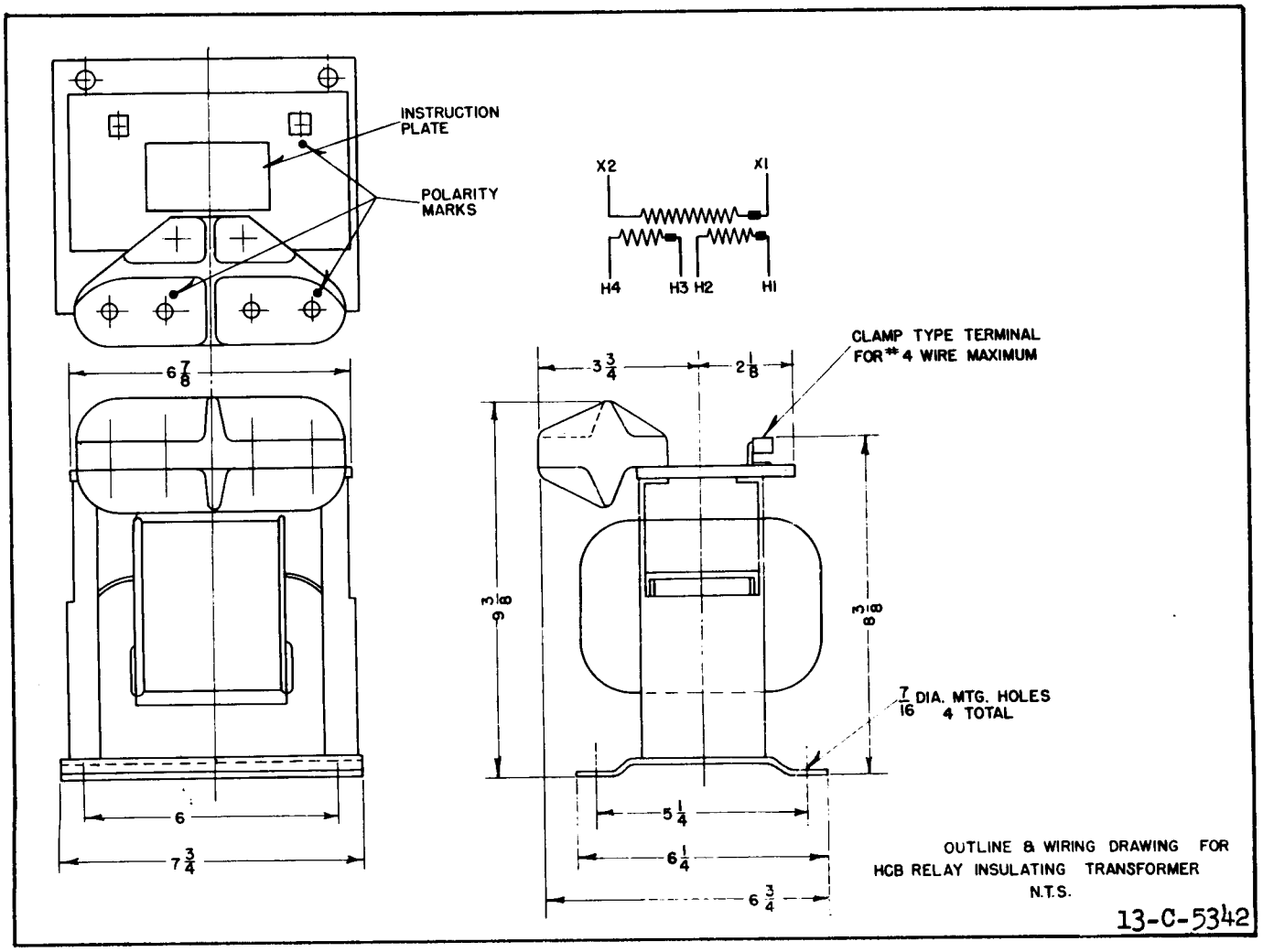

Fig. 15. Outline and Drilling Plan of HCB Relay Insulating Transformer.

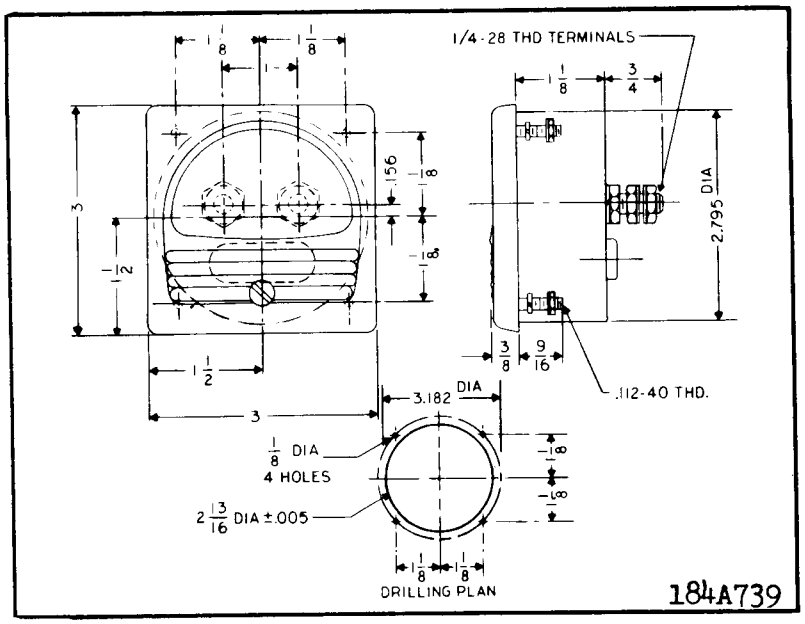

Fig. 16. Outline and Drilling Plan of the Semi-Flush-Type Test Milliammeter.

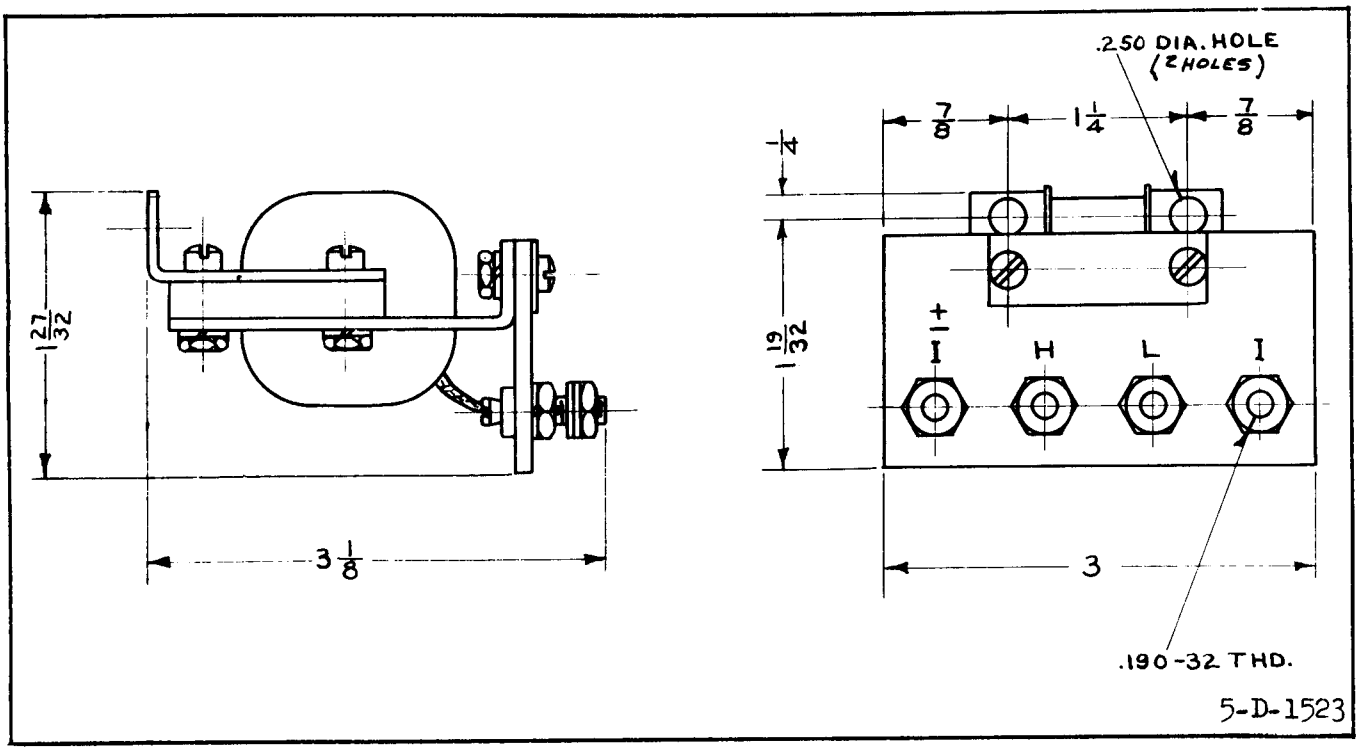

Fig. 17. Outline of the Test Milliammeter Auxiliary Transformer.

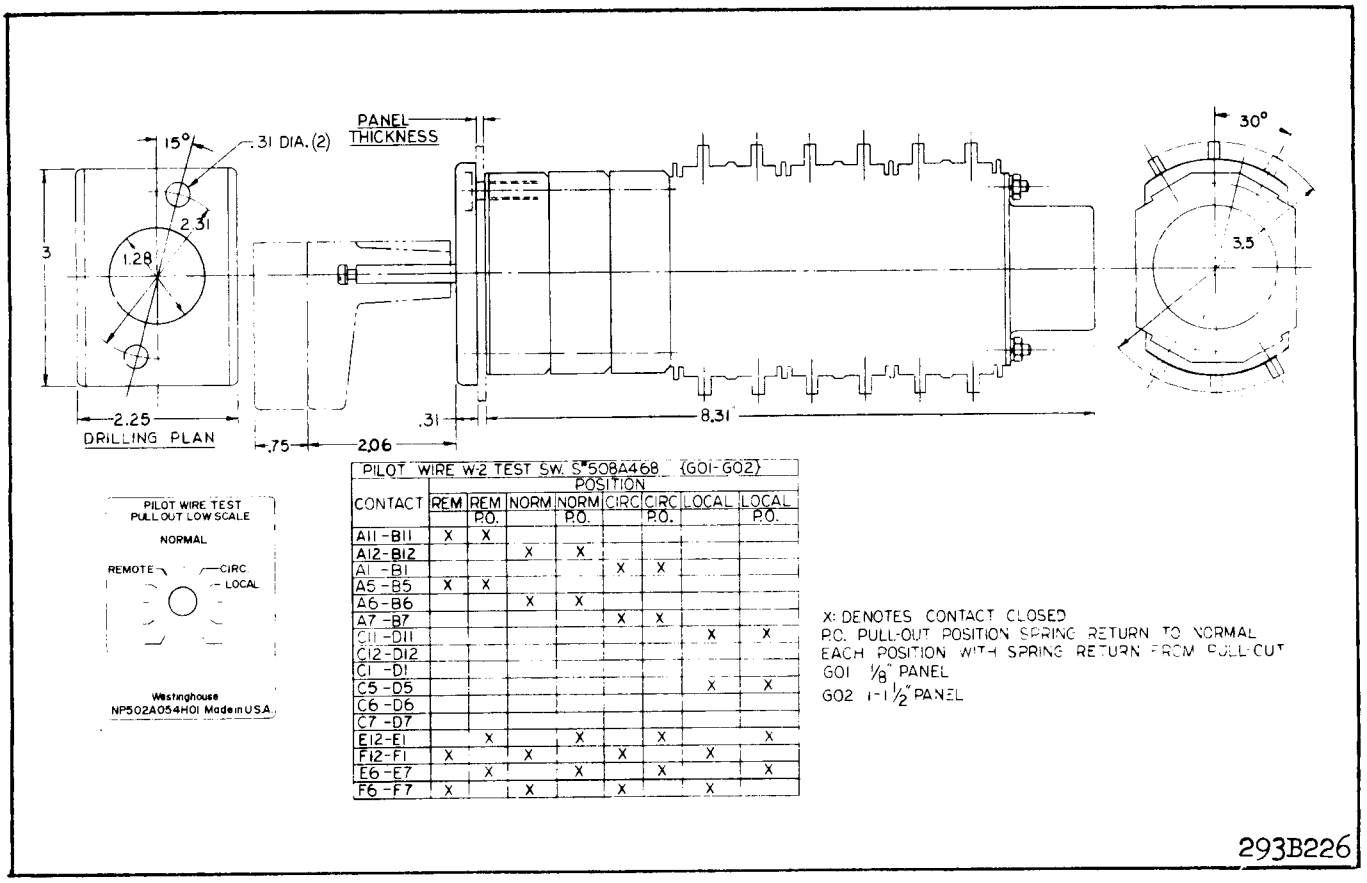

PILOT WIRE W-2 TEST SW. S-508A468 (G01-G02)

CONTACT	POSITION REM	REM P.O.	NORM	NORM P.O.	CIRC	CIRC P.O.	LOCAL	LOCAL P.O.
A11-B11	X	X						
A12-B12			X	X				
A1 -B1					X	X		
A5 -B5	X	X						
A6-B6			X	X				
A7 -B7					X	X		
C11-D11							X	X
C12-D12								
C1 -D1								
C5 -D5							X	X
C6 -D6								
C7 -D7								
E12-E1		X		X		X		X
F12-F1	X		X		X		X	
E6 -E7		X		X		X		X
F6 -F7	X		X		X		X	

Fig. 18. Outline and Drilling Plan of the Type W-2 Test Switch.

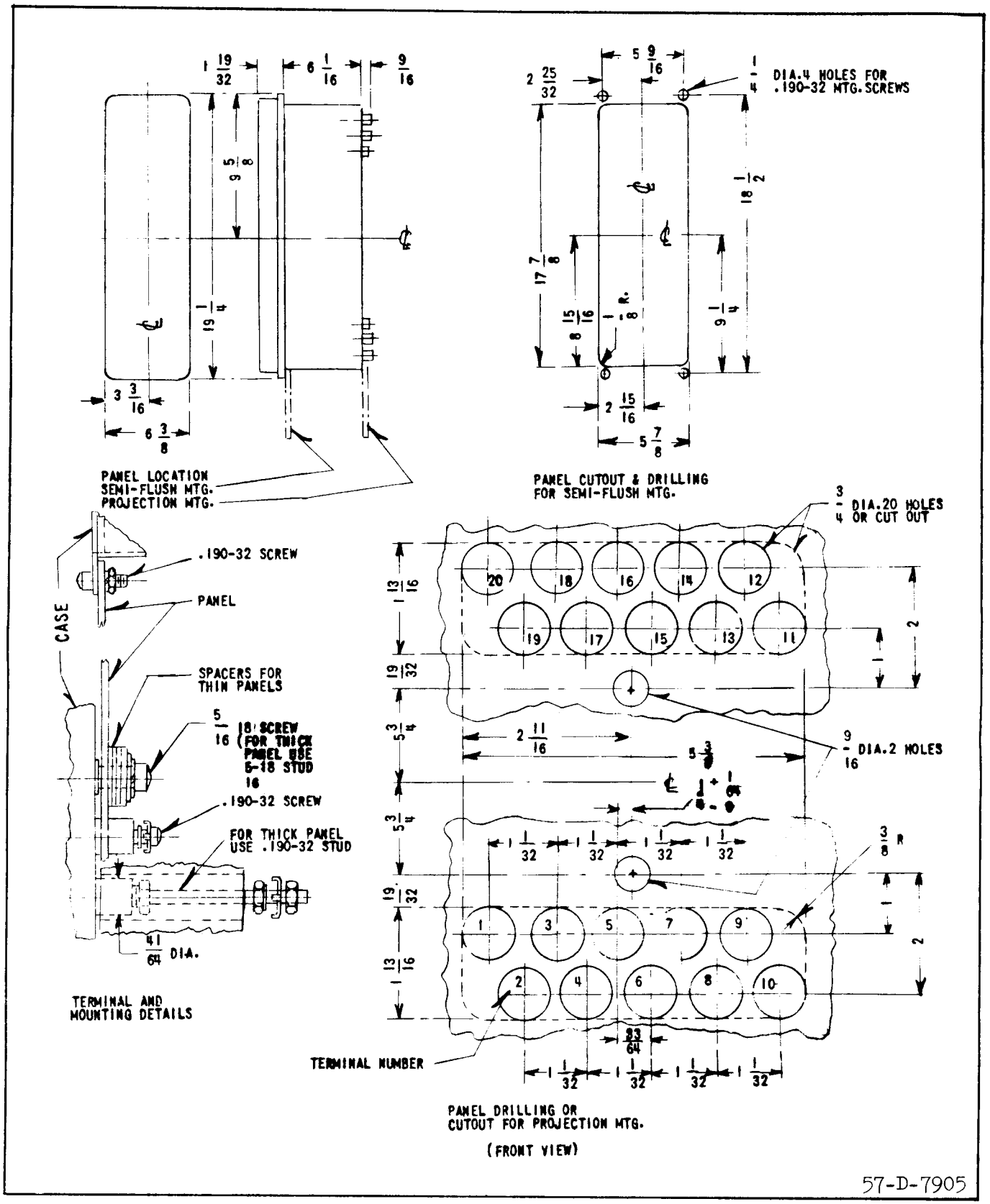

Fig. 19. Outline and Drilling Plan for the Type HCB Relay in the Type FT-42 Case.

PILOT-WIRE ENERGY

The current and voltage impressed on the pilot wire do not exceed 100 milliamperes and 60 volts. The wave form and magnitude of the pilot-wire current are such that telephone interference is within the limits allowed by the Bell Telephone Company. This permits the use of leased telephone lines as a pilot-wire channel.

RENEWAL PARTS

Repair work can be done most satisfactorily at the factory. However, interchangeable parts can be furnished to users who are equipped for doing repair work. When ordering parts, always give the complete nameplate data.

APPROXIMATE RESISTANCE VALUES OF COMPONENTS IN HCB RELAY

Transformer	Secondary Winding		Start to Tap 20 to 30 ohms
			Start to Finish 110 to 140 ohms
Polar Unit	Operating Coil		290 - 320 ohms
Polar Unit	Restraining Coil	Maximum	12 - 16 ohms
		Minimum	9 - 12 ohms
Resistor	Rc		41 - 44 ohms
Tube Resistor	Ro		As Marked on Ro Tap Plate
Looped Resistor	R1		As Marked on R1 Tap Plate
	R1A		As Marked on R1A Tap Plate
Rectifiers			IN91 Germanium Diodes
Indicating Contactor Switch			0.2 amp. Tap 6.5 ohms
			2.0 amp. Tap 0.15 ohms

R_C used in conjunction with 1N91 germanium diodes in order to match characteristics of relay with older style HCB relay using copper oxide rector type rectifiers.

WESTINGHOUSE ELECTRIC CORPORATION

RELAY-INSTRUMENT DIVISION **CORAL SPRINGS, FL.**

Printed in U.S.A.