February 1991
Supersedes Dimension Sheet 29-170, pages 35-36, dated November 1981
Mailed to: E, D, C/29-100A, 31-400A, 31-500A

Type NB and MARK 75® Type HNB

Page 35: Type NB, MARK 75® Type HNB
Page 36: Mounting Block for Type NB, MARK 75 HNB, SELTRONIC™ Types NC, MARK 75 HNC

AB DE-ION® Circuit Breakers

Type NB, MARK 75® Type HNB Breakers

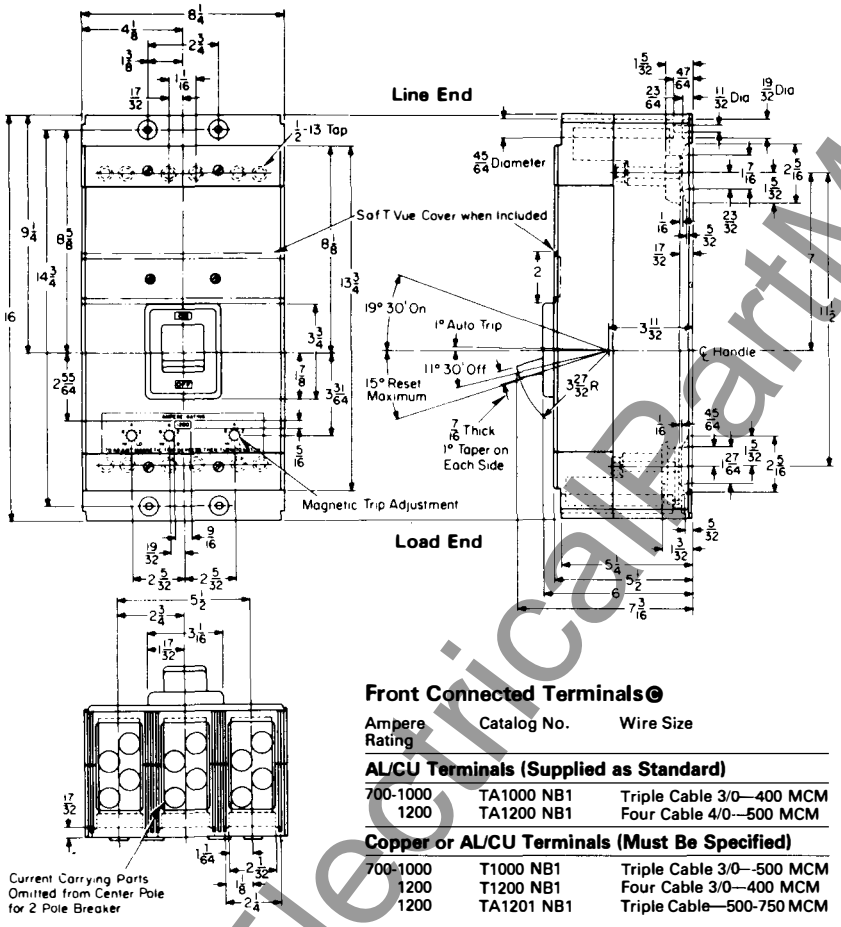

Front Connected Terminals©

Ampere Rating	Catalog No.	Wire Size
AL/CU Terminals (Supplied as Standard)		
700-1000	TA1000 NB1	Triple Cable 3/0—400 MCM
1200	TA1200 NB1	Four Cable 4/0—500 MCM
Copper or AL/CU Terminals (Must Be Specified)		
700-1000	T1000 NB1	Triple Cable 3/0—500 MCM
1200	T1200 NB1	Four Cable 3/0—400 MCM
1200	TA1201 NB1	Triple Cable—500-750 MCM

Bolted Rear Connected Studs

For 700 to 800 Amps

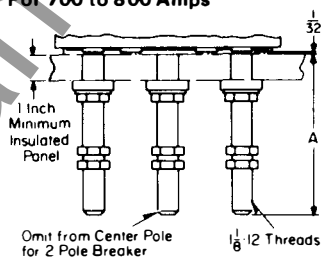

Style No.	A
623B222G01	5½
623B222G02	8
623B222G03	10½

For 900 to 1200 Amps Only

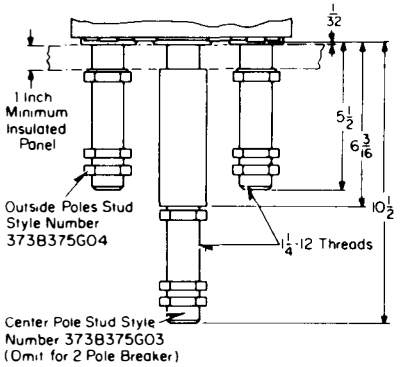

Drilling Plans

For Mounting Bolts
(Front Connected Terminals)

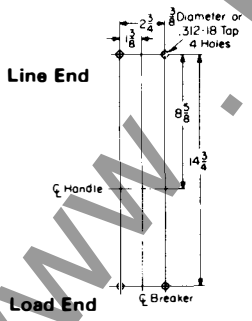

For Rear Connected Studs
(Insulated Panel)

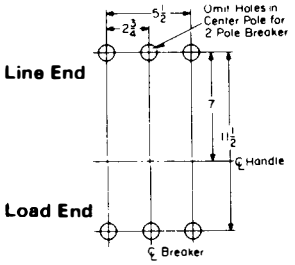

Style No.	A
623B222G01	5½
623B222G02	8
623B222G03	10½

Front Cover Cutout

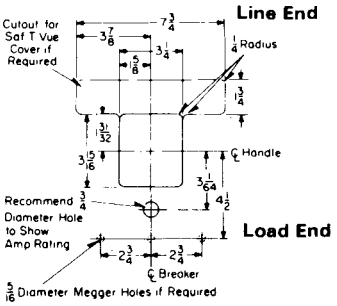

Reproduced From Drawing 371D578

© Changed since previous issue.

www.ElectricalPartManuals.com

Mounting Block for Type NB, NC, MARK 75® Type HNB, HNC Breakers

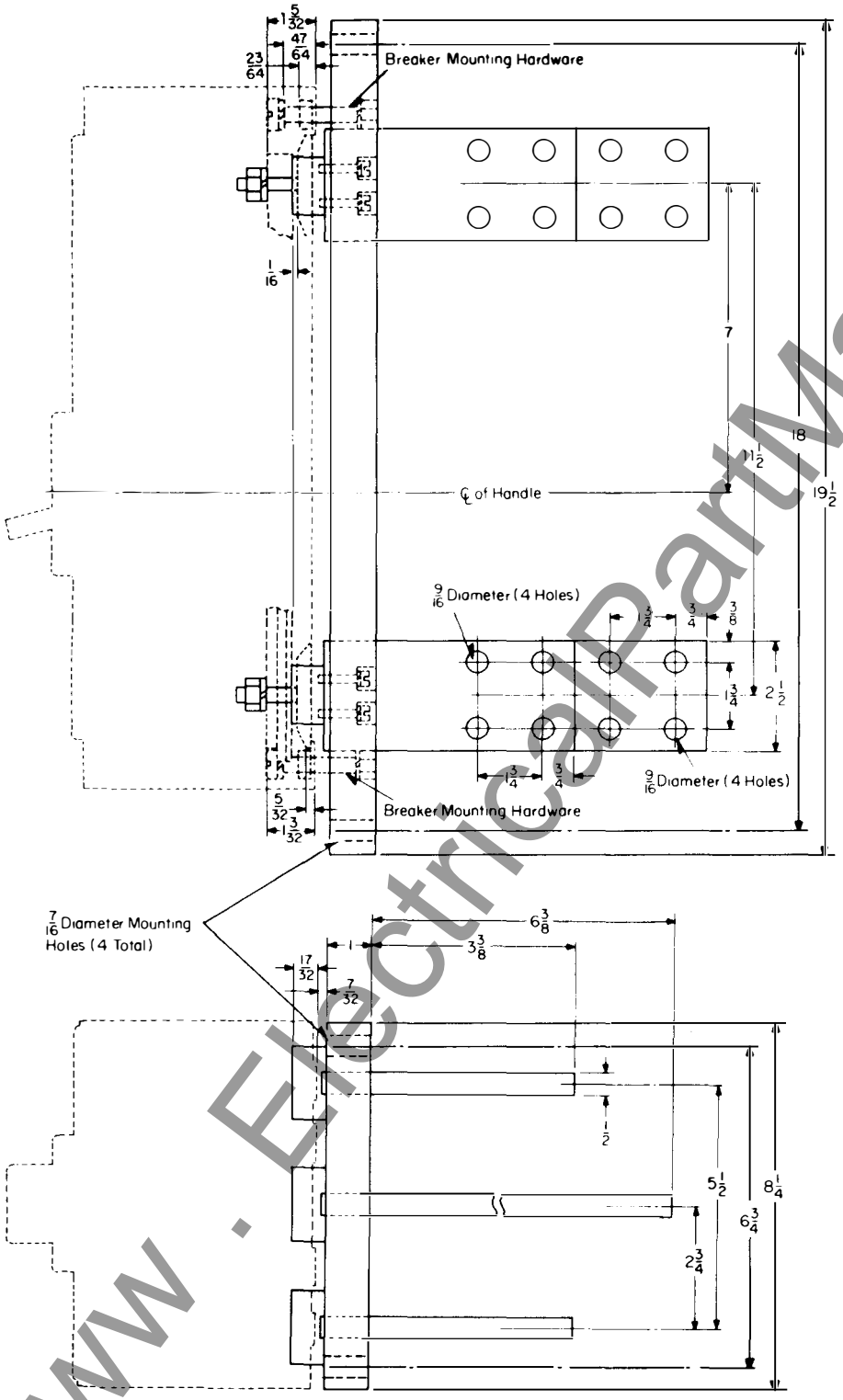

Reproduced From Drawing 4990D37

Printed in U.S.A.

www . ElectricalPartManuals . com

Westinghouse Series C® Molded Case Circuit Breakers L-Frame 70-600 Amperes

March 1996
New Information
Mailed to: E, D, C/29-100A, 31-400A, 31-500A

L-Frame OPTIM Three-Pole

L-Frame OPTIM Three-Pole Breakers

Front View

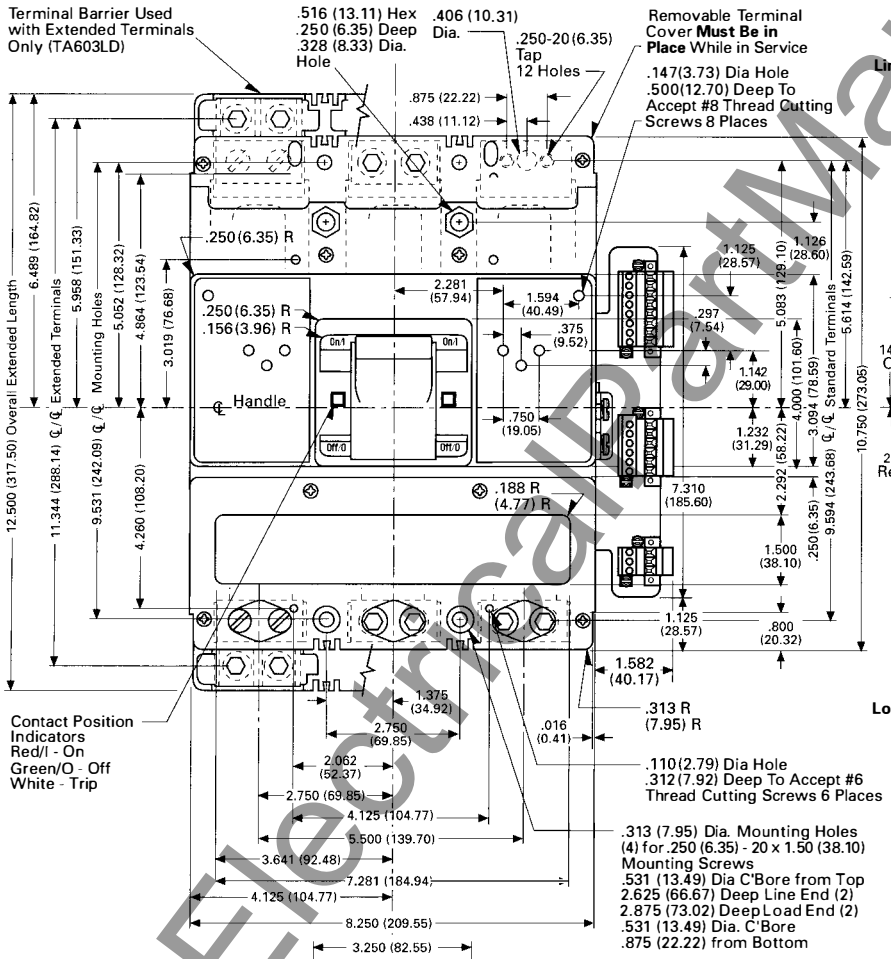

Side View

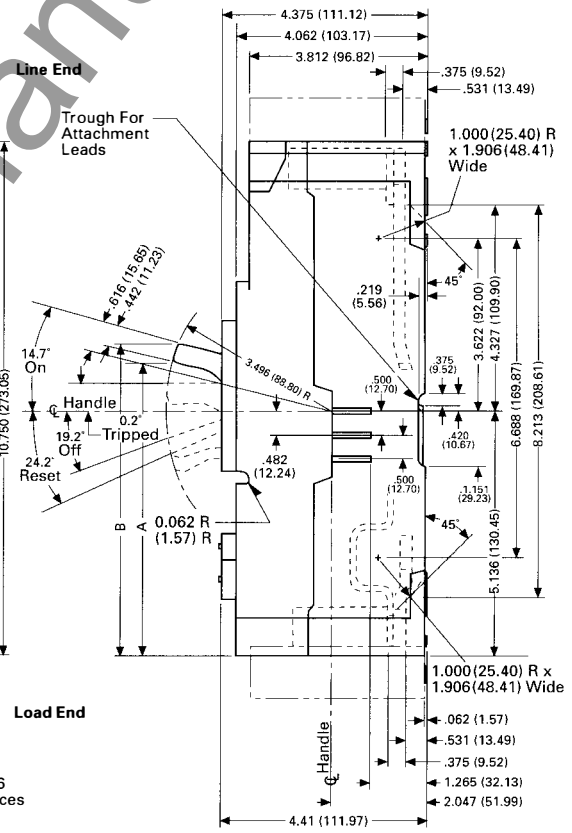

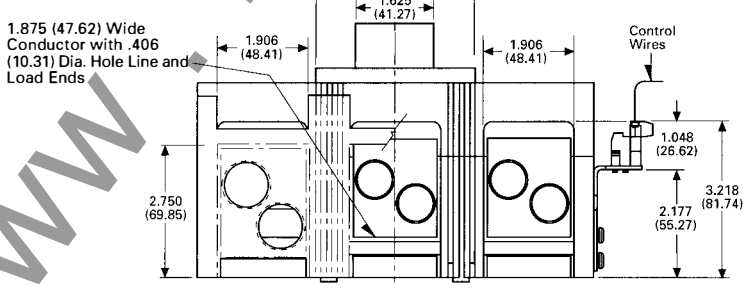

Terminal Arrangements

Terminal Catalog No.	Wire Range (MCM)	Number of Cables	Torque
Copper Only Cable (Supplied in Kit Form)			
T602LD	250-350	2	275 Lb-in. (31.1 Nm)
Copper or Aluminum Cable (Supplied in Kit Form)			
TA602LD	250-350	2	275 Lb-in. (31.1 Nm)
TA603LD	400-500	2	275 Lb-in. (31.1 Nm)
TA401LD	4/0-600	1	400 Lb-in. (45.2 Nm)
TA450LD	4-4/0	2	275 Lb-in. (31.1 Nm)

Reproduced from drawings 1493D63 and 1493D67

Dimensions in parentheses in millimeters

Dimensions for estimating purposes only

www.ElectricalPartManuals.com

Westinghouse Series C® Molded Case Circuit Breakers, L-Frame, 70-600 Amperes

L-Frame OPTIM Three-Pole Breakers, *Continued*

Drilling Plans

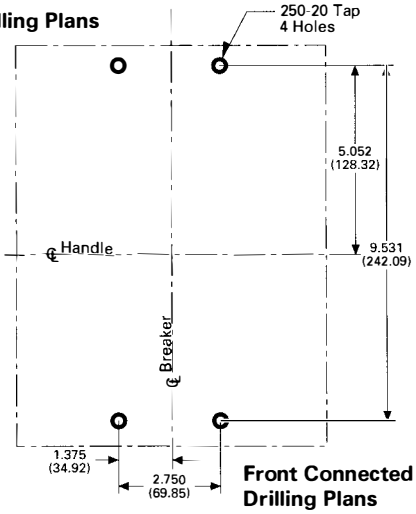

Front Connected Drilling Plans

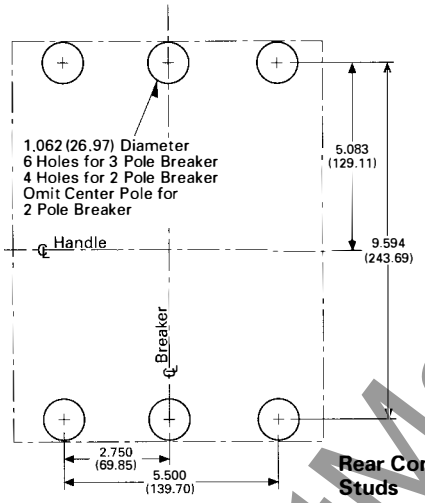

Rear Connected Studs

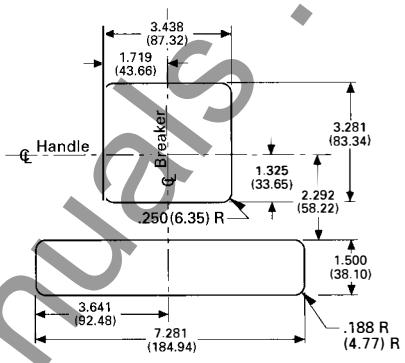

Front Cover Cutout

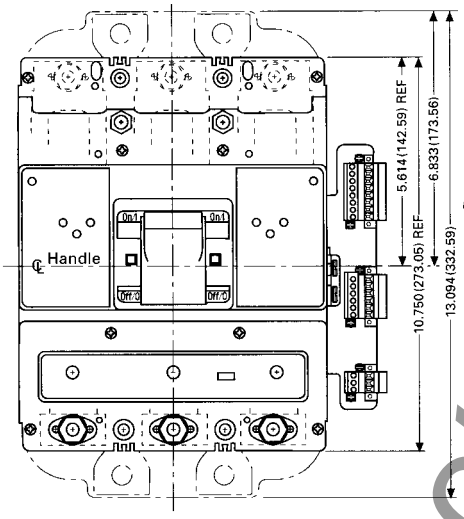

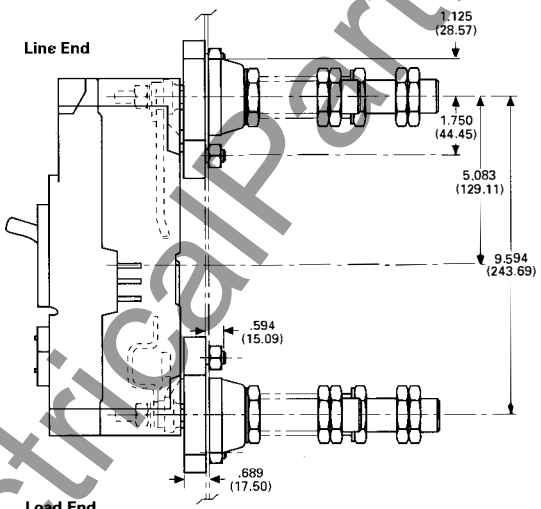

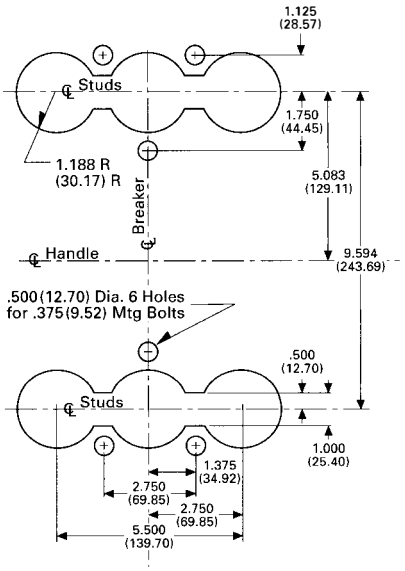

Plug-In Block Mounting Panel

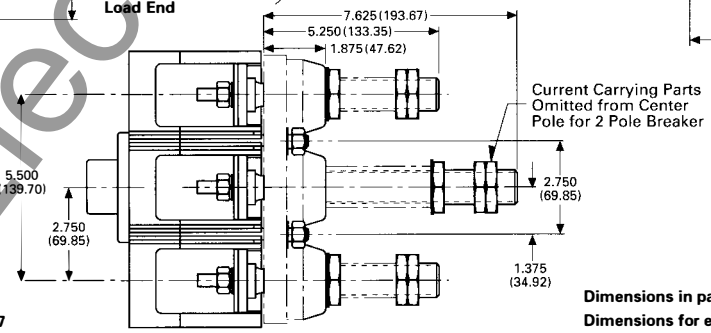

Reproduced from drawings 1493D63 and 1493D67

Dimensions in parentheses in millimeters
Dimensions for estimating purposes only

Cutler-Hammer

Westinghouse & Cutler-Hammer Products
Five Parkway Center
Pittsburgh, Pennsylvania, U.S.A. 15220

Printed in U.S.A.
March 1996

www.ElectricalPartManuals.com

March 1996
New Information
Mailed to: E, D, C/29-100A, 31-400A, 31-500A

N-Frame OPTIM Three-Pole

Westinghouse Series C® Molded Case Circuit Breakers N-Frame 400-1200 Amperes

N-Frame OPTIM Three-Pole Breakers

Front View

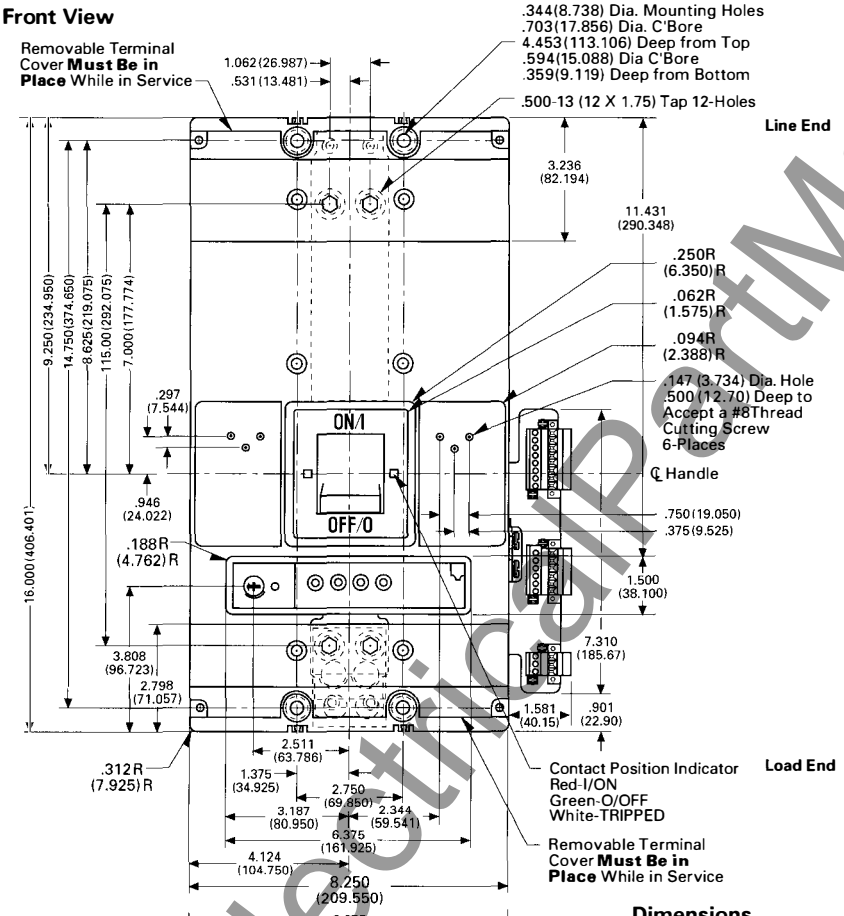

Side View

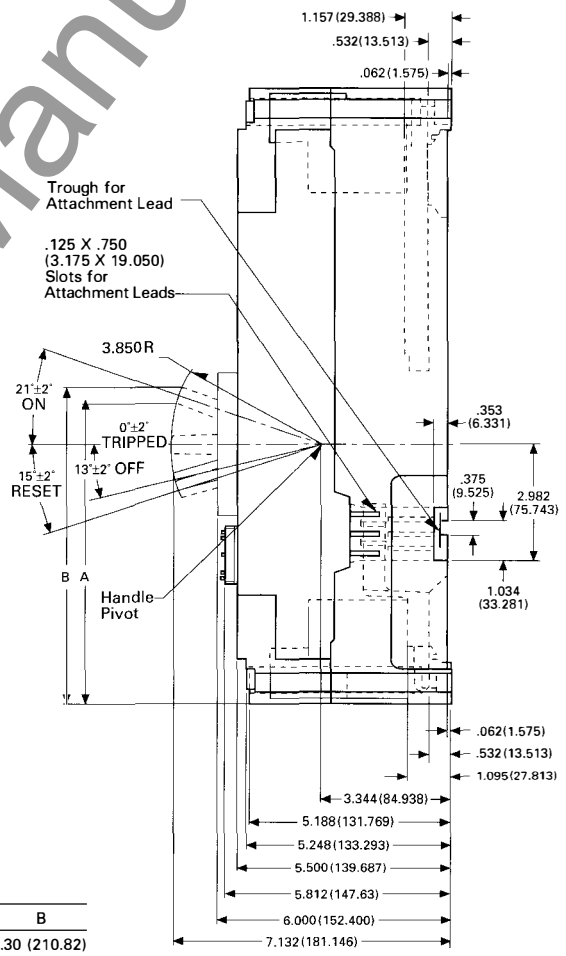

Dimensions

Breaker Status	A	B
ON	7.90 (200.66)	8.30 (210.82)
TRIPPED	6.50 (165.10)	6.90 (175.26)
OFF	5.70 (144.78)	6.10 (154.94)
RESET	5.60 (142.24)	6.00 (152.40)

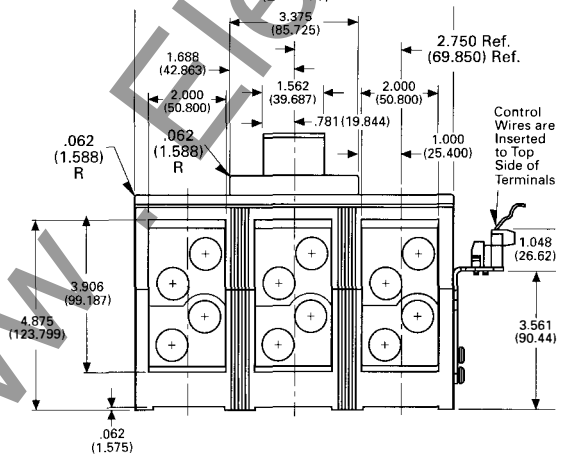

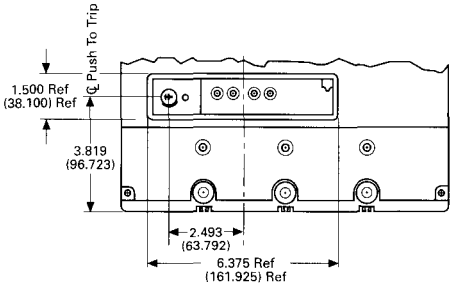

Reproduced from drawing 1484D70

Dimensions in parentheses in millimeters

Dimensions for estimating purposes only

www.ElectricalPartManuals.com

Westinghouse Series C Molded Case Circuit Breakers, N-Frame, 400-1200 Amperes

N-Frame OPTIM Three-Pole Breakers, *Continued*

Drilling Plans

Rear Connected

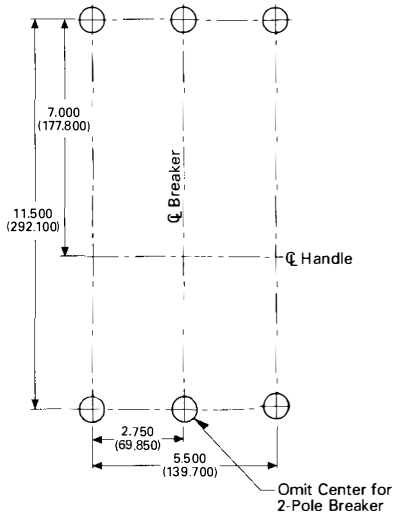

Front Connected

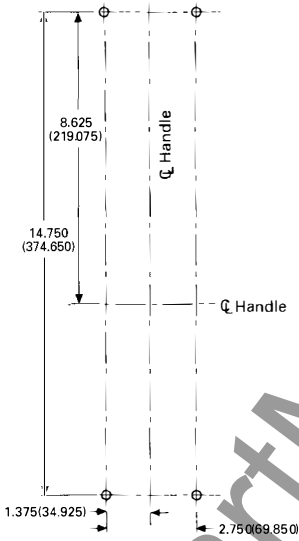

Front Cover Cutout

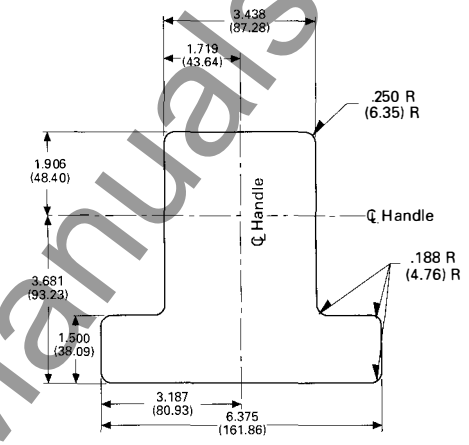

Terminal Extensions for 100% Rating

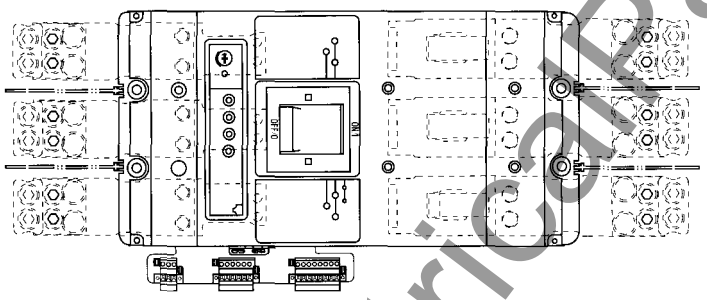

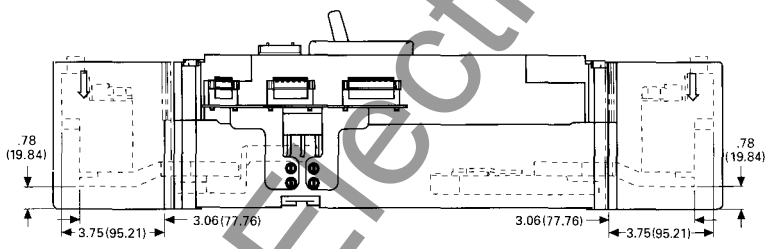

Load End

Line End

Terminal Arrangements

Catalog Number	Wire Range	Number of Cables	Torque Lb-in
Aluminum or Copper Cable			
TA700NB1	#1-500 MCM	2	375
TA1000NB1	3/0-400 MCM	3	375
TA1200NB1	4/0-500 MCM	4	375
TA1201NB1	500-750 MCM	3	450
Copper Cable Only			
T700NB1	2/0-500 MCM	2	300
T1000NB1	3/0-500 MCM	3	300
T1200NB3	3/0-400 MCM	4	275

Drilling Plan for Rear Connecting Studs

Amp Rating	Hole Diameter
700 & 800	1.188 (30.175) Diameter
900-1200	1.312 (33.325) Diameter

Reproduced from drawing 1484D70

Dimensions in parentheses in millimeters

Dimensions for estimating purposes only

Cutler-Hammer
Westinghouse & Cutler-Hammer Products
Five Parkway Center
Pittsburgh, Pennsylvania, U.S.A. 15220

Printed in U.S.A.
March 1996

www.ElectricalPartManuals.com

Westinghouse Series C® Molded Case Circuit Breakers R-Frame 800-2500 Amperes

March 1996
New Information
Mailed to: E, D, C/29-100A, 31-400A, 31-500A

R-Frame OPTIM Three-Pole

R-Frame OPTIM Three-Pole Breakers, 1600 and 2000 Amp Frames

Front View

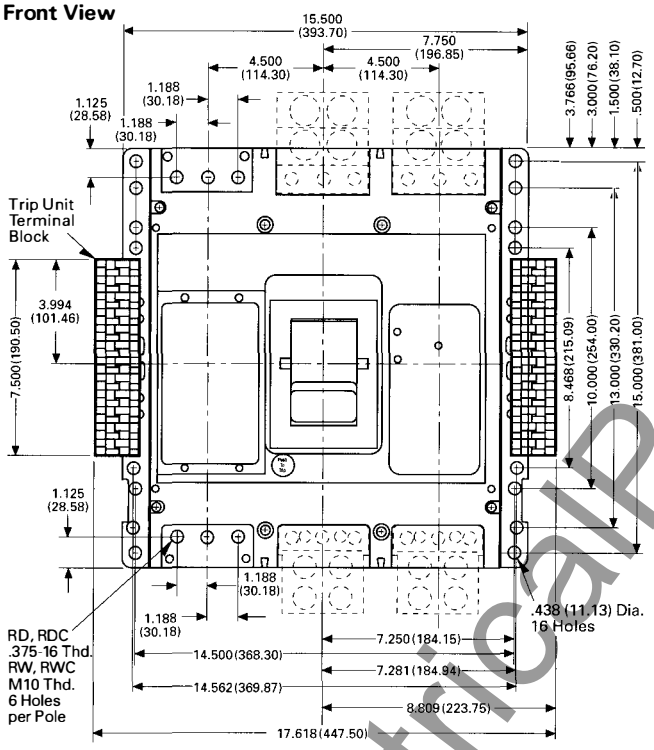

Side View

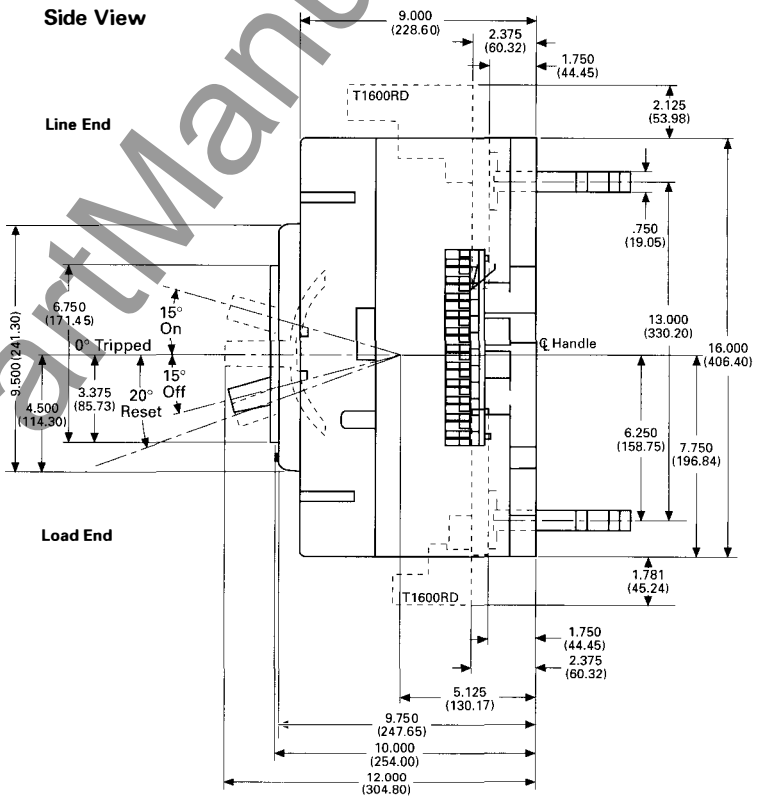

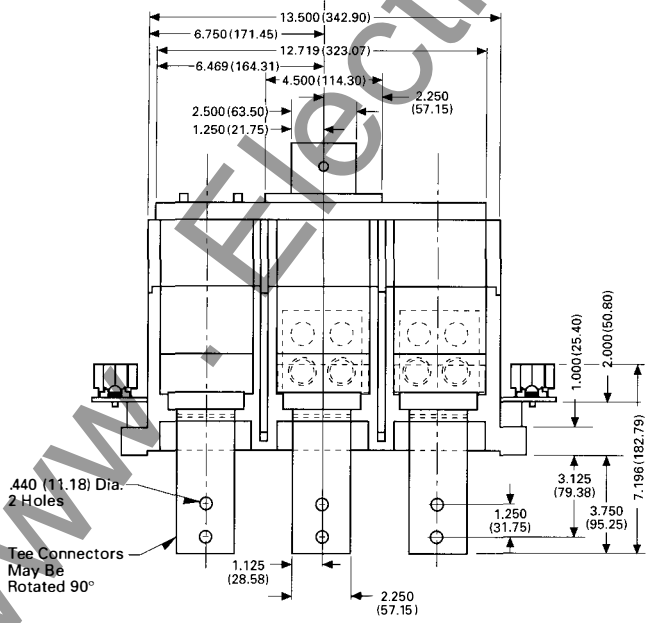

Terminal Arrangements

Terminal Catalog Number	Terminal Material (Body)	Screw Head Type	Wire Range	Wire Type	Torque
T1600RD	Copper	Socket	1-600[4] (50-300[4])	Cu	375 Lb-in. (42.38 Nm)
TA1600RD	Aluminum	Socket	500-1000[4] (300-500[4])	Cu/Al	550 Lb-in. (62.15 Nm)

Reproduced from drawings 1495D63 and 1495D67

Dimensions in parentheses in millimeters

Dimensions for estimating purposes only

www.ElectricalPartManuals.com

Westinghouse Series C® Molded Case Circuit Breakers, R-Frame, 800-2500 Amperes

R-Frame OPTIM Three-Pole Breakers, 2500 Amp Frame, *Continued*

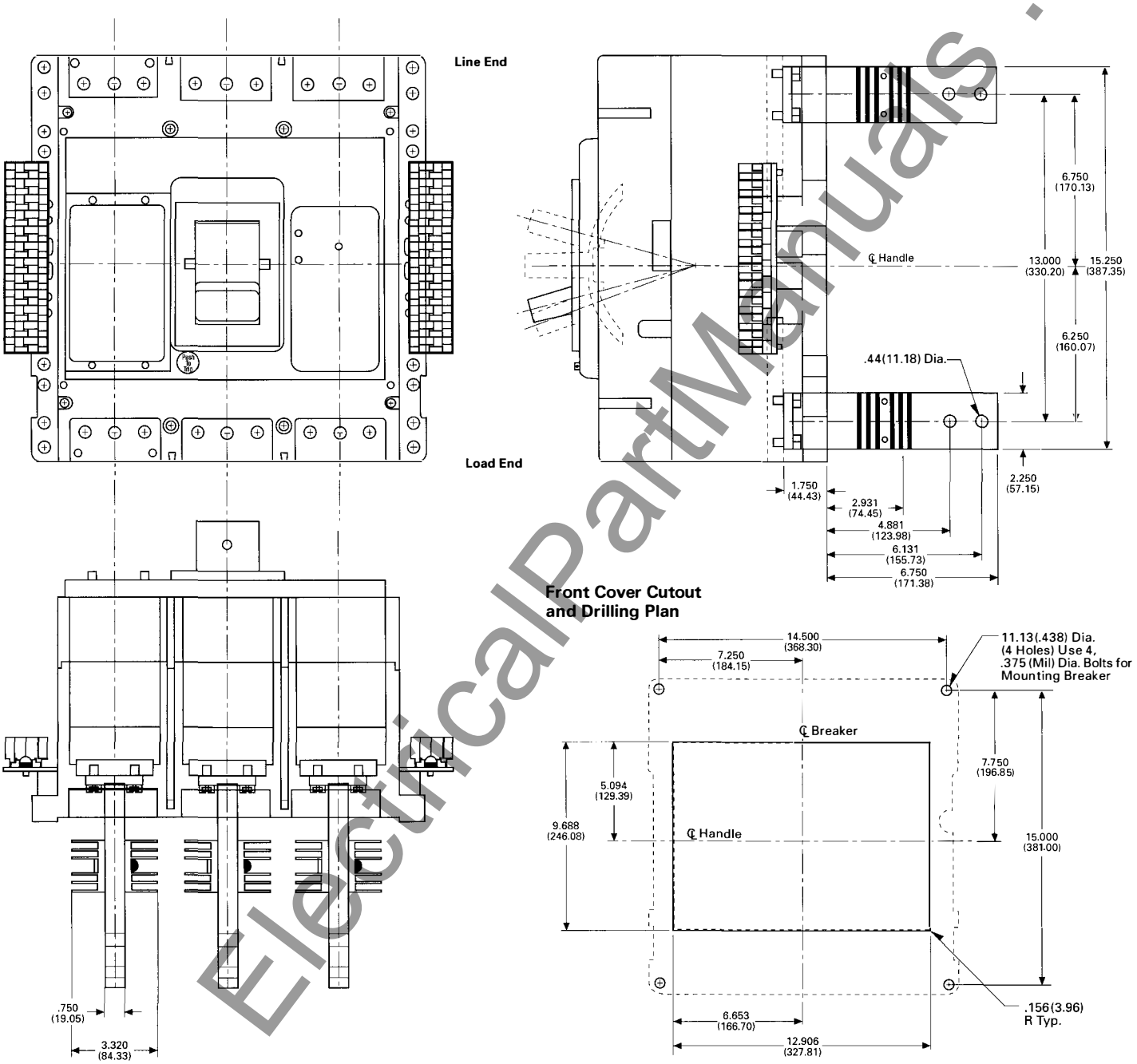

Reproduced from drawings 1495D63 and 1495D67 **Dimensions in parentheses in millimeters** **Dimensions for estimating purposes only**

Cutler-Hammer
Westinghouse & Cutler-Hammer Products
Five Parkway Center
Pittsburgh, Pennsylvania, U.S.A. 15220

Printed in U.S.A.
March 1996

www.ElectricalPartManuals.com

Cutler-Hammer
Westinghouse &
Cutler-Hammer Products
Five Parkway Center
Pittsburgh, Pennsylvania, U.S.A. 15220

April 1995
New Information
Mailed to: E, D, C/29-100A, 31-400A, 31-500A

AB DE-ION® Circuit Breakers

Technical Data 29-120, pages 33-34, dated April 1992 has been superseded by Selection Data 29-120C, pages 1-2, dated March 1995. Please remove from your catalog and files.

Printed in U.S.A.

www . ElectricalPartManuals . com

www . ElectricalPartManuals . com

June 1995
New Information
Mailed to: E, D, C/29-100A, 31-400A, 31-500A

Type GD Circuit Breakers

Page 1: Type GD One-Pole
Page 2: Type GD Two-Pole

Series C® Molded Case Circuit Breakers G-Frame 15-100 Amperes

Type GD One-Pole Only

Terminal, Line and Load Side

Type Terminal	Breaker Amperes	Wire Type and Size
Clamp and Binding Screw	15-20	#14-#10 Cu/Al
Pressure Collar	25-100	#10-1/0 Cu/Al

Suitable for Cable Mounting, Line and Load

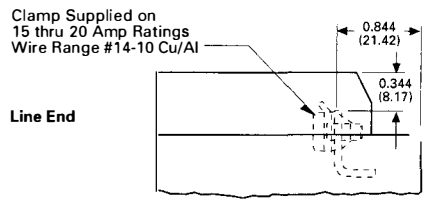

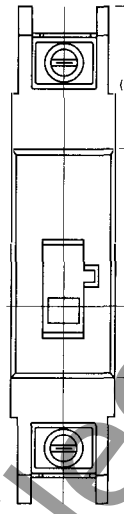

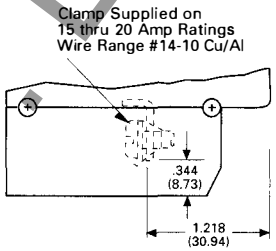

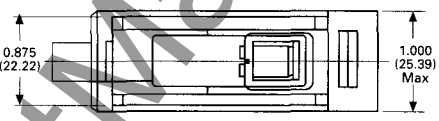

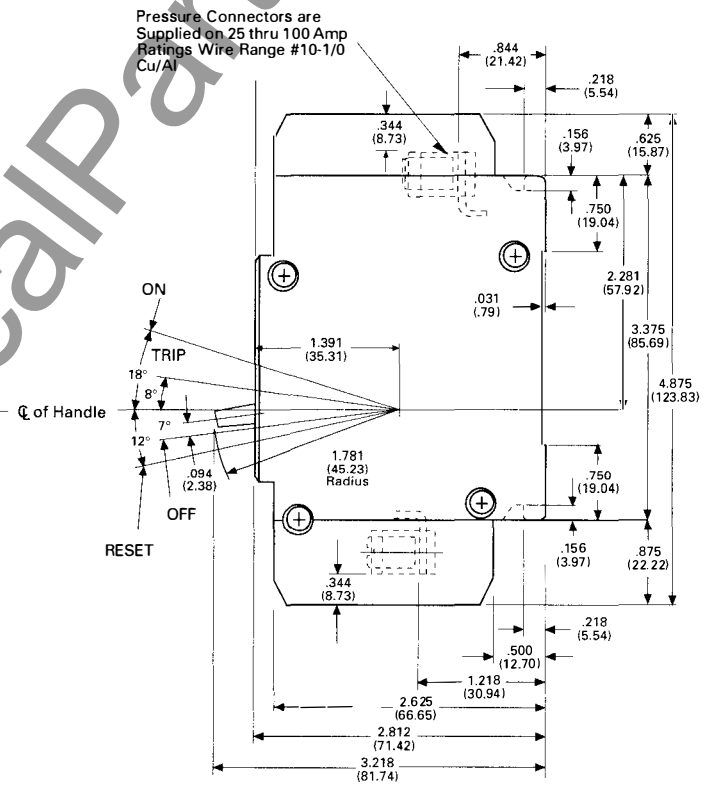

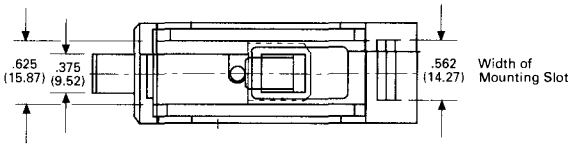

Reproduced from drawing 1374D14

Dimensions in parentheses in millimeters

www.ElectricalPartManuals.com

Series C Molded Case Circuit Breakers, G-Frame, 15-100 Amperes

Type GD Two-Pole Only

Suitable for Cable Mounting, Line and Load

Terminals, Load and Load Side

Type Terminal	Breaker Amperes	Wire Type and Size
Clamp and Binding Screw	15-20	#14-#10 Cu/Al
Pressure Collar	25-100	#10-1/0 Cu/Al

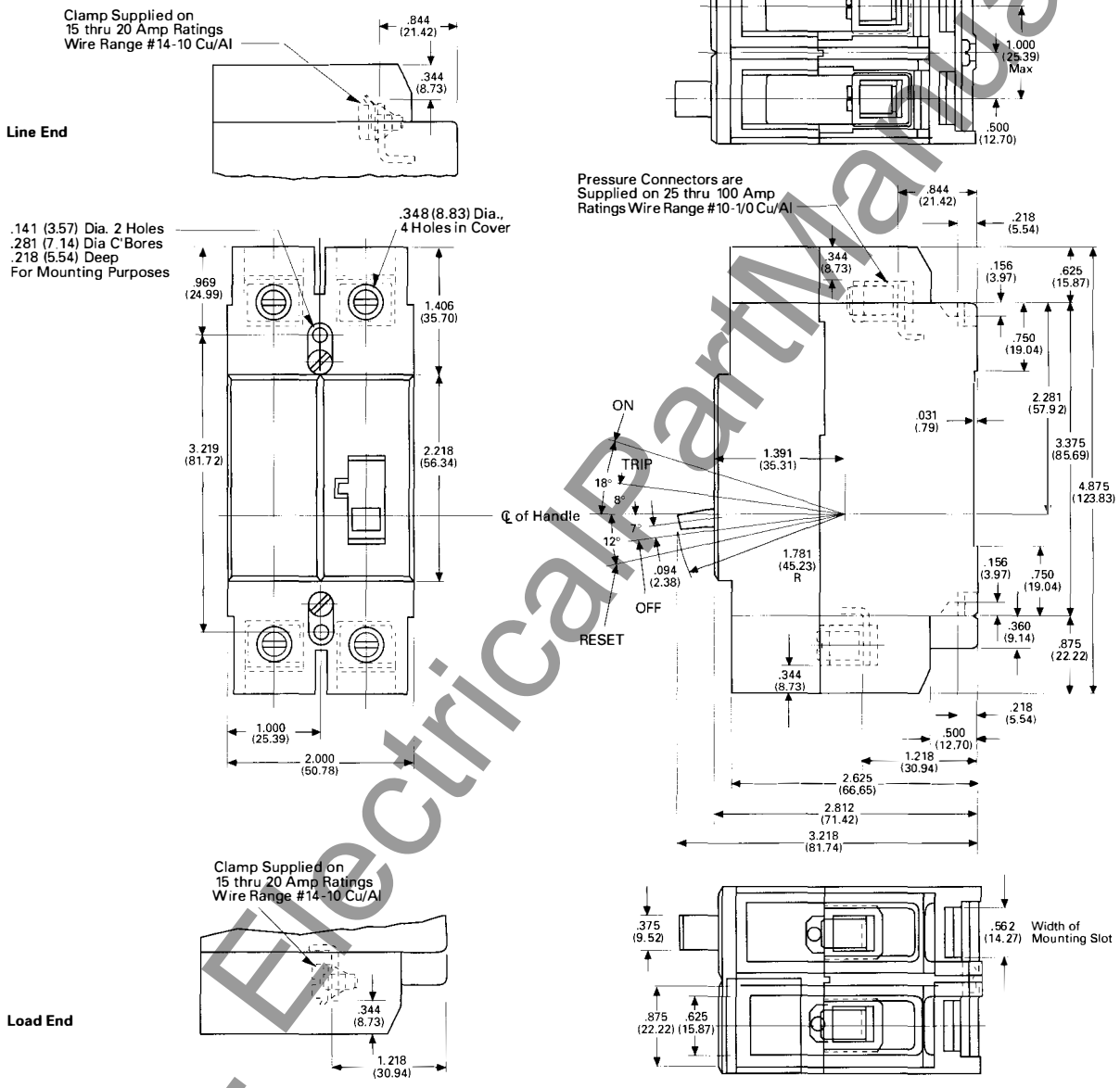

Reproduced from drawing 1374D15

Dimensions in parentheses in millimeters

Cutler-Hammer
Westinghouse & Cutler-Hammer Products
Five Parkway Center
Pittsburgh, Pennsylvania, U.S.A. 15220

Printed in U.S.A.

June 1995

www.ElectricalPartManuals.com

June 1995
New Information
Mailed to: E, D, C/29-100A, 31-400A, 31-500A

Types GD, GDB Bolt-On Panelboard Circuit Breakers

Page 3: Type GD Three-Pole
Page 4: Type GDB Bolt-On One-Pole

Series C® Molded Case Circuit Breakers G-Frame 15-100 Amperes

Type GD Three-Pole Only

Terminals, Load and Load Side

Type Terminal	Breaker Amperes	Wire Type and Size
Clamp and Binding Screw	15-20	#14-#10 Cu/Al
Pressure Collar	25-100	#10-1/0 Cu/Al

Suitable for Cable Mounting, Line and Load

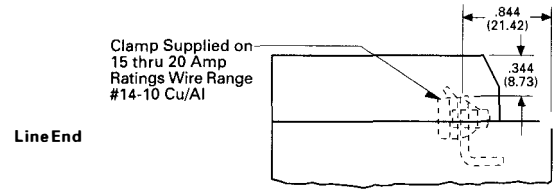

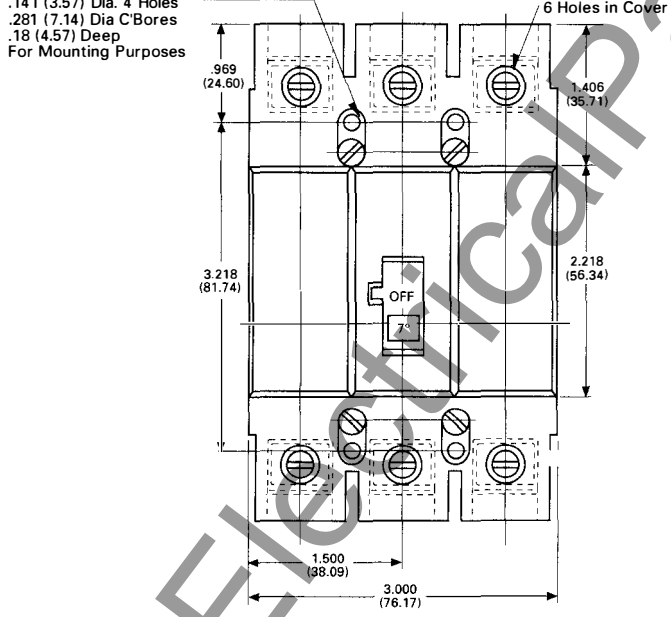

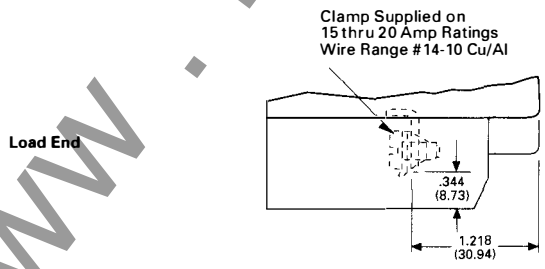

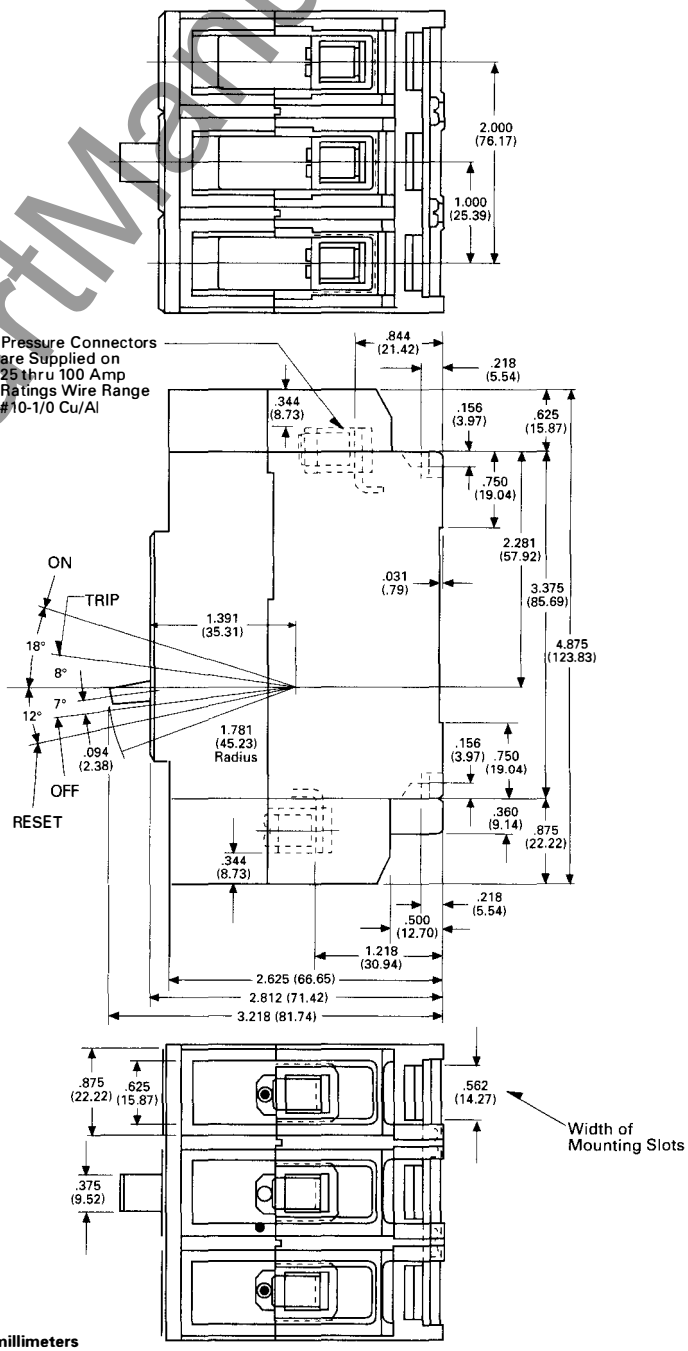

Reproduced from drawing 1374D16

Dimensions in parentheses in millimeters

www . ElectricalPartManuals . com

Series C Molded Case Circuit Breakers, G-Frame, 15-100 Amperes

Type GDB Bolt-On One-Pole Only

Terminals, Load Side Only

Type Terminal	Breaker Amperes	Wire Type and Size
Clamp	15-20	#14-#10 Cu/Al
Pressure	25-100	#10-1/0 Cu/Al

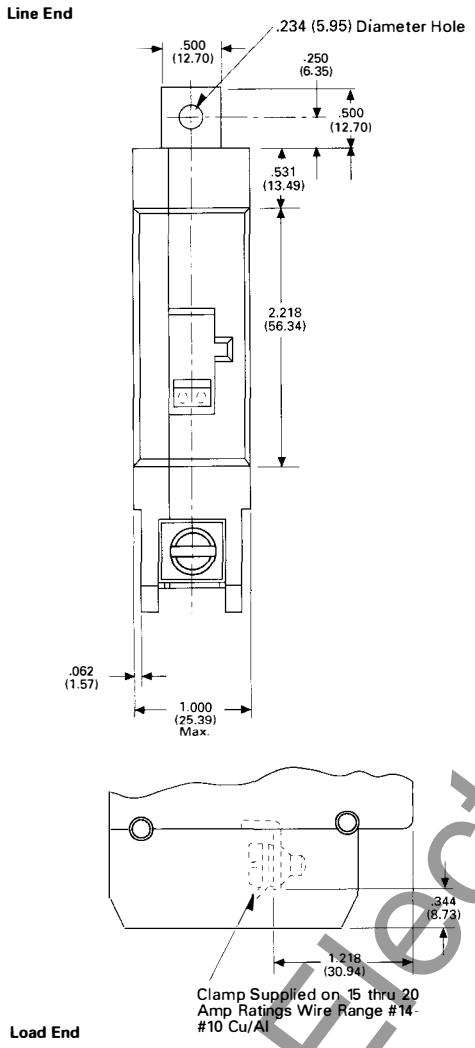

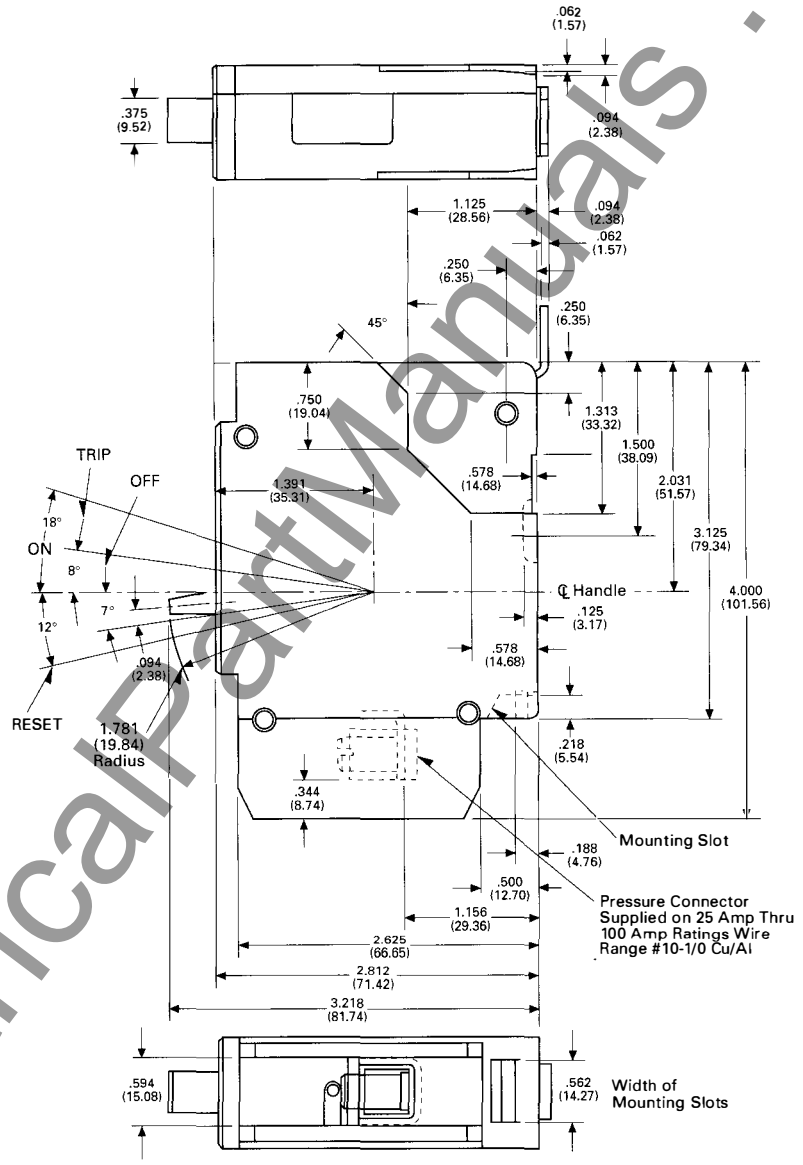

Reproduced from drawing 1372D97

Dimensions in parentheses in millimeters

Cutler-Hammer
Westinghouse & Cutler-Hammer Products
Five Parkway Center
Pittsburgh, Pennsylvania, U.S.A. 15220

Printed in U.S.A.

June 1995

www.ElectricalPartManuals.com

June 1995
New Information
Mailed to: E, D, C/29-100A, 31-400A, 31-500A

Type GDB Bolt-On Panelboard Circuit Breakers

Page 5: Type GDB Bolt-On Two-Pole
Page 6: Type GDB Bolt-On Three-Pole

Series C® Molded Case Circuit Breakers G-Frame 15-100 Amperes

Type GDB Bolt-On Two-Pole Only

Terminals, Load Side Only

Type Terminal	Breaker Amperes	Wire Type and Size
Clamp	15-20	#14-#10 Cu/Al
Pressure	25-100	#10-1/0 Cu/Al

Line End

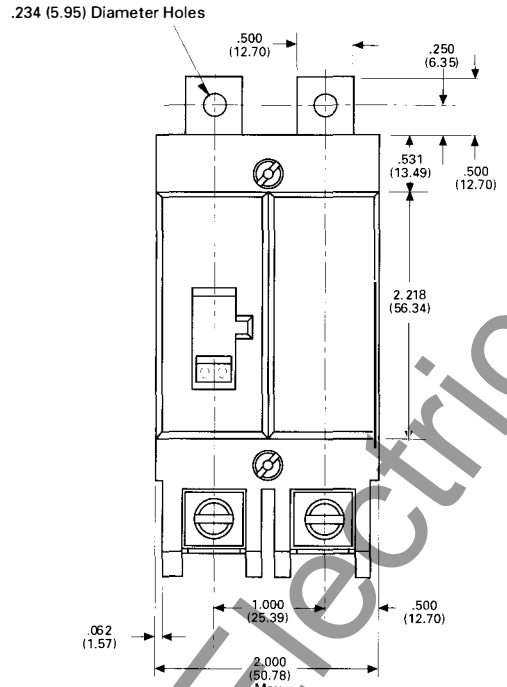

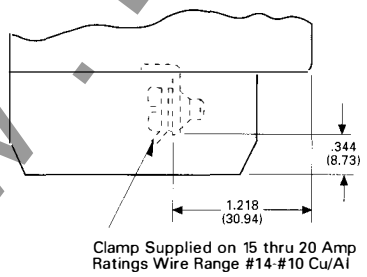

Load End

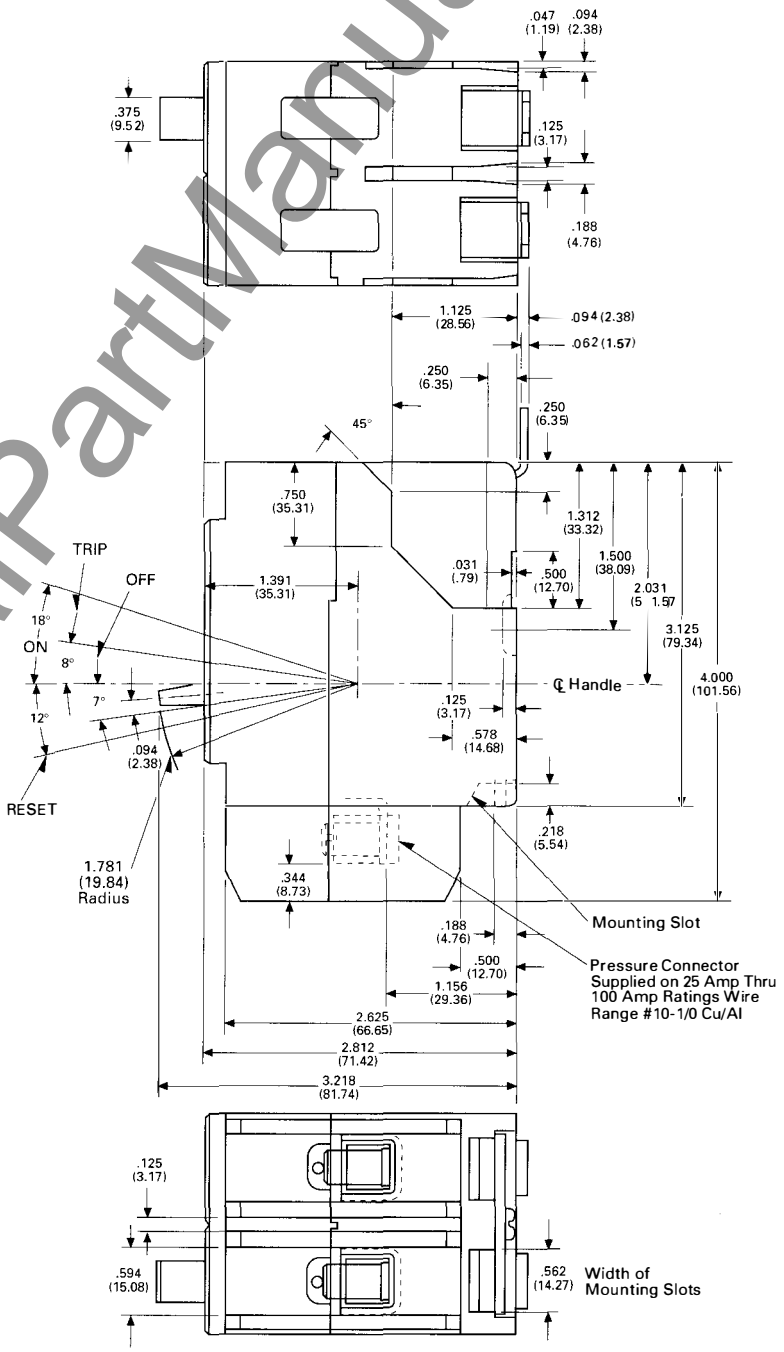

Reproduced from drawing 1373D57

Dimensions in parentheses in millimeters

www.ElectricalPartManuals.com

Series C Molded Case Circuit Breakers, G-Frame, 15-100 Amperes

Type GDB Bolt-On Three-Pole Breakers

Terminals, Load Side Only

Type Terminal	Breaker Amperes	Wire Type and Size
Clamp	15-20	#14-#10 Cu/Al
Pressure	25-100	#10-1/0 Cu/Al

Line End

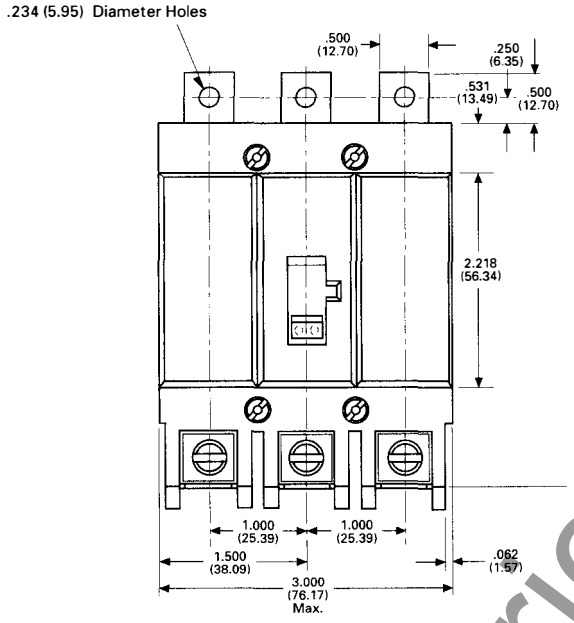

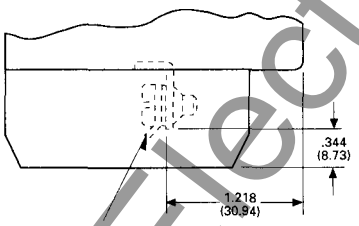

Load End

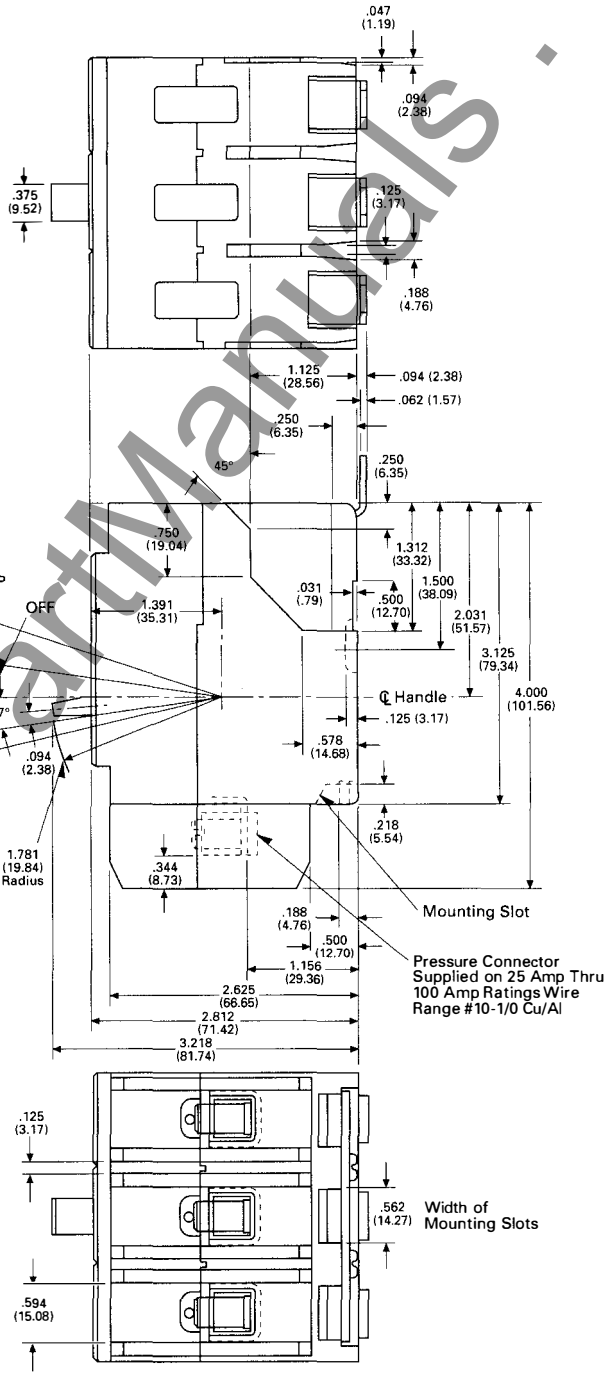

Reproduced from drawing 1370D84

Dimensions in parentheses in millimeters

Cutler-Hammer
Westinghouse & Cutler-Hammer Products
Five Parkway Center
Pittsburgh, Pennsylvania, U.S.A. 15220

Printed in U.S.A.

June 1995

www.ElectricalPartManuals.com

June 1995
New Information
Mailed to: E, D, C/29-100A, 31-400A, 31-500A

Types GC, GHC Circuit Breakers

Page 7: Types GC, GHC One-Pole
Page 8: Types GC, GHC Two-Pole

Series C® Molded Case Circuit Breakers G-Frame 15-100 Amperes

Types GC, GHC One-Pole Only

Terminals, Line and Load Side

Type Terminal	Breaker Amperes	Wire Type and Size
Clamp and Binding Screw	15-20	#14-#10 Cu/Al
Pressure Collar	25-100	#10-1/0 Cu/Al

Suitable for Cable Mounting, Line and Load

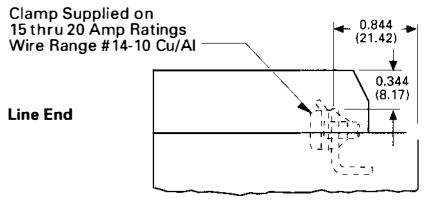

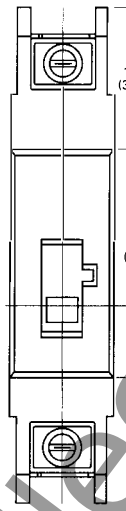

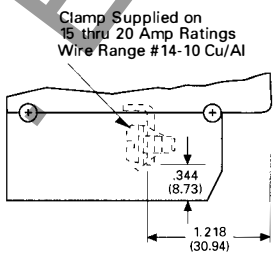

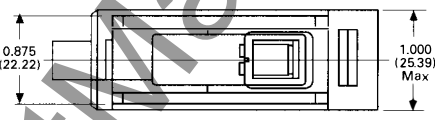

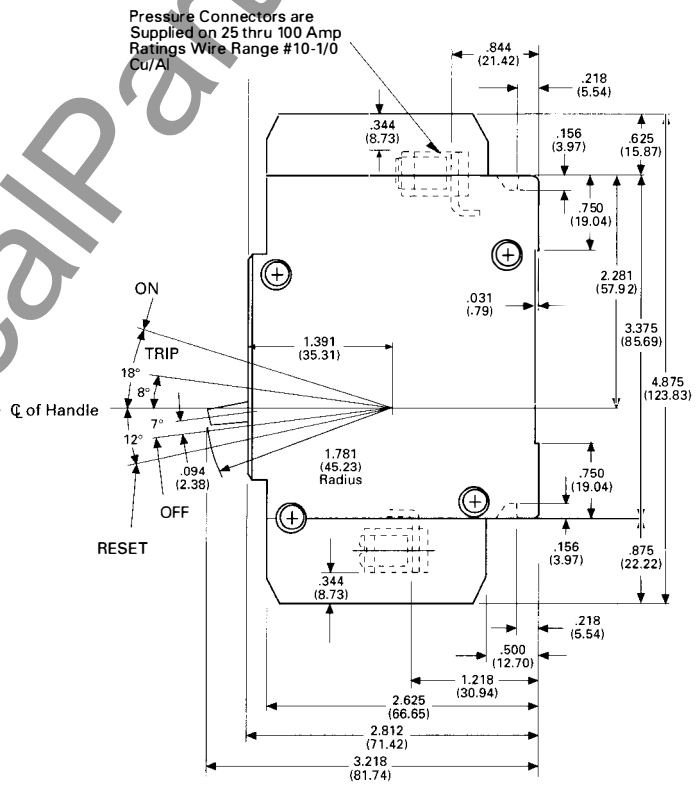

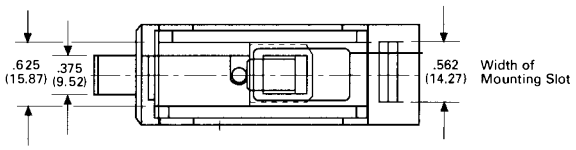

Reproduced from drawing 1374D14

Dimensions in parentheses in millimeters

www.ElectricalPartManuals.com

Series C Molded Case Circuit Breakers, G-Frame, 15-100 Amperes

Types GC, GHC Two-Pole Only

Suitable for Cable Mounting, Line and Load

Terminals, Load and Load Side

Type Terminal	Breaker Amperes	Wire Type and Size
Clamp and Binding Screw	15-20	#14-#10 Cu/Al
Pressure Collar	25-100	#10-1/0 Cu/Al

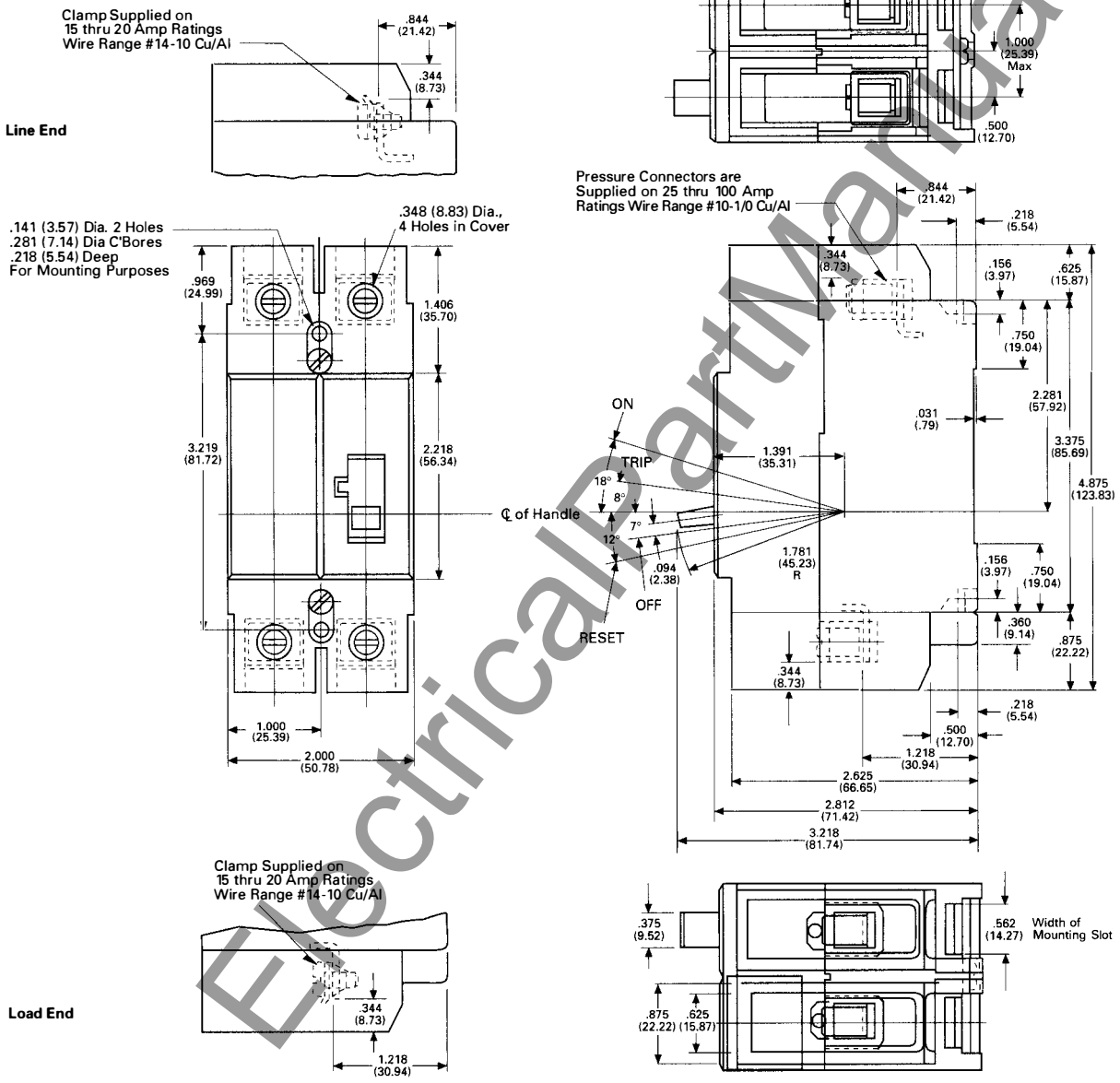

Reproduced from drawing 1374D15

Dimensions in parentheses in millimeters

Cutler-Hammer
Westinghouse & Cutler-Hammer Products
Five Parkway Center
Pittsburgh, Pennsylvania, U.S.A. 15220

Printed in U.S.A.

June 1995

www.ElectricalPartManuals.com

June 1995
New Information
Mailed to: E, D, C/29-100A, 31-400A, 31-500A

Types GC, GHC and GB, GHB
Circuit Breakers

Page 9: Types GC, GHC Three-Pole
Page 10: Types GB, GHB One-Pole

Series C® Molded Case Circuit Breakers G-Frame 15-100 Amperes

Types GC, GHC Three-Pole Only

Terminals, Load and Load Side

Type Terminal	Breaker Amperes	Wire Type and Size
Clamp and Binding Screw	15-20	#14-#10 Cu/Al
Pressure Collar	25-100	#10-1/0 Cu/Al

Suitable for Cable Mounting, Line and Load

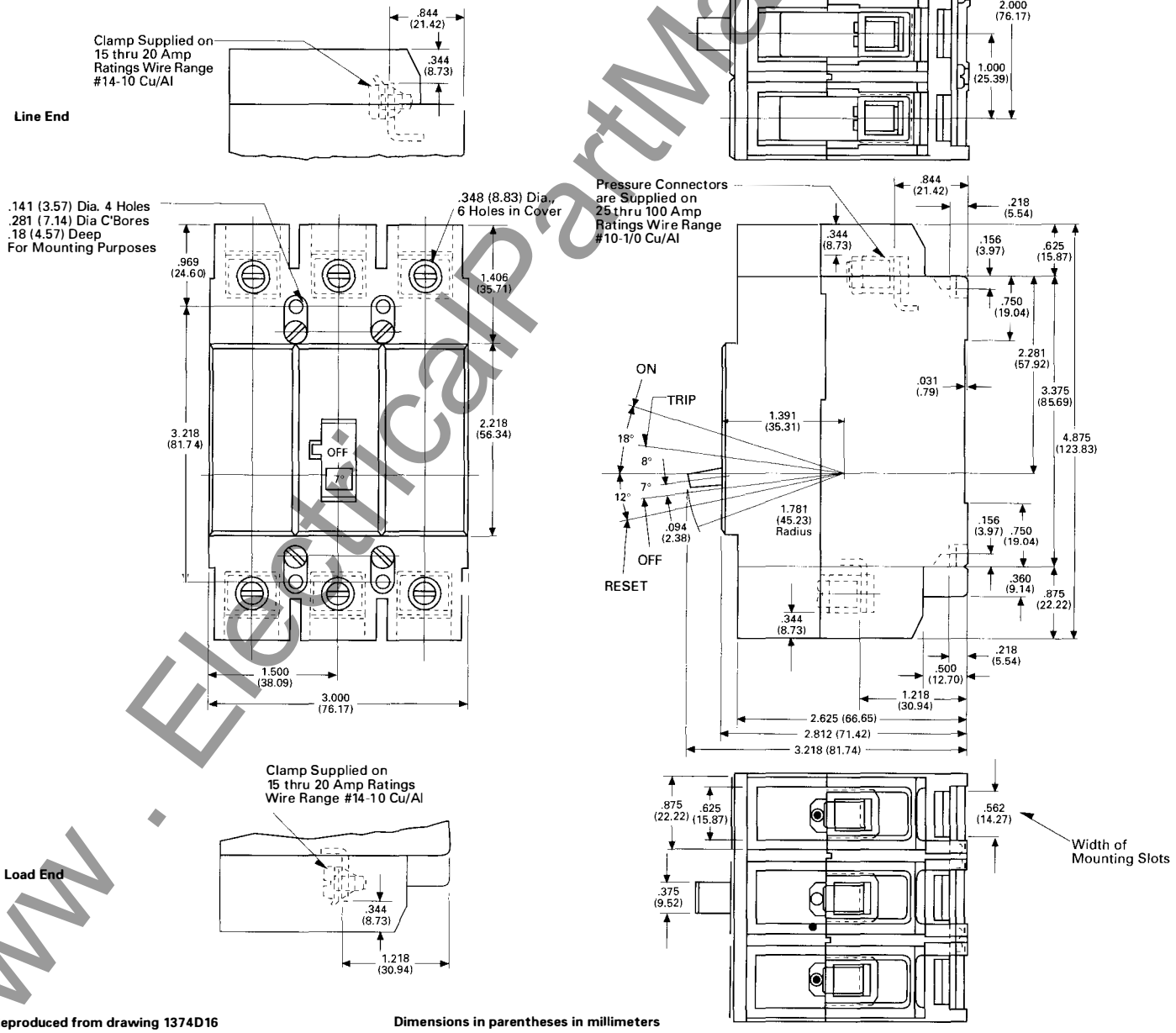

Reproduced from drawing 1374D16

Dimensions in parentheses in millimeters

www . ElectricalPartManuals . com

Series C Molded Case Circuit Breakers, G-Frame, 15-100 Amperes

Types GB, GHB Bolt-On One-Pole Only

Terminals, Load Side Only

Type Terminal	Breaker Amperes	Wire Type and Size
Clamp	15-20	#14-#10 Cu/Al
Pressure	25-100	#10-1/0 Cu/Al

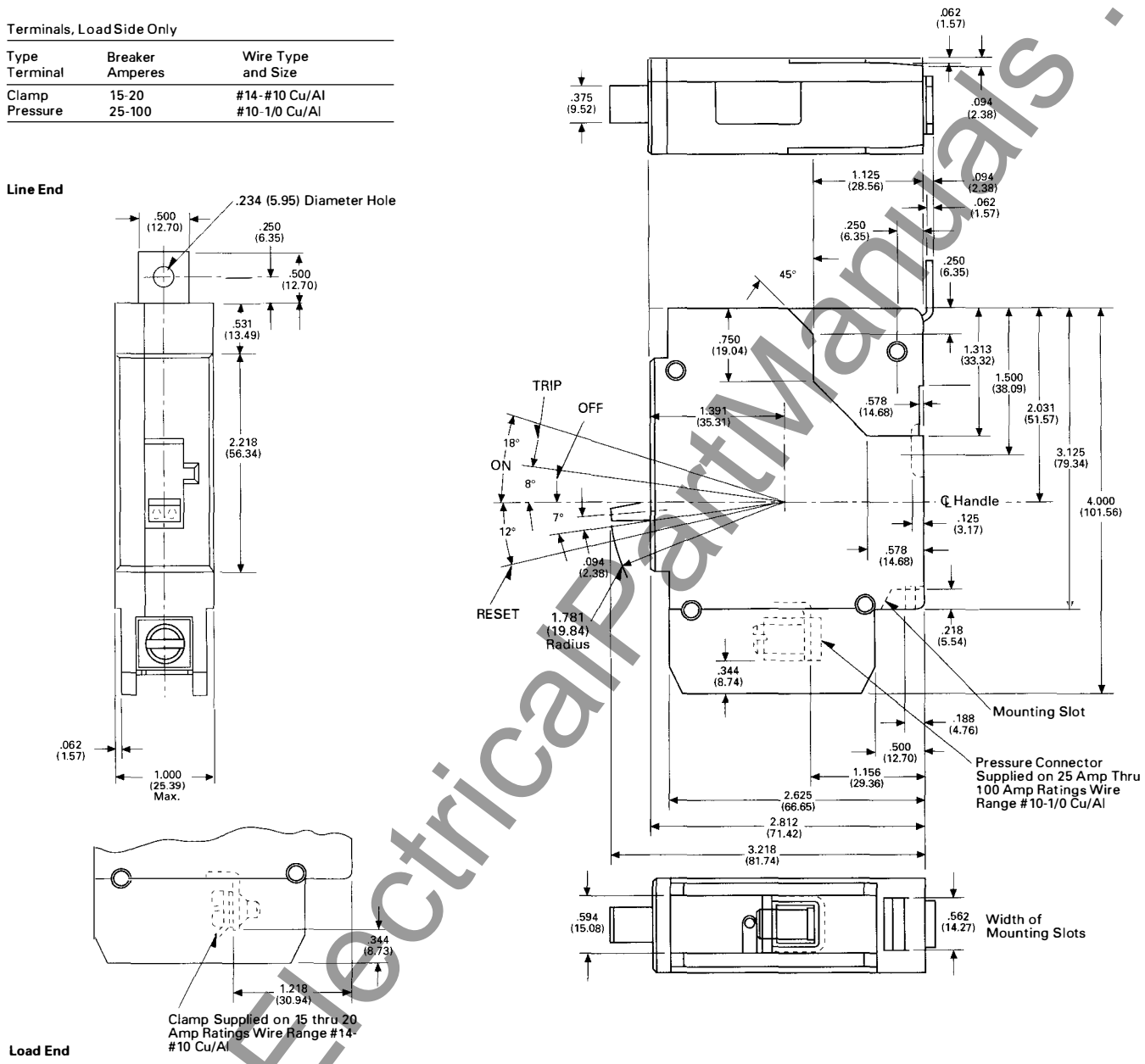

Reproduced from drawing 1372D97 **Dimensions in parentheses in millimeters**

Cutler-Hammer
Westinghouse & Cutler-Hammer Products
Five Parkway Center
Pittsburgh, Pennsylvania, U.S.A. 15220

Printed in U.S.A.

June 1995

www.ElectricalPartManuals.com

June 1995
New Information
Mailed to: E, D, C/29-100A, 31-400A, 31-500A

Types GB, GHB Bolt-On Panelboard Circuit Breakers

Page 11: Types GB, GHB Bolt-On Two-Pole
Page 12: Types GB, GHB Bolt-On Three-Pole

Series C® Molded Case Circuit Breakers G-Frame 15-100 Amperes

Types GB, GHB Bolt-On Two-Pole Only

Terminals, Load Side Only

Type Terminal	Breaker Amperes	Wire Type and Size
Clamp	15-20	#14-#10 Cu/Al
Pressure	25-100	#10-1/0 Cu/Al

Line End

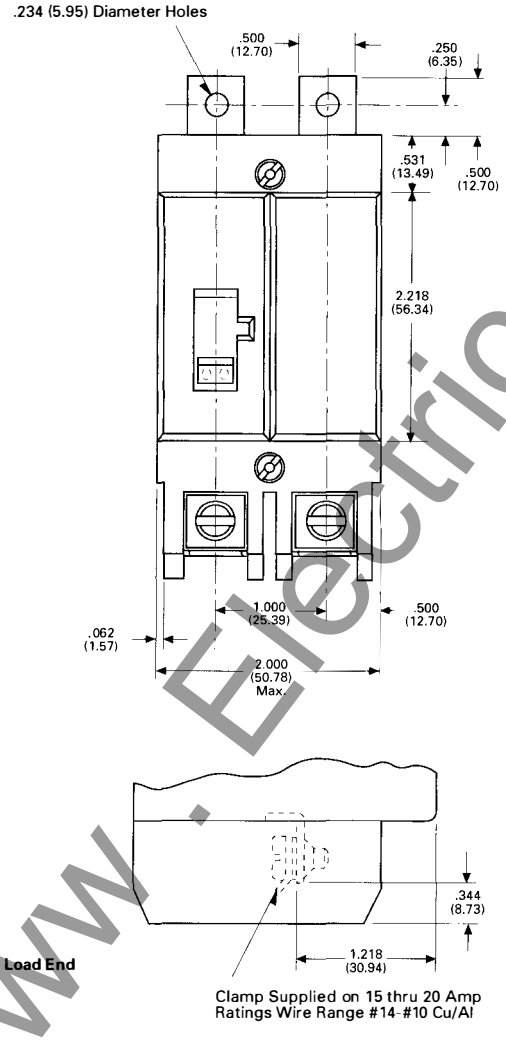

Load End

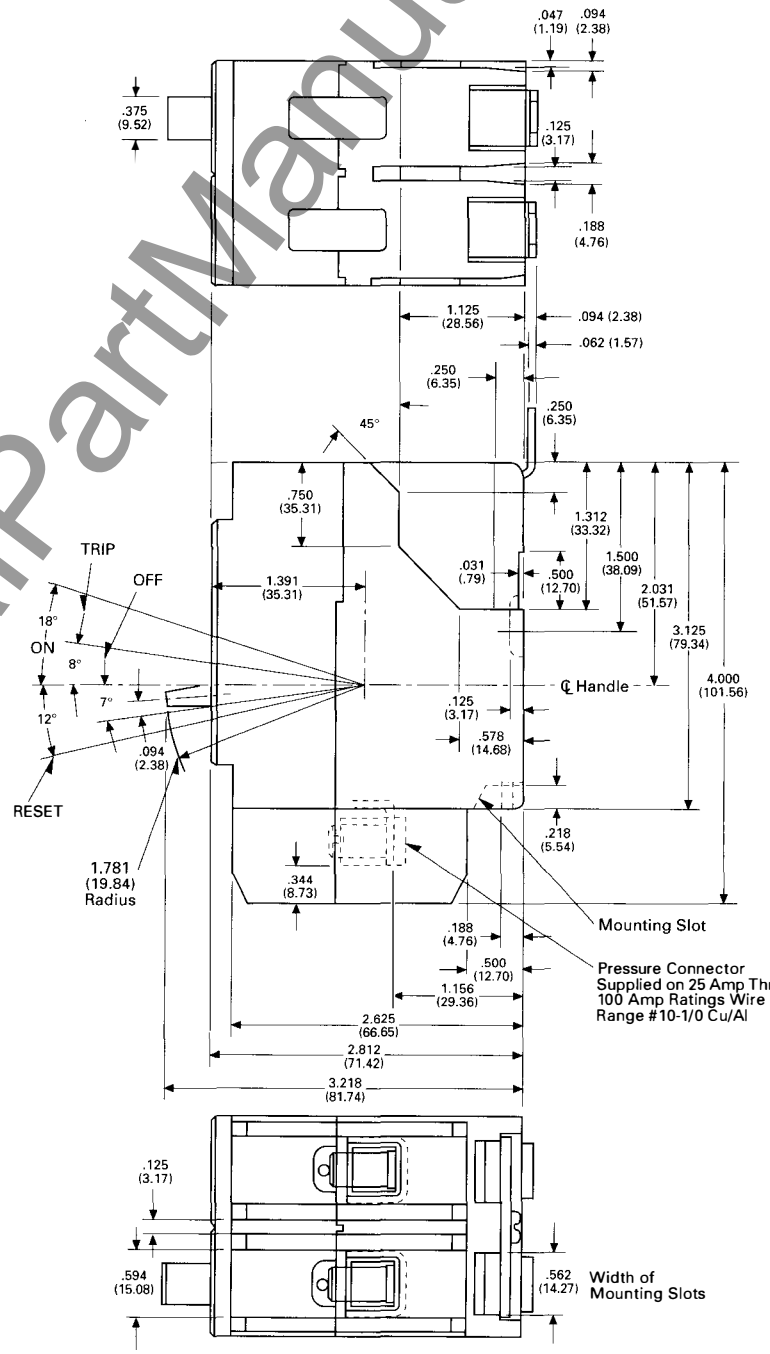

Reproduced from drawing 1373D57

Dimensions in parentheses in millimeters

www.ElectricalPartManuals.com

Series C Molded Case Circuit Breakers, G-Frame, 15-100 Amperes

Types GB, GHB Bolt-On Three-Pole Breakers

Terminals, Load Side Only

Type Terminal	Breaker Amperes	Wire Type and Size
Clamp	15-20	#14-#10 Cu/Al
Pressure	25-100	#10-1/0 Cu/Al

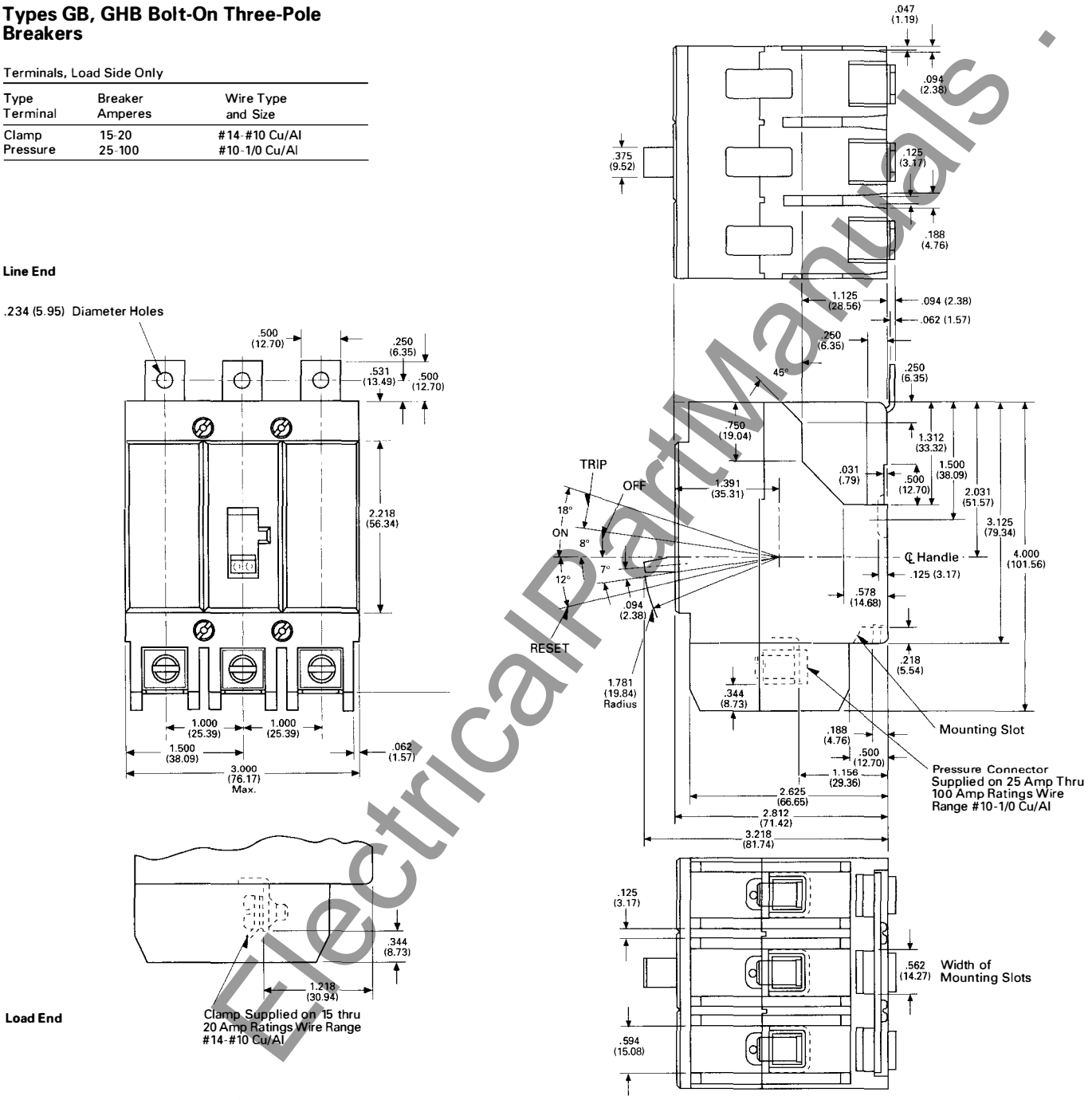

Reproduced from drawing 1370D84

Dimensions in parentheses in millimeters

Cutler-Hammer
Westinghouse & Cutler-Hammer Products
Five Parkway Center
Pittsburgh, Pennsylvania, U.S.A. 15220

www.ElectricalPartManuals.com

July 1996
New Information
Mailed to: E, D, C/29-100A

Series C® HMCP Motor Circuit Protectors 3-600 Amperes

F-Frame

Front View

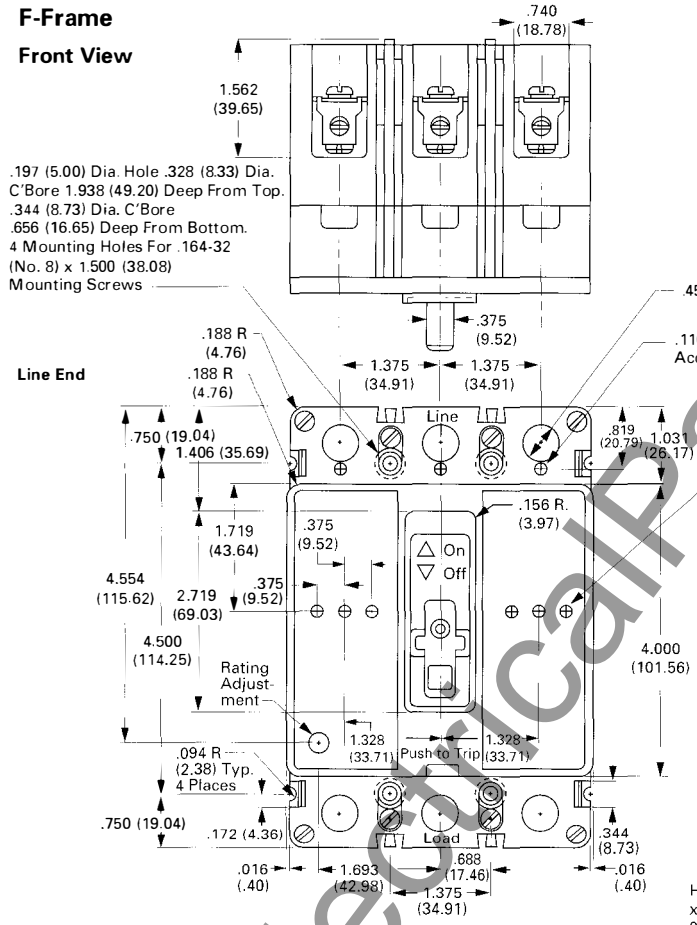

Side View

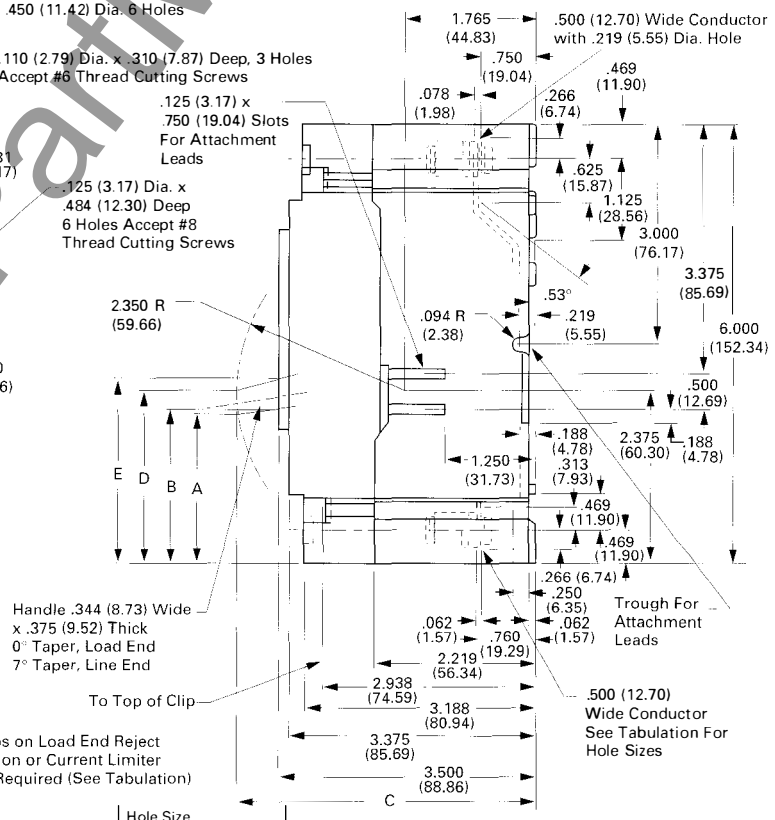

Load End

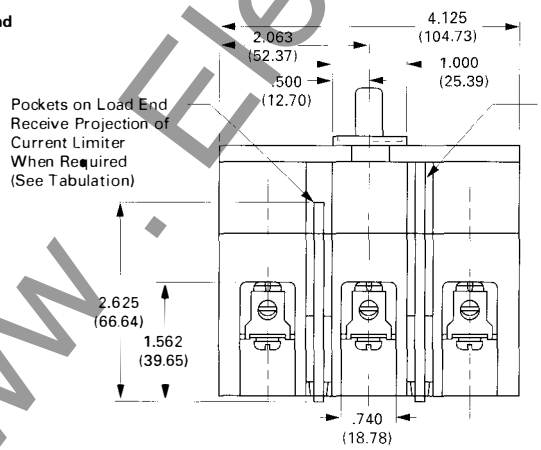

MCP Continuous Rating	Hole Size .203 (5.15)	.234 (5.94)	.266 (6.75)	Current Limiter Pockets
3	X			N
5	X			N
7	X			N
10	X			Y
15	X			Y
25		X		N
30		X		N
50		X		Y
70		X		Y
100			X	N
150			X	Y

Breaker Status	Dimension A	B	C	D	E
On	3.07 (77.94)	2.92 (74.13)	3.96 (100.54)	3.40 (86.32)	3.33 (84.54)
Tripped	2.65 (67.28)	2.57 (65.25)	4.06 (103.08)	2.99 (75.91)	2.98 (75.66)
Off	2.08 (52.81)	2.14 (54.33)	4.12 (104.60)	2.42 (61.44)	2.56 (64.99)
Reset	1.98 (50.27)	2.05 (52.04)	4.11 (104.35)	2.30 (58.39)	2.48 (62.96)

Note: For 2 Pole MCP, Current Carrying Parts Omitted From Center Pole

Reproduced from drawing 1490D54

Dimensions in parentheses in millimeters

www.ElectricalPartManuals.com

Series C HMCP Motor Circuit Protectors, 3-600 Amperes

F-Frame

Front Cover Cutout

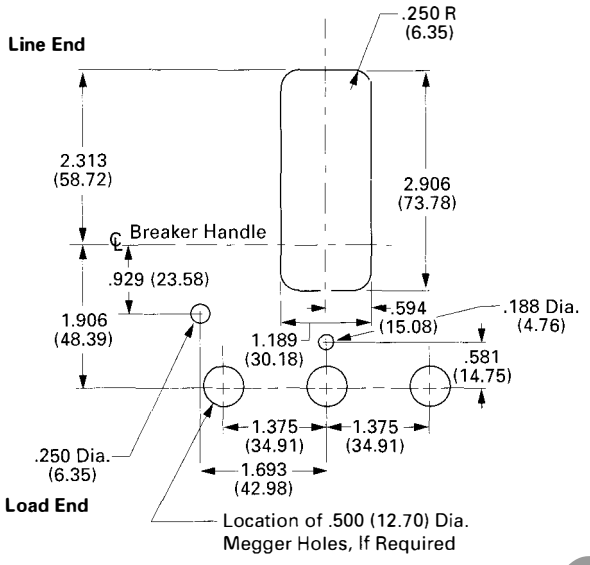

Drilling Plans

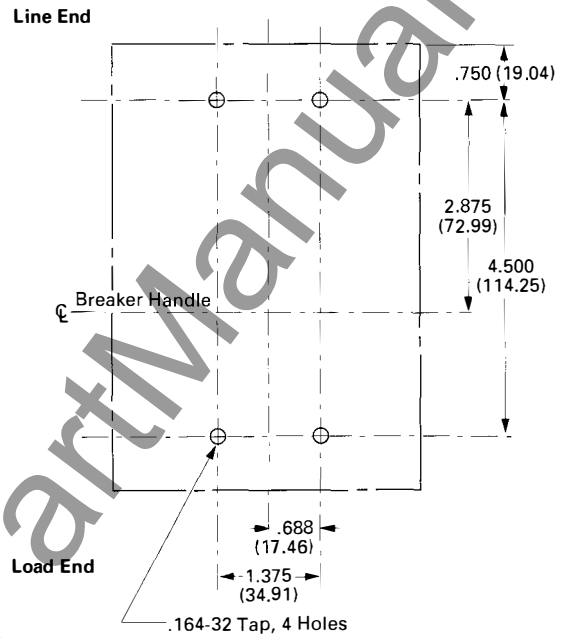

Reproduced from drawing 1490D54 **Dimensions in parentheses in millimeters**

Cutler-Hammer
Westinghouse & Cutler-Hammer Products
Five Parkway Center
Pittsburgh, Pennsylvania, U.S.A. 15220

Printed in U.S.A.
July 1996

www.ElectricalPartManuals.com

July 1996
New Information
Mailed to: E, D, C/29-100A

Series C® HMCP Motor Circuit Protectors 3-600 Amperes

J-Frame

Front View

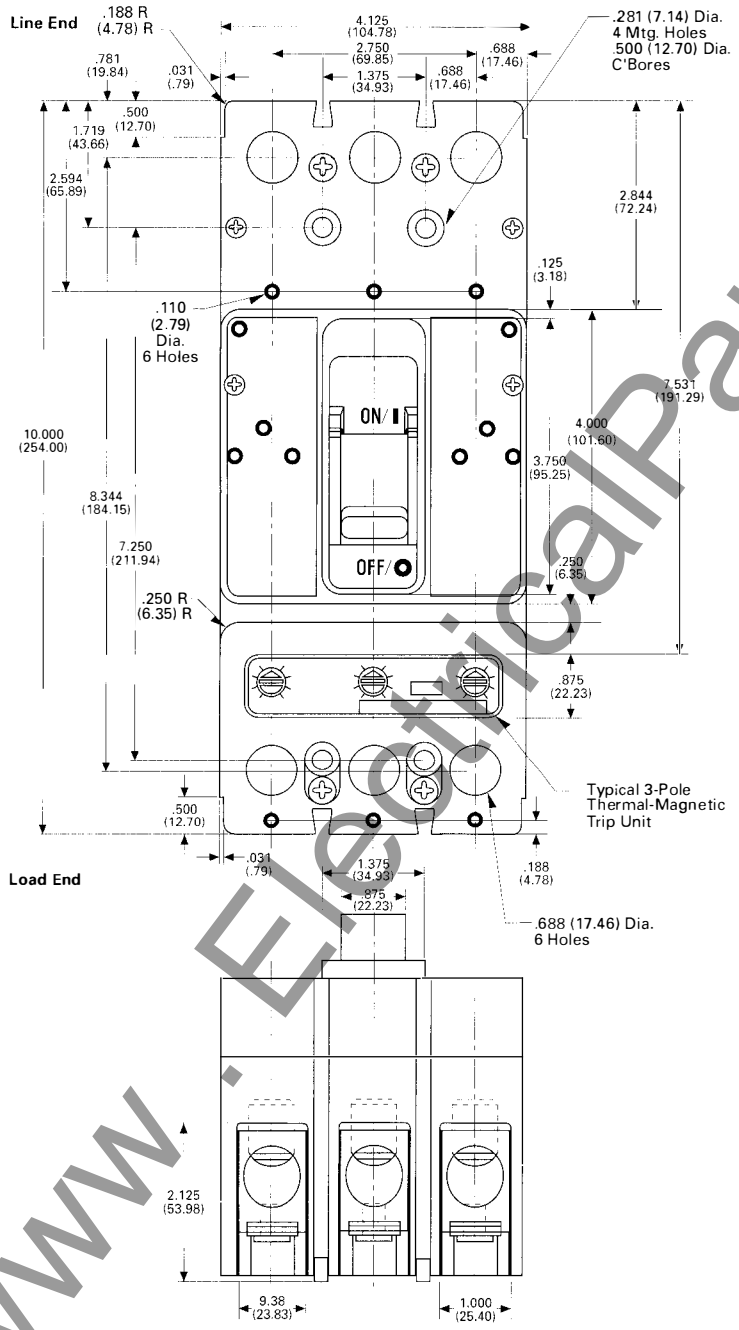

Side View

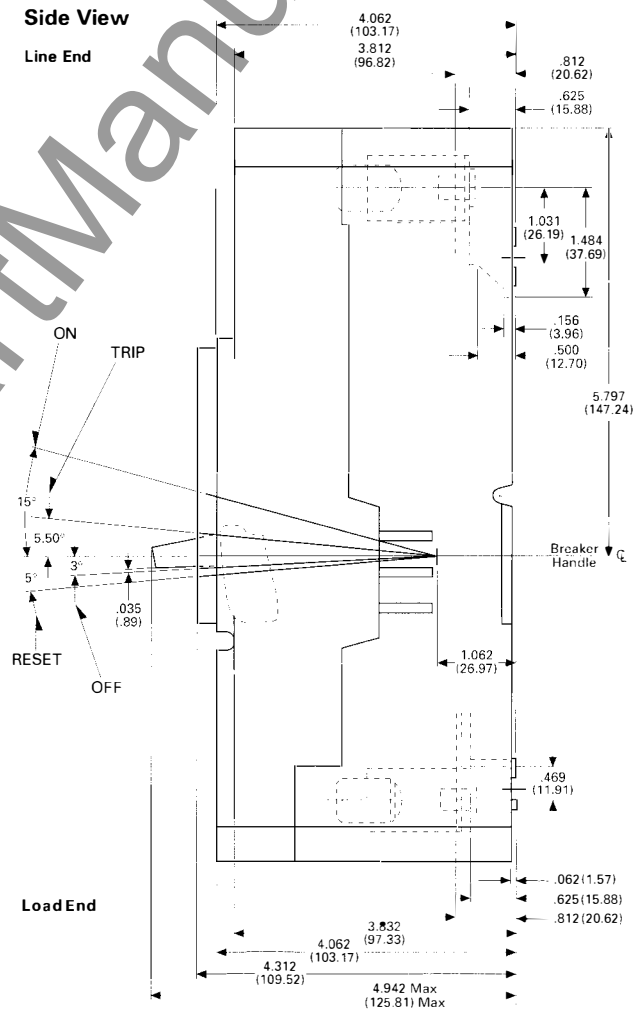

Reproduced from drawings 1491D63 and 1491D67

Dimensions in parentheses in millimeters

www.ElectricalPartManuals.com

Series C HMCP Motor Circuit Protectors, 3-600 Amperes

J-Frame

Drilling Plans

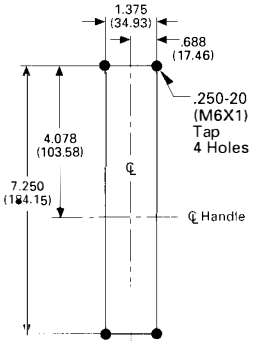

Breaker Mounting

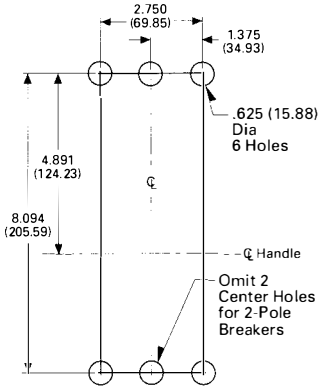

Rear Connecting Studs

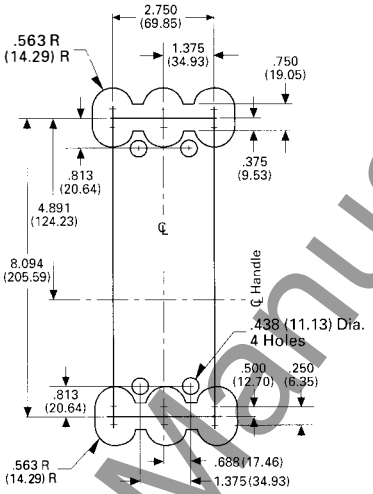

Drawout Support Blocks

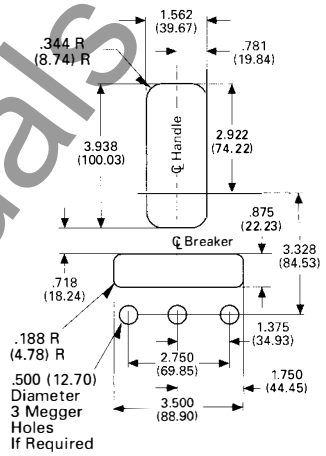

Front Cover Cutout

Breaker Shown in OFF Position

Line End

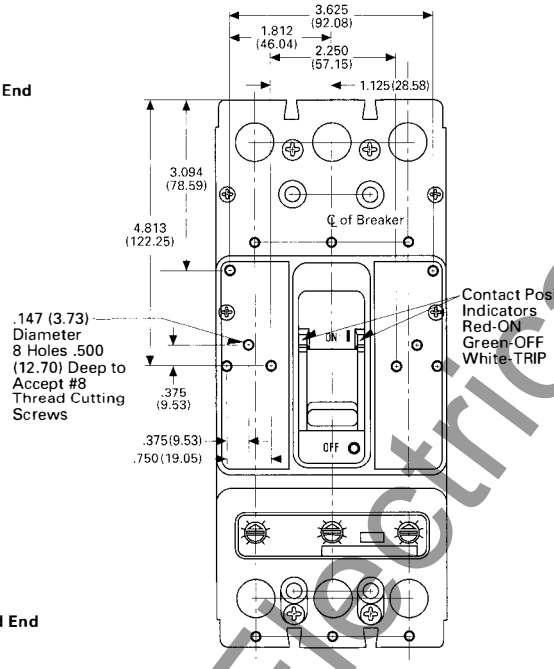

Load End

Line End

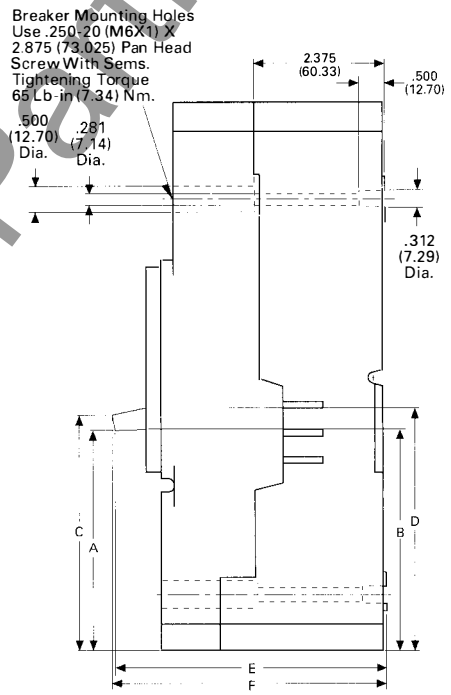

Load End

Reproduced from drawings 1491D65 and 1491D67

Breaker Status	Dimension A	B	C	D	E	F	Hdl. Oper. Force
On	5.24 (132.10)	5.12 (130.05)	5.54 (140.72)	5.49 (139.45)	4.77 (121.56)	4.72 (119.89)	32 Lb. (142.3 Nm)
Tripped	4.79 (121.67)	4.71 (119.63)	5.10 (129.54)	5.10 (129.54)	4.87 (123.70)	4.85 (123.19)	
Off	4.02 (102.11)	4.06 (103.12)	4.33 (109.82)	4.45 (113.03)	4.91 (124.71)	4.95 (125.73)	22 Lb. (97.9 Nm)
Reset	3.91 (99.31)	3.96 (100.58)	4.21 (106.93)	4.36 (110.74)	4.90 (124.46)	4.95 (125.73)	38 Lb. (169.0 Nm)

Dimensions in parentheses in millimeters

Cutler-Hammer
Westinghouse & Cutler-Hammer Products
Five Parkway Center
Pittsburgh, Pennsylvania, U.S.A. 15220

www.ElectricalPartManuals.com

July 1996
New Information
Mailed to: E, D, C/29-100A

Series C® HMCP Motor Circuit Protectors 3-600 Amperes

K-Frame

Front View

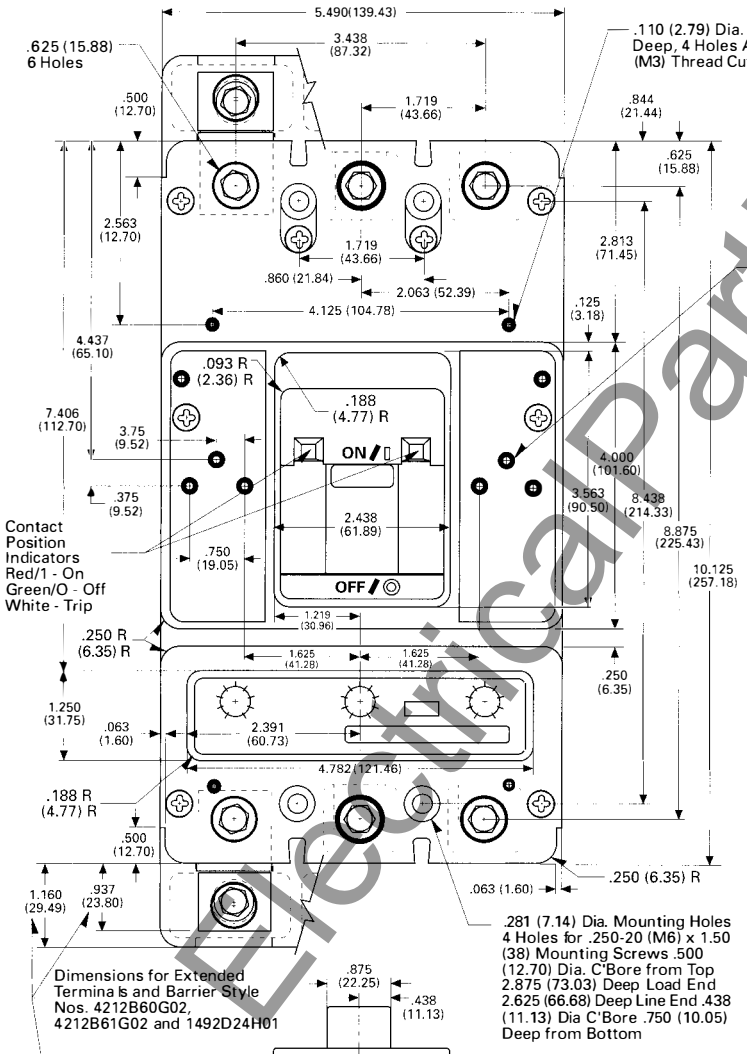

Side View

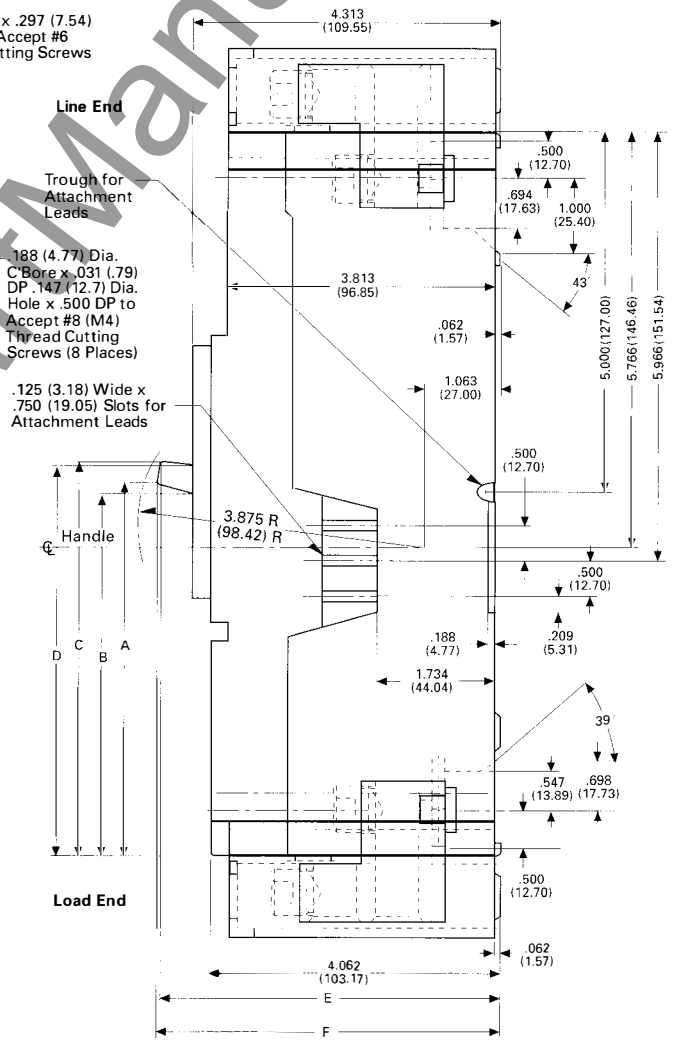

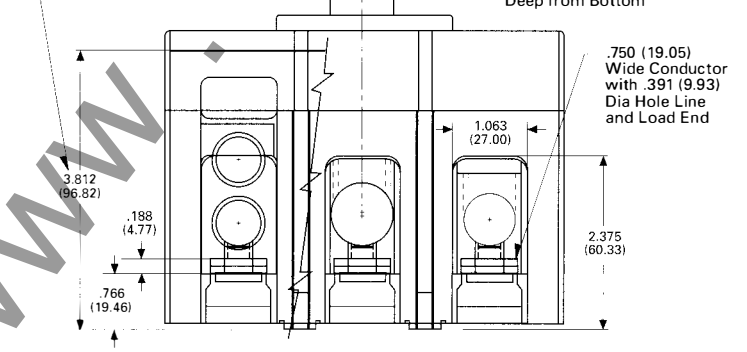

Breaker Status	Dimensions A	B	C	D	E	F	Handle Force①
On	5.39 (136.9)	5.20 (132.1)	5.69 (144.5)	5.61 (142.5)	4.72 (119.9)	4.77 (121.2)	30 lbs. (13.61 kgs.)
Tripped	4.77 (121.2)	4.69 (119.1)	5.08 (129.0)	5.11 (129.8)	4.89 (124.2)	4.89 (124.2)	—
Off	4.16 (105.7)	4.21 (106.9)	4.46 (113.3)	4.64 (117.9)	4.95 (125.7)	4.91 (124.7)	25 lbs. (11.34 kgs.)
Reset	4.07 (103.4)	4.14 (105.2)	4.57 (116.1)	4.56 (115.8)	4.95 (125.7)	4.90 (124.5)	35 lbs. (15.87 kgs.)

① All handle forces measured approximately 0.125 (3.17) from top of handle.

Reproduced from drawings 1492D63 and 1492D67
Dimensions in parentheses in millimeters

www.ElectricalPartManuals.com

Series C HMCP Motor Circuit Protectors, 3-600 Amperes

K-Frame
Drilling Plans

Rear Connected Studs

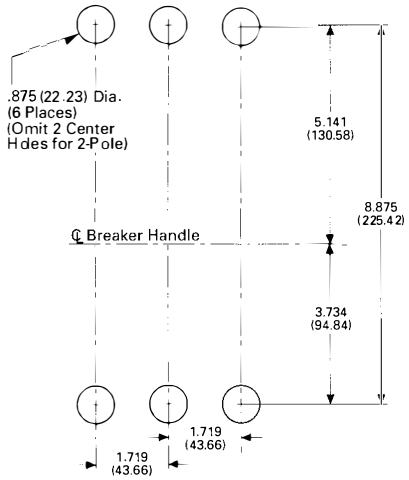

Front Connected Terminals

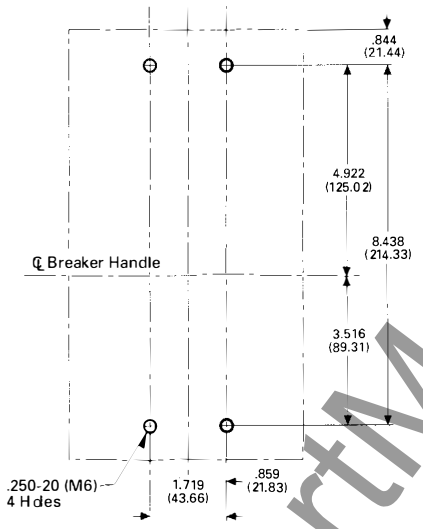

Front Cover Cutout

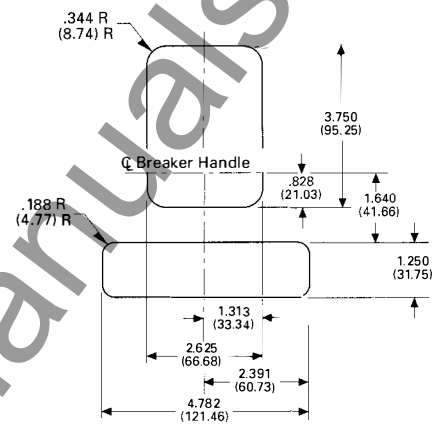

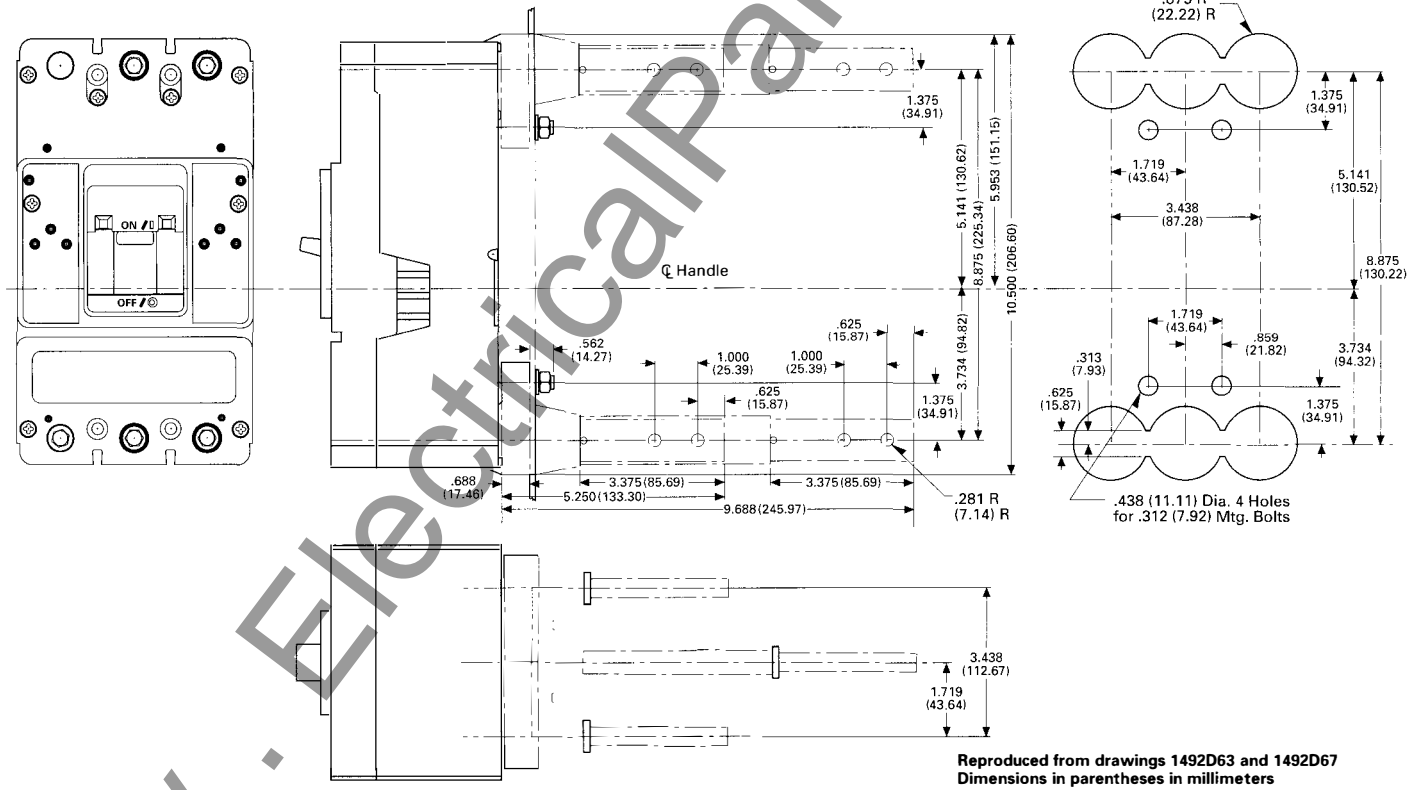

Reproduced from drawings 1492D63 and 1492D67
Dimensions in parentheses in millimeters

Cutler-Hammer
Westinghouse & Cutler-Hammer Products
Five Parkway Center
Pittsburgh, Pennsylvania, U.S.A. 15220

Printed in U.S.A.
July 1996

www.ElectricalPartManuals.com

July 1996
New Information
Mailed to: E, D, C/29-100A

Series C® HMCP Motor Circuit Protectors 3-600 Amperes

L-Frame

Front View

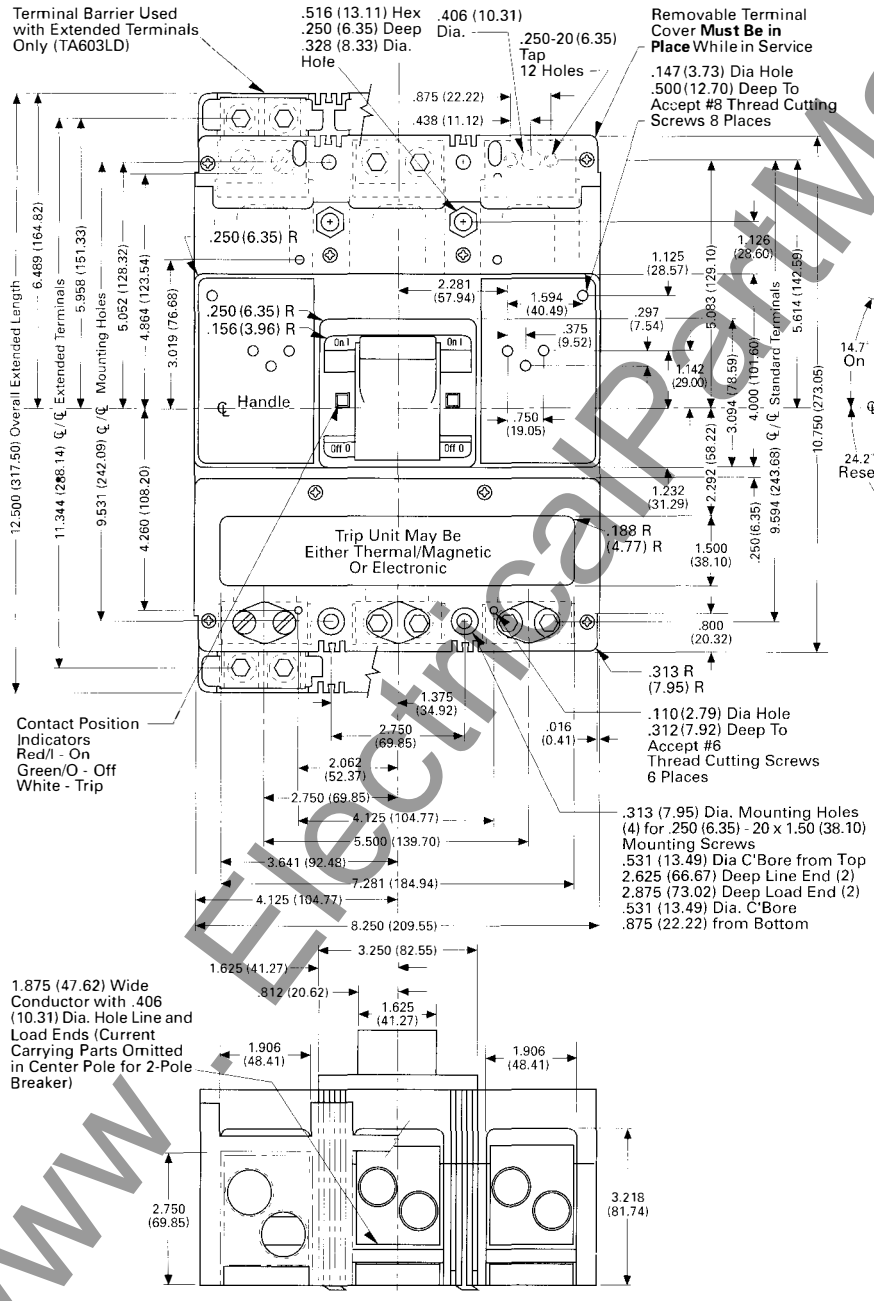

Side View

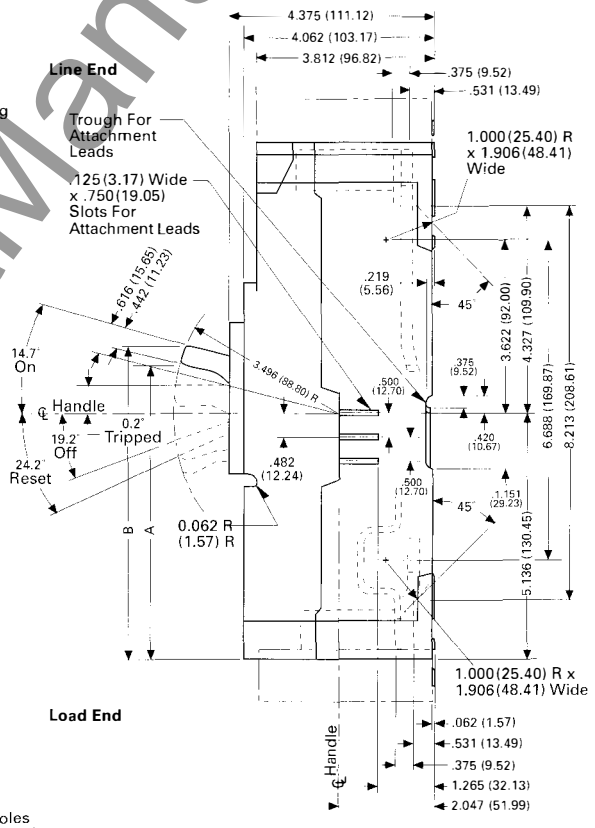

Handle Forces (From End of Handle)①

On	45 lbs.
Off	50 lbs.
Reset	60 lbs.

① Measurements taken approximately 3/16 in. from end of handle.

Reproduced from drawings 1493D63 and 1493D67

Dimensions in parentheses in millimeters

www.ElectricalPartManuals.com

Series C HMCP Motor Circuit Protectors, 3-600 Amperes

L-Frame
Drilling Plans

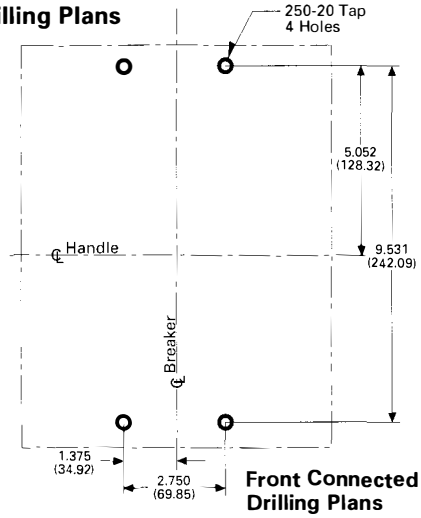

Front Connected Drilling Plans

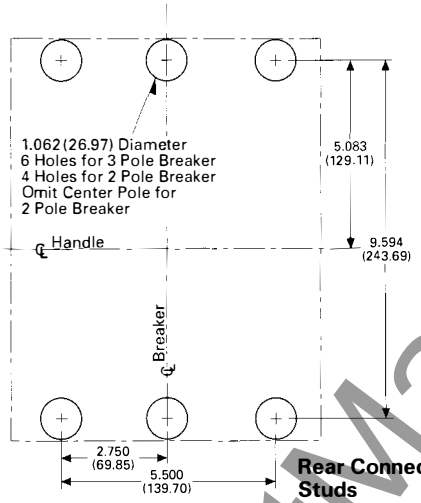

Rear Connected Studs

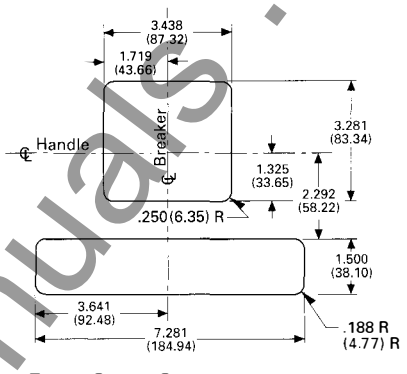

Front Cover Cutout

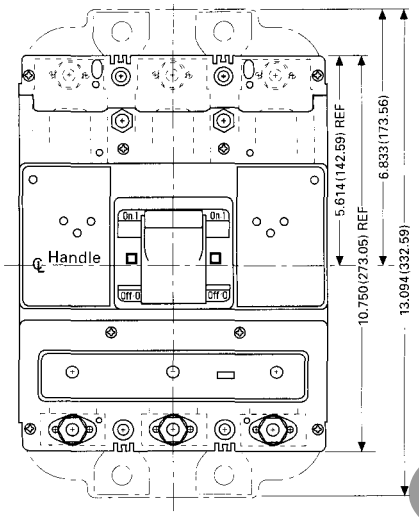

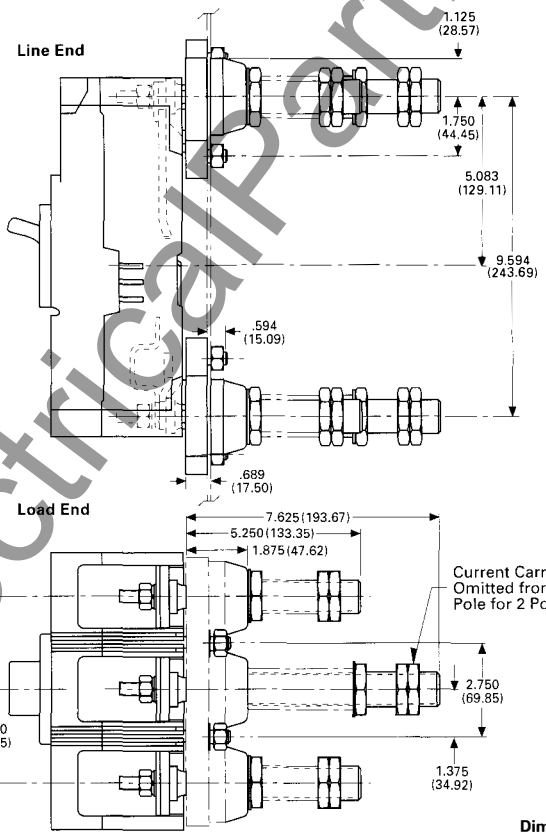

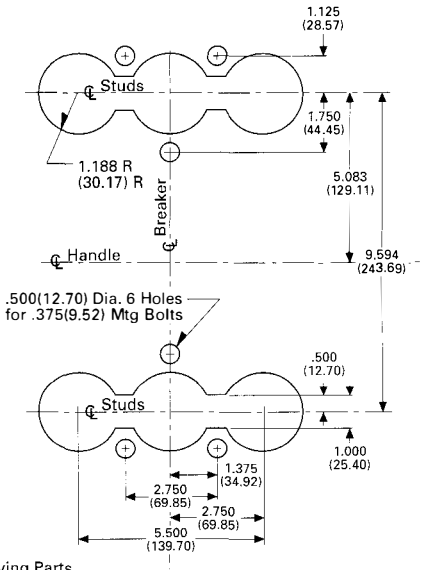

Plug-In Block Mounting Panel

Reproduced from drawings 1493D63 and 1493D67

Dimensions in parentheses in millimeters

Cutler-Hammer
Westinghouse & Cutler-Hammer Products
Five Parkway Center
Pittsburgh, Pennsylvania, U.S.A. 15220

www.ElectricalPartManuals.com

February 1993
New Information
Mailed to: E, D, C/29-100A, 31-400A, 31-500A

Page 65: Types REA, REH One, Two, and Three-Pole
Page 66: Type RE One, Two, and Three-Pole

AB DE-ION® Circuit Breakers

Type REA One, Two, and Three-Pole Breakers

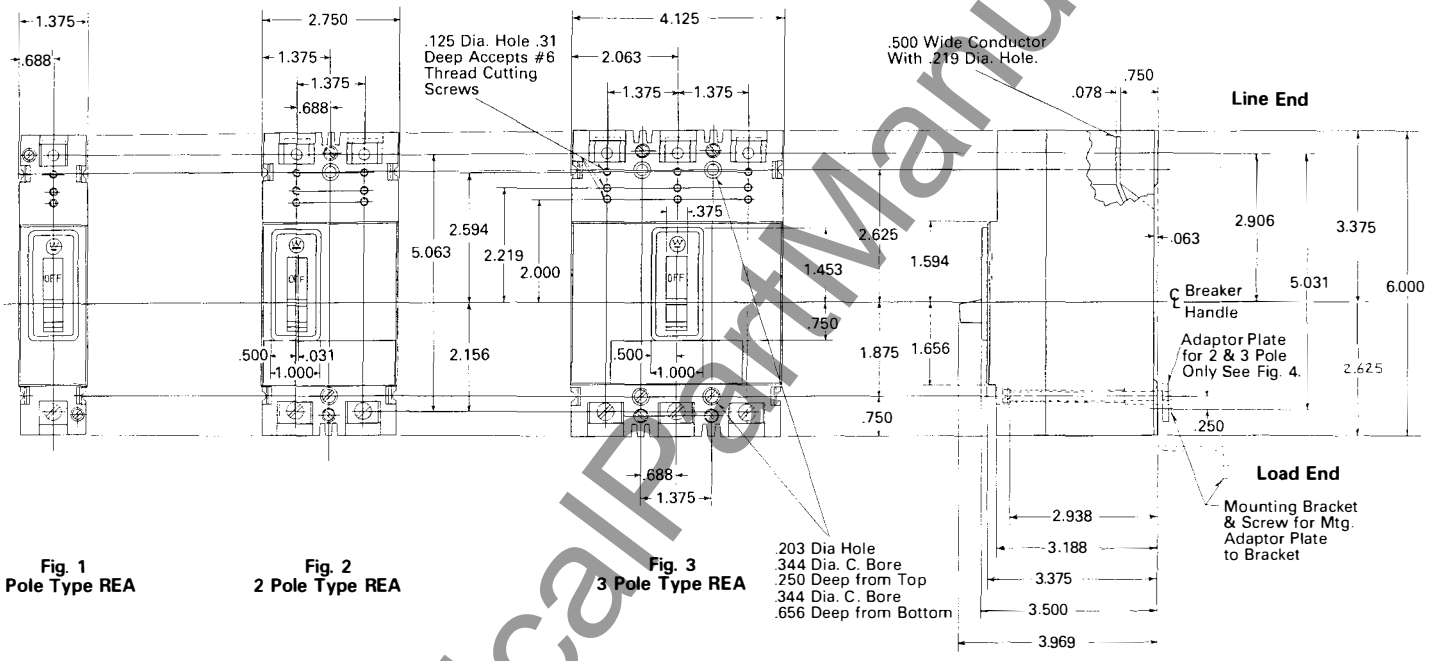

Fig. 1
1 Pole Type REA

Fig. 2
2 Pole Type REA

Fig. 3
3 Pole Type REA

Type REH One, Two, and Three-Pole Breakers

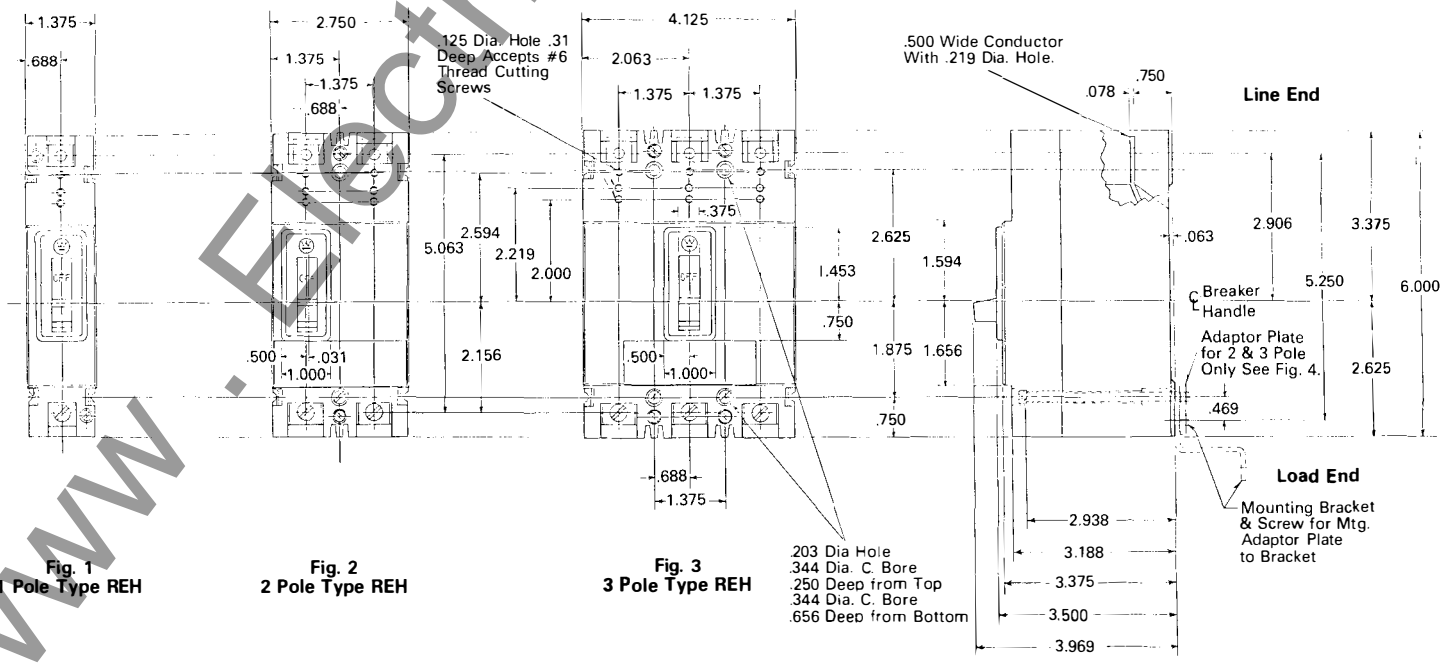

Fig. 1
1 Pole Type REH

Fig. 2
2 Pole Type REH

Fig. 3
3 Pole Type REH

www.ElectricalPartManuals.com

AB DE-ION® Circuit Breakers

Type RE One, Two, and Three-Pole Breakers

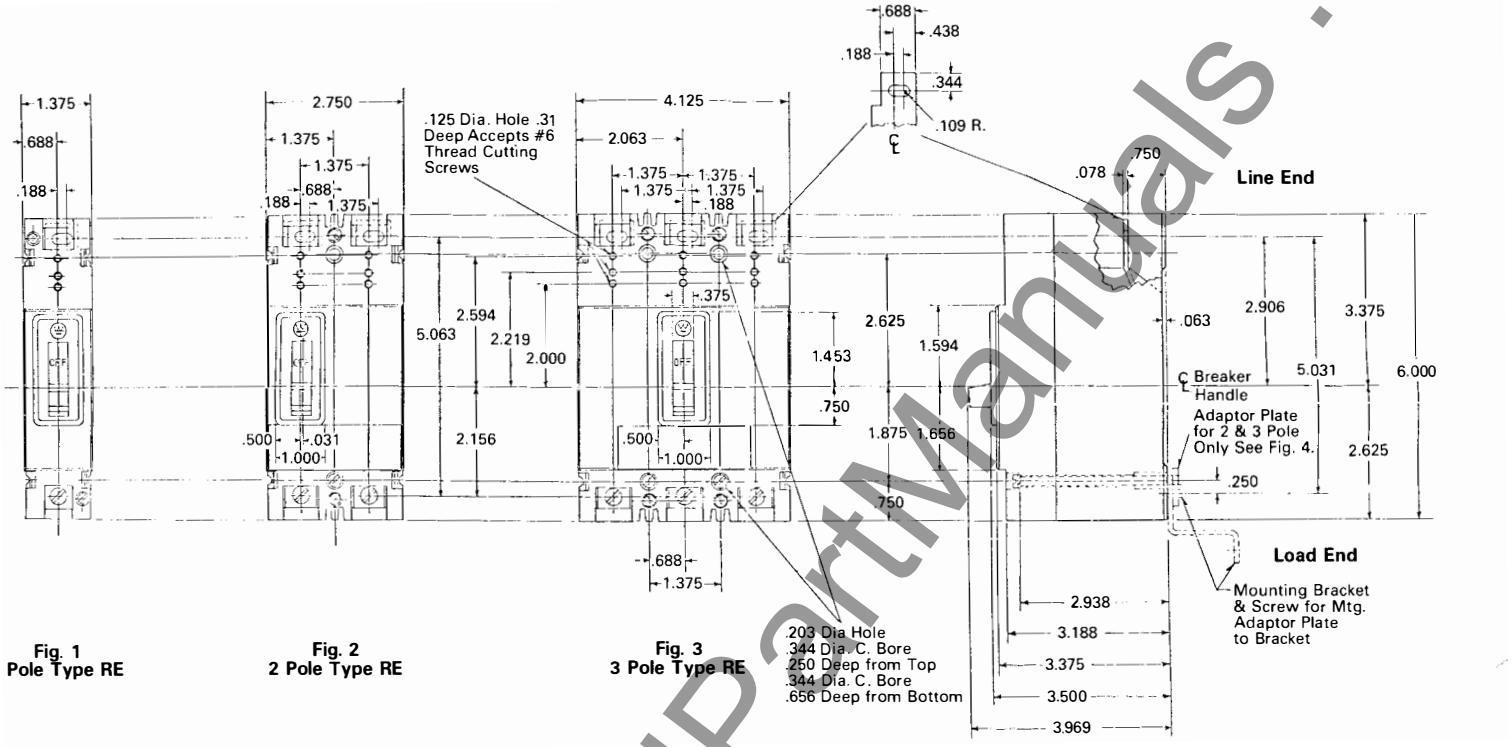

Fig. 1
1 Pole Type RE

Fig. 2
2 Pole Type RE

Fig. 3
3 Pole Type RE

www . ElectricalPartManuals . com

February 1993
New Information
Mailed to: E, D, C/29-100A, 31-400A, 31-500A

Types RFA, RHFA, RF, RHF Two and Three-Pole

AB DE-ION® Circuit Breakers

Types RFA, RHFA Two and Three-Pole Breakers

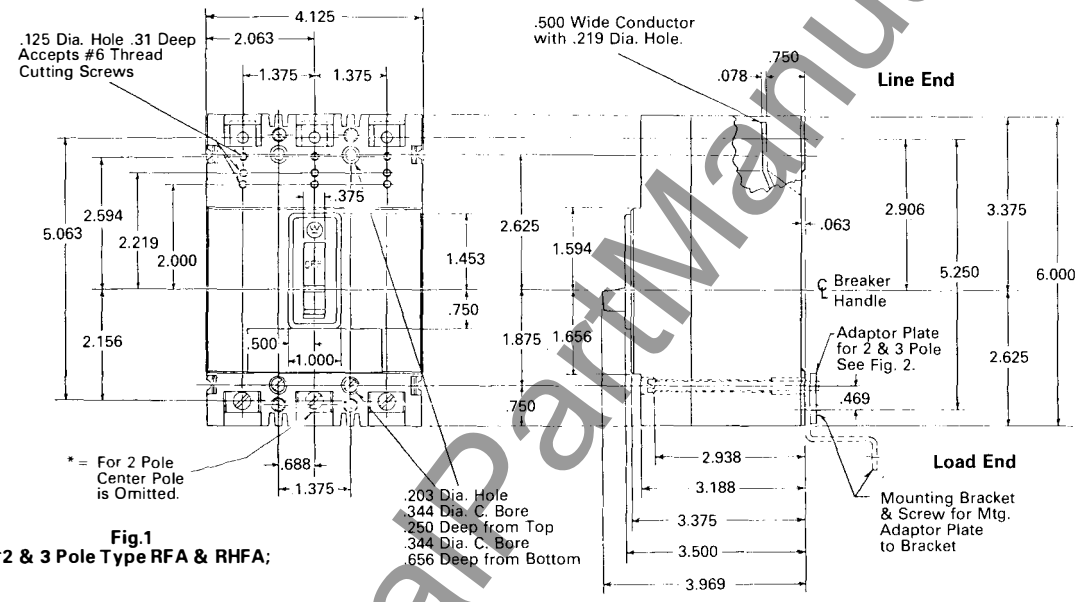

Fig.1
***2 & 3 Pole Type RFA & RHFA;**

Types RF, RHF Two and Three-Pole Breakers

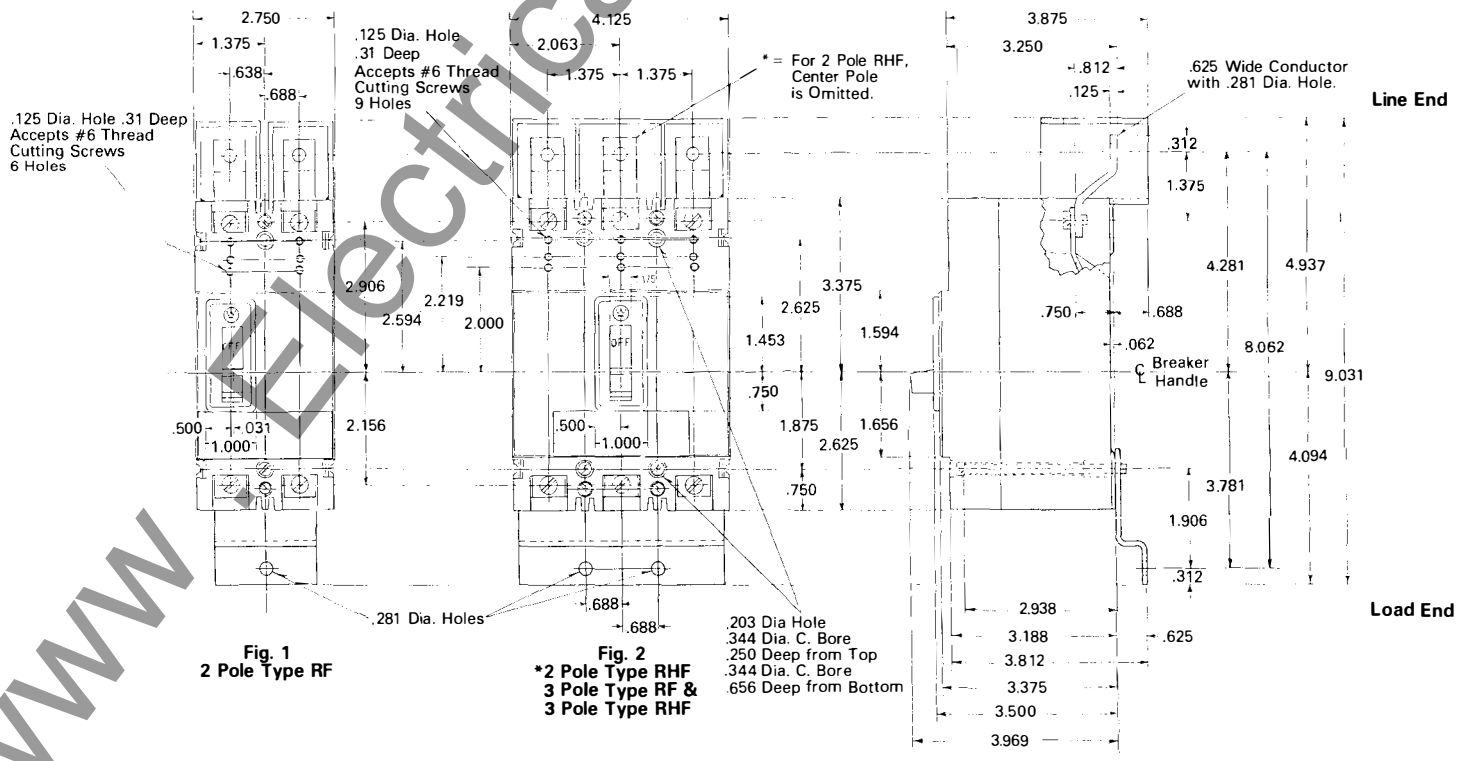

Fig. 1
2 Pole Type RF

Fig. 2
***2 Pole Type RHF**
3 Pole Type RF &
3 Pole Type RHF

www.ElectricalPartManuals.com

www . ElectricalPartManuals . com

Printed in U.S.A.

Westinghouse Electric Corporation
Distribution and Control Business Unit
Electrical Components Division
Pittsburgh, Pennsylvania, U.S.A. 15220

February 1993

June, 1989
Supersedes Dimension Sheet 29-170, pages 23-24, dated October, 1977
Mailed to: E, D, C/29-100A, 31-400A, 31-500A

Page 23: Types CA, CAH, and HCA 225 Amperes
Page 24: Types JA, KA, MARK 75® Type HKA 225 Amperes

AB DE-ION® Circuit Breakers

Type CA and CAH Breakers

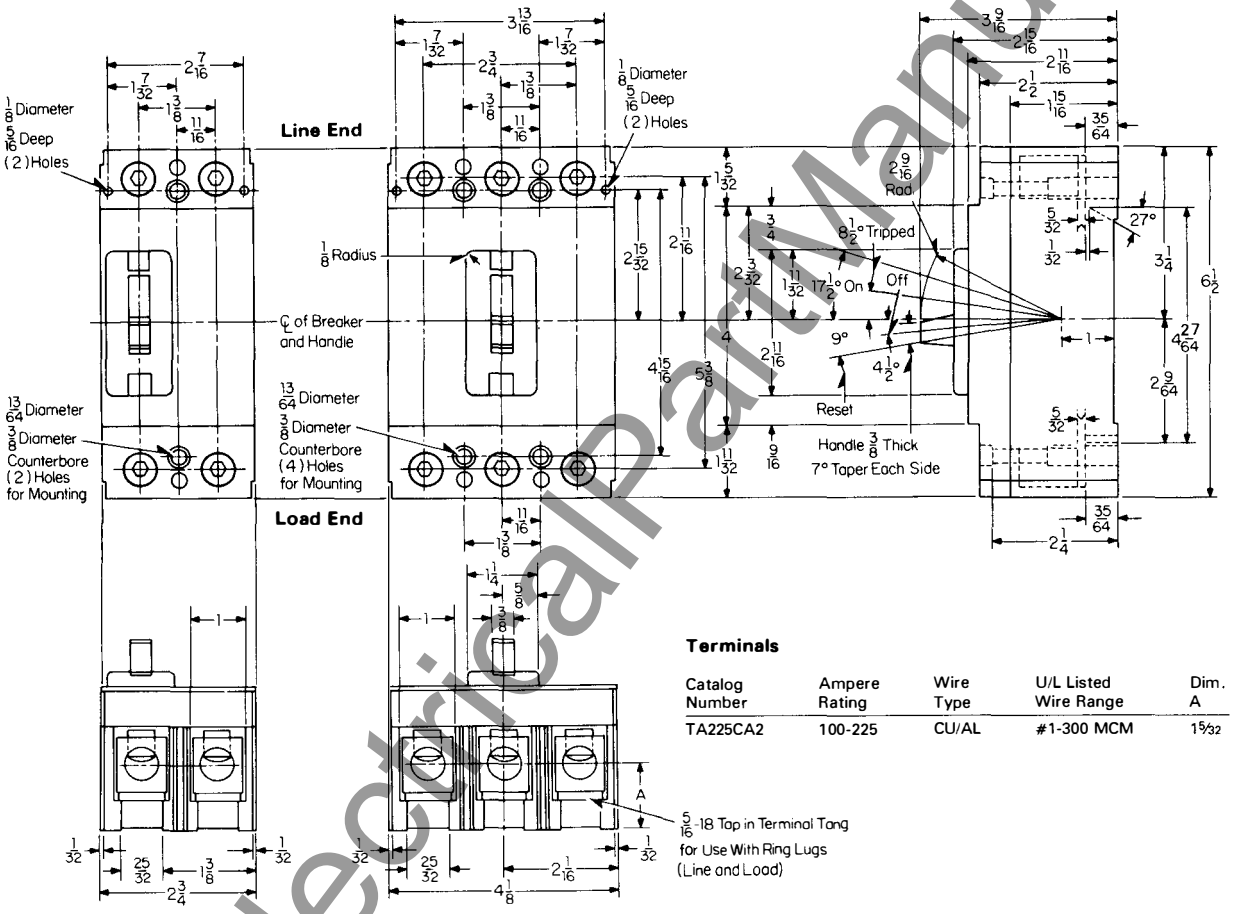

Terminals

Catalog Number	Ampere Rating	Wire Type	U/L Listed Wire Range	Dim. A
TA225CA2	100-225	CU/AL	#1-300 MCM	1 5/32

Drilling Plan

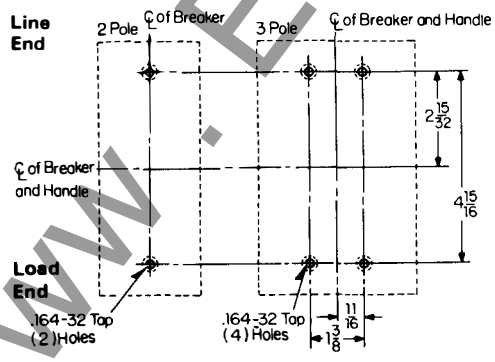

Front Cover Cutout

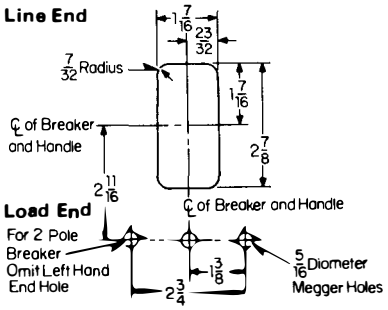

Reproduced From Drawing 374D130

www.ElectricalPartManuals.com

Type JA, KA and MARK 75® Type HKA Breakers

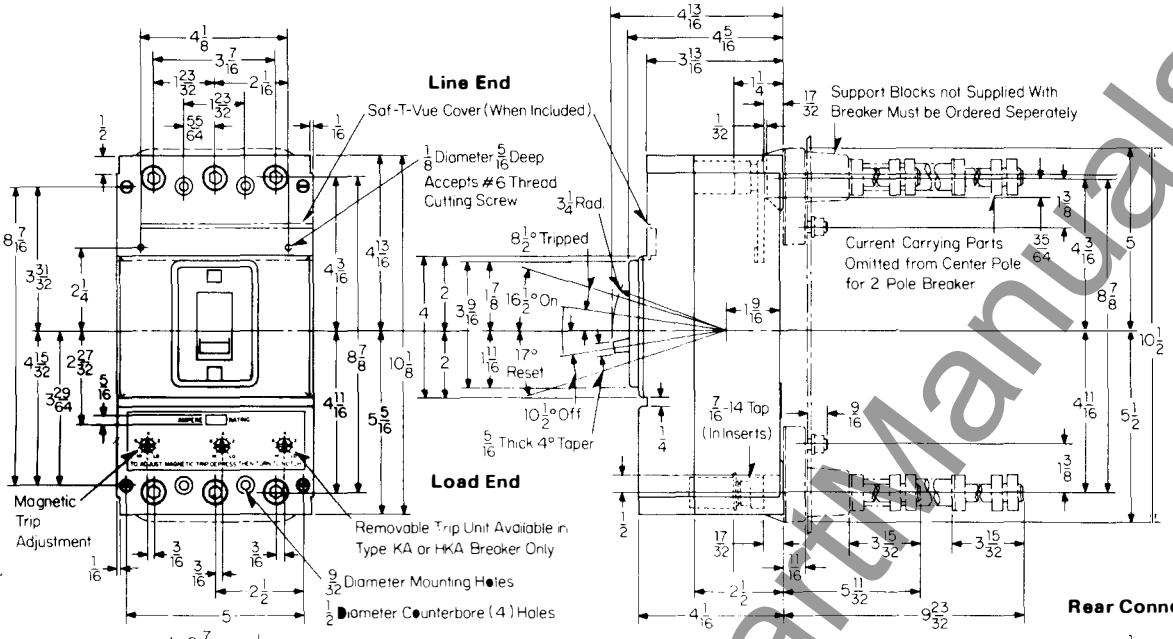

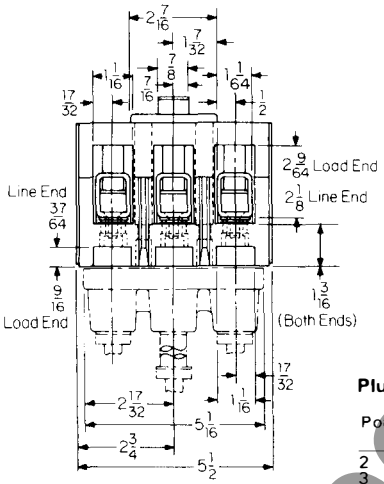

Terminal Arrangements

Breaker Rating, Amps.	Catalog Number	Wire Range, Type No. of Cables
Standard Al/Cu Pressure Terminals		
70-225	TA225LA1	1 #6-350 MCM Cu, or 1 #4-350 MCM Al
Optional Pressure Terminals (Copper Only)		
70-225	T225LA	1 #6-350 MCM
70-225ⓢ	T225LBF	1 #6-250 MCM

Rear Connected Studs

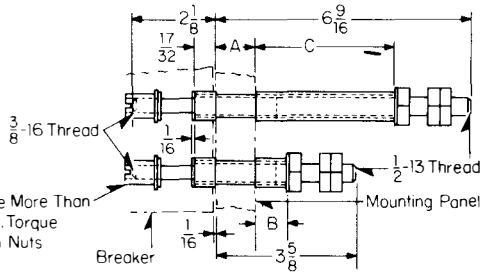

Stud Ampere Rating	Stud Style Number	Panel Thickness A	Tube Length B	Tube Length C	Tube Style Number
225A short	656D565G01	3/4 to 1	2 7/32		456D983H05
225A long	656D565G02	3/4 to 1		3 25/32	456D983H08
225A short	656D565G01	1/2 to 3/4	1 3/32		456D983H06
225A long	656D565G02	1/2 to 3/4		4 1/32	456D983H09
225A short	656D565G01	1/4 to 1/2	1 11/32		456D983H07
225A long	656D565G02	1/4 to 1/2		4 9/32	456D983H10

Stud complete consists of one stud assembly and one tube as per chart. Order long and short studs as required to obtain proper bus spacing.

Plug-In-Adapter Kit

Poles	Ampere Rating	Kit Style Number	Thread Size
2	70-225	313C644G29	1/2 - 13
3	70-225	313C644G30	1/2 - 13

Drilling Plans

For Mounting Bolts

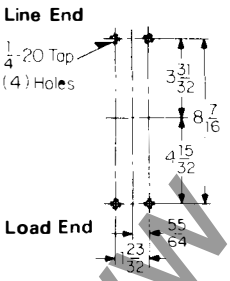

For Rear Connected Studs

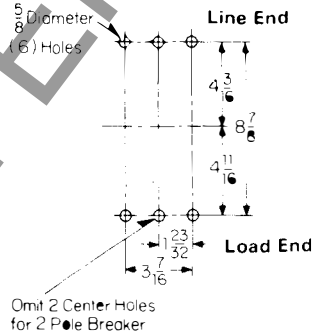

For Plug-In-Block

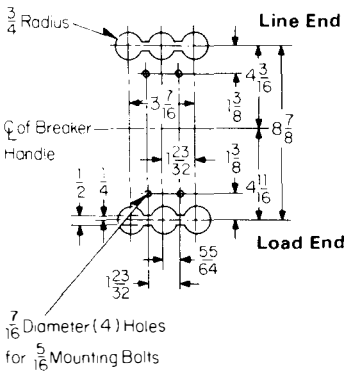

Front Cover Cutout

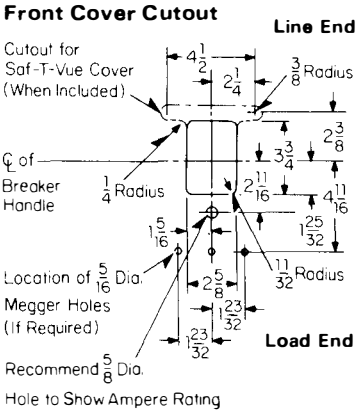

Reproduced From Drawing 456D970

Printed in U.S.A.

www.ElectricalPartManuals.com

March 1990
Supersedes Dimension Sheet 29-170, pages 27-28, dated October 1977
Mailed to: E, D, C/29-100A, 31-400A, 31-500A

Page 27: Types LAB, LA and MARK 75® Type HLA 400 Amperes
Page 28: Types LB, LBB and MARK 75® Type HLB 400 Amperes

AB DE-ION® Circuit Breakers

Type LAB, LA and MARK 75® Type HLA Breakers 400 Amperes

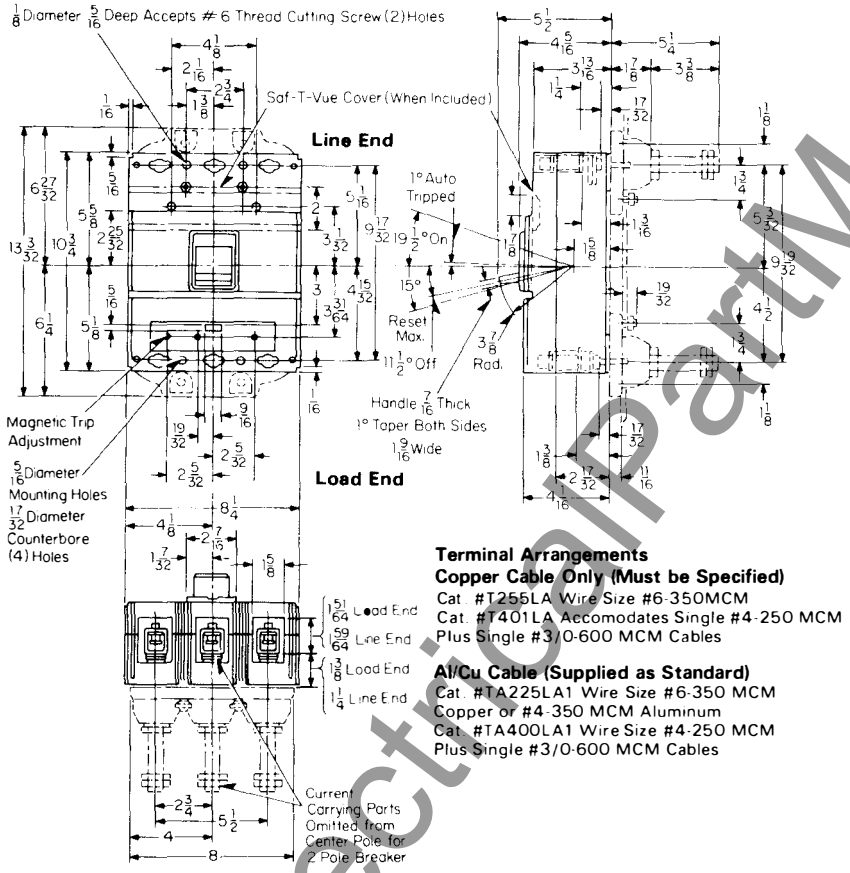

Terminal Arrangements

Copper Cable Only (Must be Specified)
Cat. #T255LA Wire Size #6-350MCM
Cat. #T401LA Accomodates Single #4-250 MCM
Plus Single #3/0-600 MCM Cables

Al/Cu Cable (Supplied as Standard)
Cat. #TA225LA1 Wire Size #6-350 MCM
Copper or #4-350 MCM Aluminum
Cat. #TA400LA1 Wire Size #4-250 MCM
Plus Single #3/0-600 MCM Cables

Rear Connected Studs
(For Non-Conductive Panels)

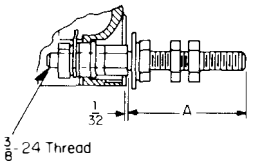

Ampere Rating	Style Number	Dimension A	Thread Size
225	1241345	3 7/32	½-13
225	1241346	6 9/32	½-13
225	1241392	4 31/32	½-13
400	0587383G15	5 15/32	¾-16
400	0587383G16	7 31/32	¾-16
400	0587383G17	10 15/32	¾-16

Plug-In Adapter Kit

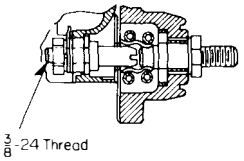

Poles	Ampere Rating	Style Number	Thread Size
2	70 to 400	313C644G25	¾-16
3	70 to 400	313C644G26	¾-16

Drilling Plans
For Mounting Bolts

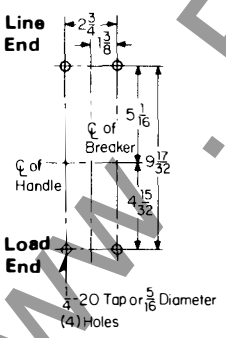

For Rear Connected Studs
(Non-Conductive Panels)

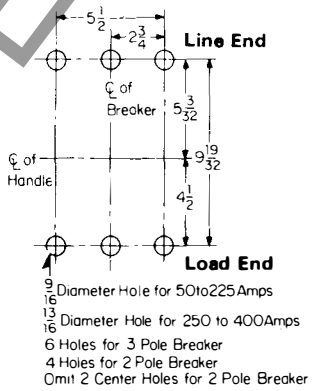

For Plug-In Block

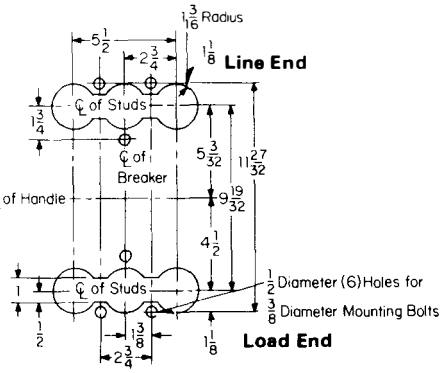

Front Cover Cutout

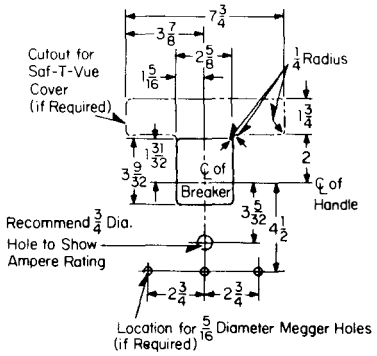

Reproduced from Drawing 455D789

www.ElectricalPartManuals.com

Type LB, LBB and MARK 75® Type HLB Breakers

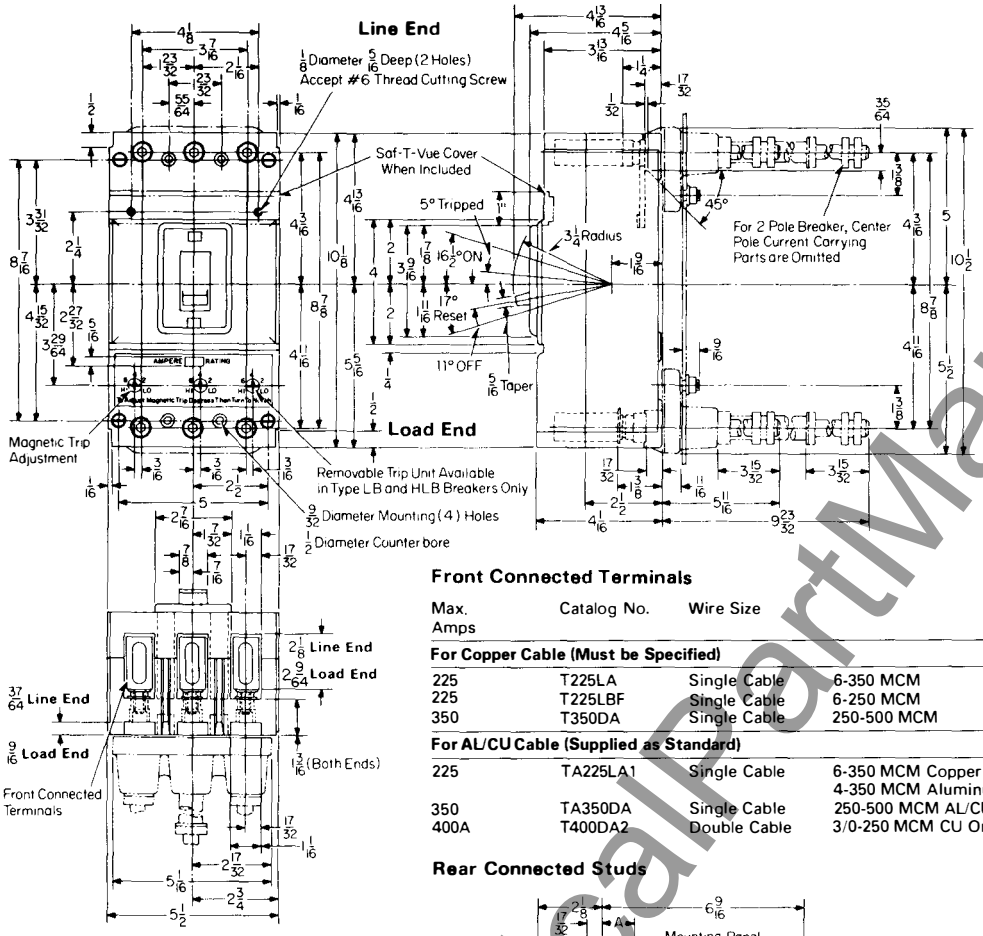

Drilling Plans For Mounting Bolts

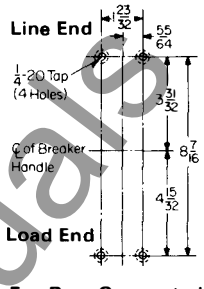

For Rear Connected Studs

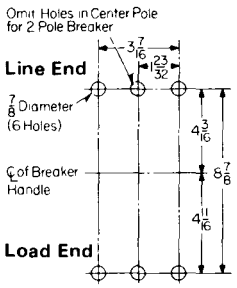

For Plug-in Block

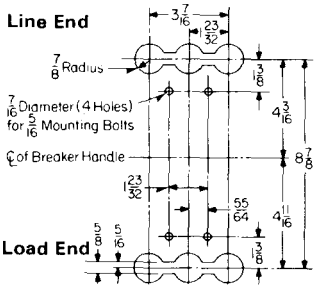

Front Cover Cutout

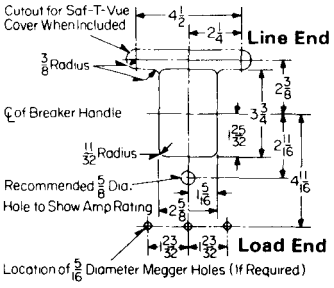

Front Connected Terminals

Max. Amps	Catalog No.	Wire Size	
For Copper Cable (Must be Specified)			
225	T225LA	Single Cable	6-350 MCM
225	T225LBF	Single Cable	6-250 MCM
350	T350DA	Single Cable	250-500 MCM
For AL/CU Cable (Supplied as Standard)			
225	TA225LA1	Single Cable	6-350 MCM Copper or 4-350 MCM Aluminum
350	TA350DA	Single Cable	250-500 MCM AL/CU
400A	T400DA2	Double Cable	3/0-250 MCM CU Only

Plug-In Adapter Kit

Poles	Ampere Rating	Kit Style Number	Thread Size
2	250-400	313C644G45	3/4-16
3	250-400	313C644G46	3/4-16

Rear Connected Studs

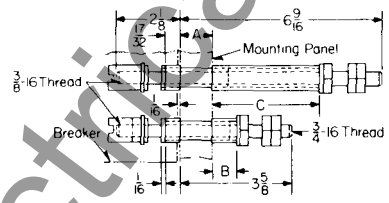

Stud Ampere Rating	Stud Style Number	Panel Thickness A	Tube length B	Tube length C	Tube Style Number
400A-short	656D565G03	3/4 to 1	2 7/32		313C909H17
400A-long	656D565G04	3/4 to 1		3 25/32	313C909H20
400A-short	656D565G03	1/2 to 3/4	1 3/32		313C909H18
400A-long	656D565G04	1/2 to 3/4		4 1/32	313C909H21
400A-short	656D565G03	1/4 to 1/2	1 11/32		313C909H19
400A-long	656D565G04	1/4 to 1/2		4 9/32	313C909H22

Stud complete consists of one stud assembly and one tube as per chart.

Reproduced From Drawing 5680D06

Westinghouse Electric Corporation
Distribution and Control Business Unit
Electrical Components Division
Pittsburgh, Pennsylvania, U.S.A. 15220

Printed in U.S.A.

www.ElectricalPartManuals.com

December, 1988
Supersedes Dimension Sheet 29-170, pages 33-34, dated November, 1981
Mailed to: E, D, C/29-100A, 31-400A, 31-500A

Page 33: Types MC, MCC, MCG, MCCG, MCY, MARK 75® Types HMC, HMCC, HMCG, HMCCG 800 Ampere SELTRONIC™ Circuit Breakers

Page 34: Types NC, NCG, NCY, MARK 75® Types HNC, HNCG 1200 Ampere SELTRONIC™ Breakers

AB DE-ION® Circuit Breakers

Types MC, MCC, MCG, MCCG, MCY, MARK 75® Types HMC, HMCC, HMCG, HMCCG Breakers©

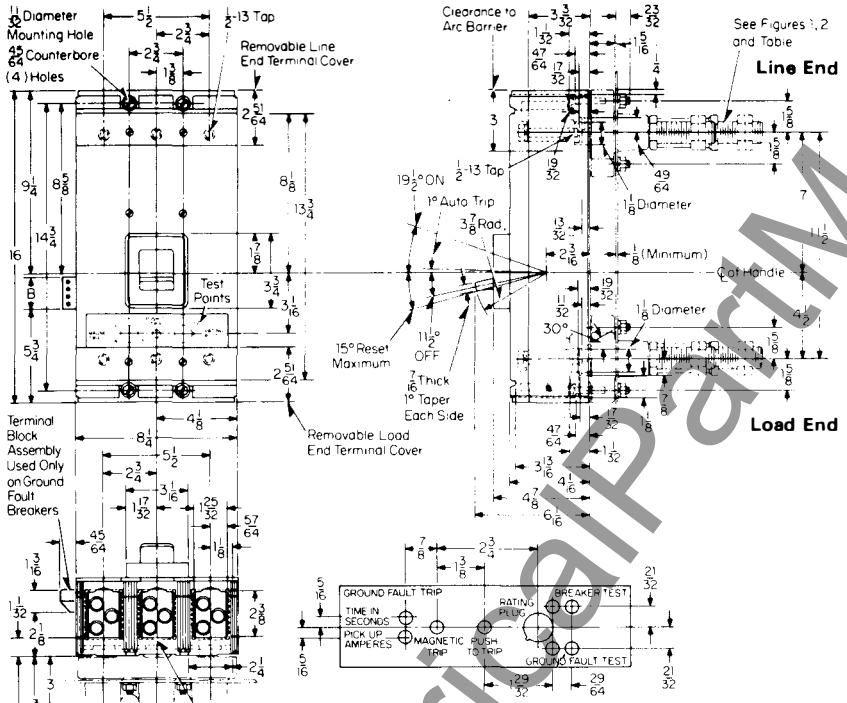

Nameplate (Used with Ground Fault Trip)

	B
2 Terminal Unit	$1\frac{3}{16}$
4 Terminal Unit	$1\frac{9}{16}$

Front Connected Terminals
(Must be Ordered Separately)

Amp Rating	Catalog No	Wire Size Number of Cables
For AL/CU Cable		
600	TA700MA1	(2)#1-500MCM
800	TA800MA2	(3) 3/0-400MCM
For Copper Cable		
600	T600MA1	(2) 2/0-500MCM
800	T800MA1	(3) 3/0-300MCM

Rear Connected Studs
2 Required Per Pole (Not Supplied With Breaker)

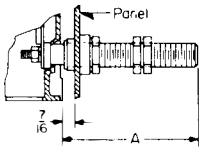

Stud Ampere Rating	Stud Style Number	Thread Size	Dimension A
250-400	314C960G04	¾-16	$5\frac{29}{32}$
250-400	314C960G05	¾-16	$8\frac{13}{32}$
250-400	314C960G06	¾-16	$10\frac{29}{32}$
450-600	314C960G07	1-12	$5\frac{29}{32}$
450-600	314C960G08	1-12	$8\frac{13}{32}$
450-600	314C960G09	1-12	$10\frac{29}{32}$
700-800	314C960G10	1⅛-12	$5\frac{29}{32}$
700-800	314C960G11	1⅛-12	$8\frac{13}{32}$
700-800	314C960G12	1⅛-12	$10\frac{29}{32}$

Plug-In Adapter Kit
1 Kit Per Breaker (Not Supplied With Breaker)

Poles	Ampere Rating	Kit Style Number	Thread Size	Fig
2	125-600	313C644G27	1⅛-12	1
3	125-600	313C644G28	1⅛-12	1
2	700-800	176C544G01	1⅛-12	2
3	700-800	176C544G02	1⅛-12	2

Figure 1

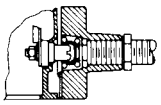

Figure 2

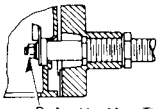

Do Not Use More Than 25Ft. Lbs. Torque to Tighten Nuts

Drilling Plans
For Mounting Bolts
(Front Connected Terminals)

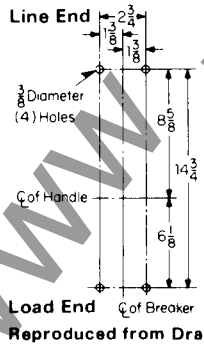

For Rear Connected Studs

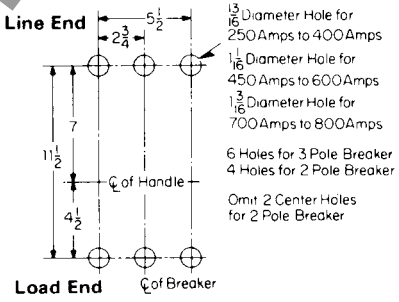

For Plug-In Adapter Kit

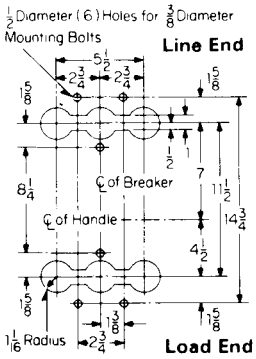

Front Cover Cutout

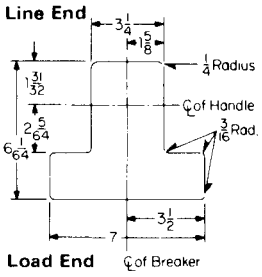

Reproduced from Drawing 2605D21

© Changed or added since previous issue.

www.ElectricalPartManuals.com

Type NC, NCG, NCY, MARK 75® Type HNC, HNCG Breakers©

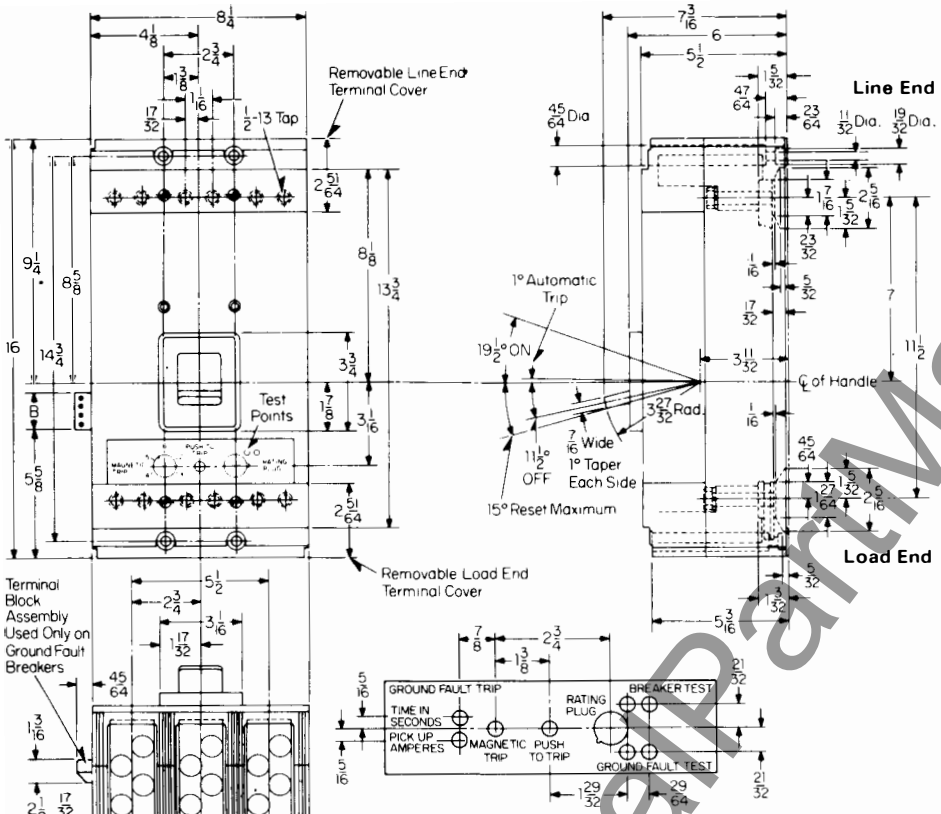

	B
2 Terminal Unit	13/16
4 Terminal Unit	1 9/16

Nameplate (Used with Ground Fault Trip)

Bolted Rear Connected Studs For 700-800 Amps

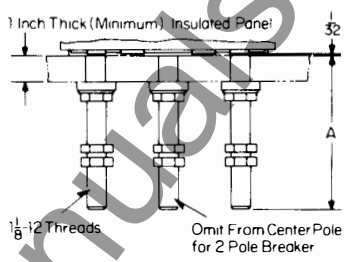

Style No	A
623B222G01	5 1/2
623B222G02	8
623B222G03	10 1/2

For 900-1200 Amps Only

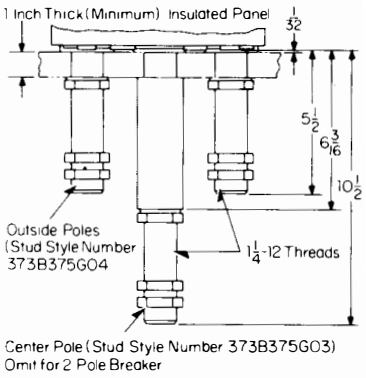

Front Connected Terminals
(Must be Ordered Separately)

Amp Rating	Catalog No	Wire Size Number of Cables
For AL/CU Cable		
600	TA700NB1	(2)#1-500MCM
1000	TA1000NB1	(3) 3/0-400MCM
1200	TA1201NB1	(3) 500-750MCM
1200	TA1200NB1	(4) 4/0-500MCM
For Copper Cable		
600	T700NB1	(2) 2/0-500MCM
1000	T1000NB1	(3) 3/0-500MCM
1200	T1200NB1	(4) 3/0-400MCM

Drilling Plans
For Mounting Bolts

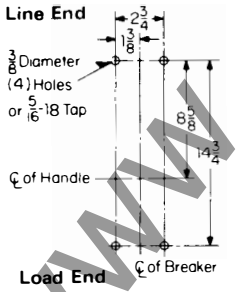

For Rear Connected Studs
(Insulated Panel)

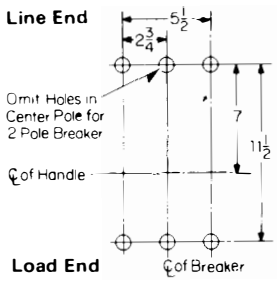

Amp Rating	Hole Dia
700-800	1 3/16
900-1200	1 5/16

Front Cover Cutout

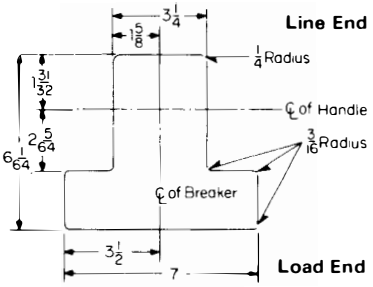

Reproduced from Drawing 2605D23

© Changed since previous issue.

Printed in U.S.A.

www . ElectricalPartManuals . com

February 1991
Supersedes Dimension Sheet 29-170, pages 35-36, dated November 1981
Mailed to: E, D, C/29-100A, 31-400A, 31-500A

Type NB and MARK 75® Type HNB

Page 35: Type NB, MARK 75® Type HNB
Page 36: Mounting Block for Type NB, MARK 75 HNB, SELTRONIC™ Types NC, MARK 75 HNC

AB DE-ION® Circuit Breakers

Type NB, MARK 75® Type HNB Breakers

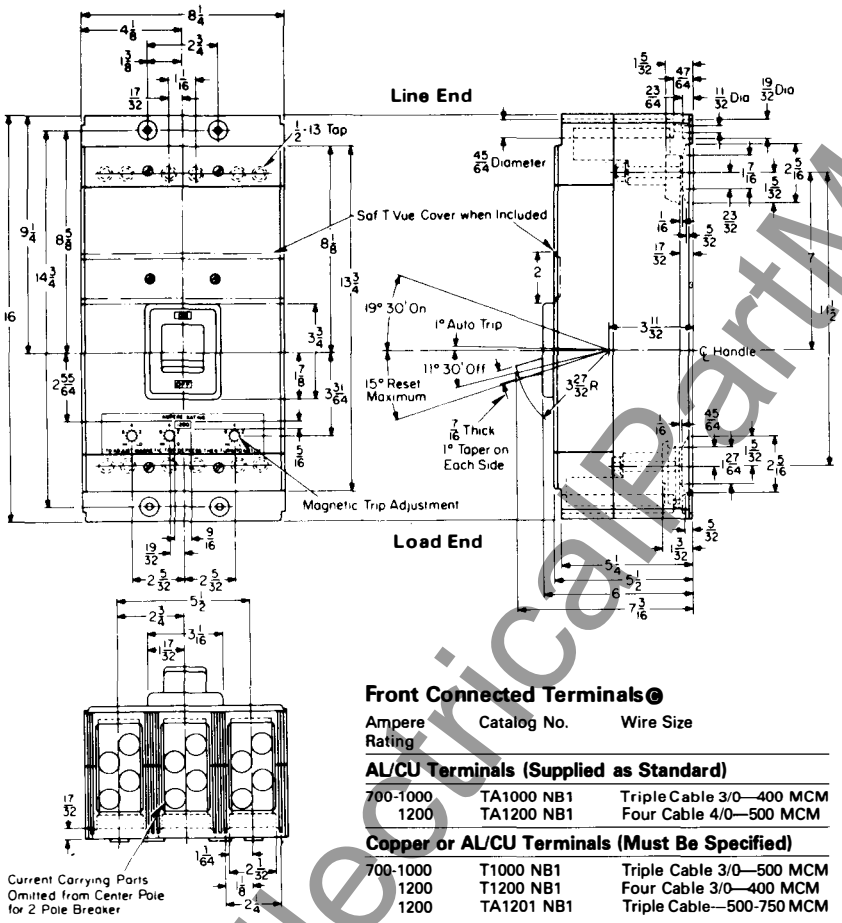

Bolted Rear Connected Studs
For 700 to 800 Amps

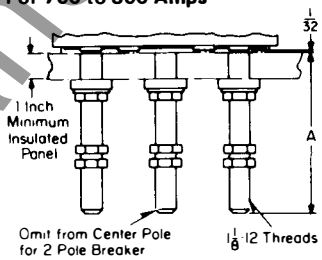

Style No.	A
623B222G01	5½
623B222G02	8
623B222G03	10½

For 900 to 1200 Amps Only

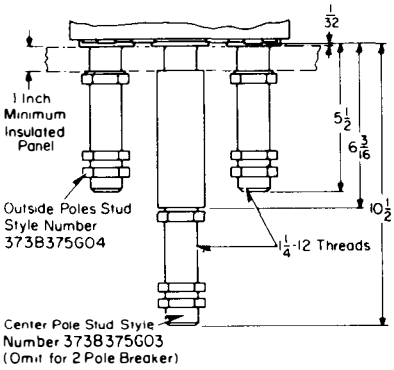

Front Connected Terminals©

Ampere Rating	Catalog No.	Wire Size
AL/CU Terminals (Supplied as Standard)		
700-1000	TA1000 NB1	Triple Cable 3/0—400 MCM
1200	TA1200 NB1	Four Cable 4/0—500 MCM
Copper or AL/CU Terminals (Must Be Specified)		
700-1000	T1000 NB1	Triple Cable 3/0—500 MCM
1200	T1200 NB1	Four Cable 3/0—400 MCM
1200	TA1201 NB1	Triple Cable—500-750 MCM

Drilling Plans
For Mounting Bolts
(Front Connected Terminals)

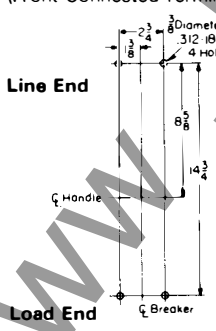

For Rear Connected Studs
(Insulated Panel)

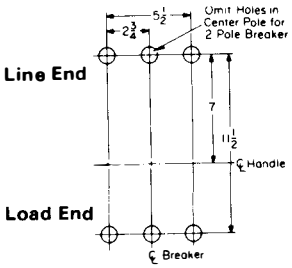

Style No.	A
623B222G01	5½
623B222G02	8
623B222G03	10½

Front Cover Cutout

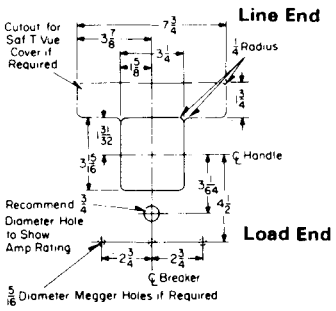

Reproduced From Drawing 371 D578

© Changed since previous issue.

www.ElectricalPartManuals.com

Mounting Block for Type NB, NC, MARK 75® Type HNB, HNC Breakers

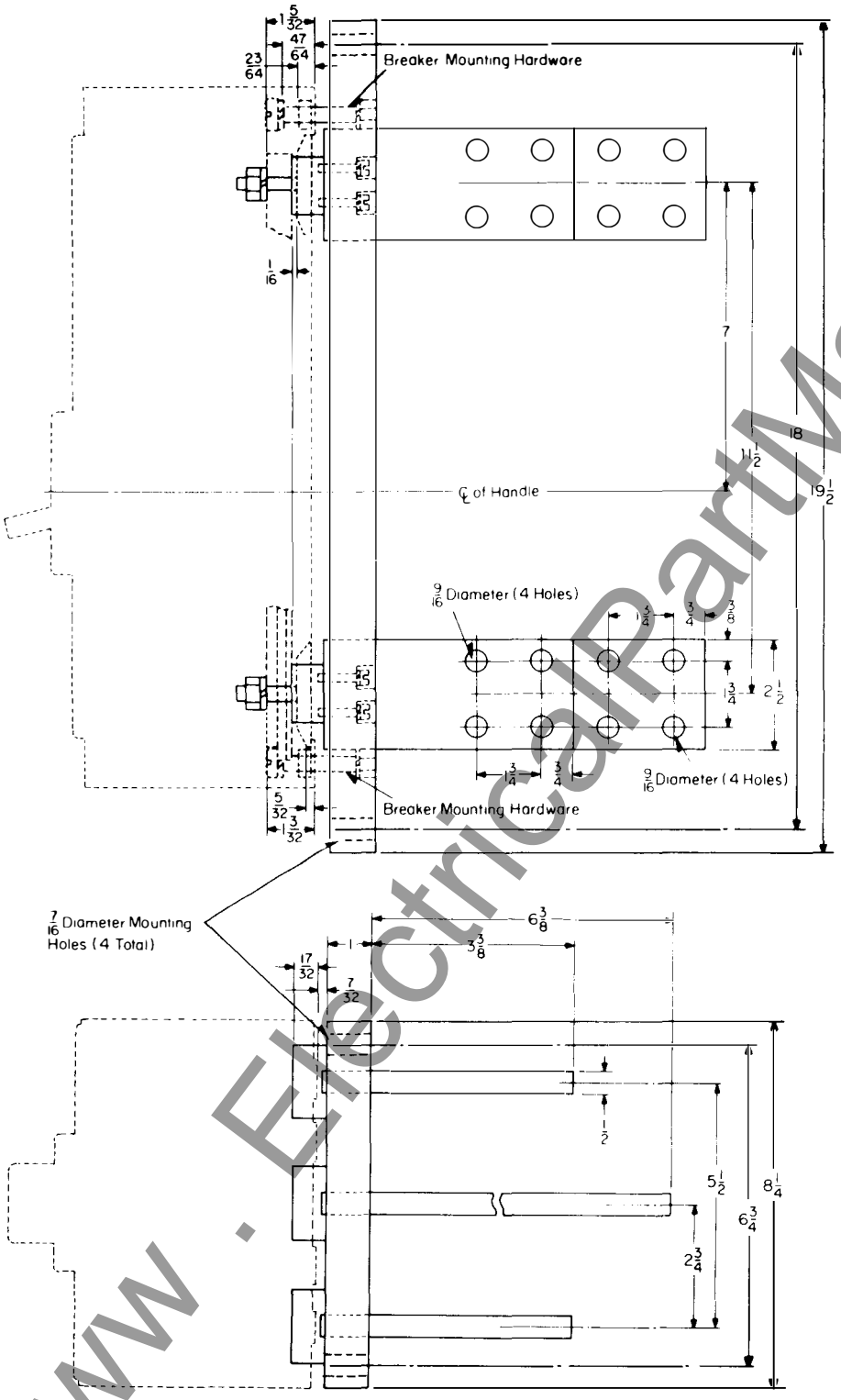

Reproduced From Drawing 4990D37

Printed in U.S.A.

www . ElectricalPartManuals . com

October, 1988
Supersedes Dimension Sheet 29-170, pages 41-42, dated October, 1977
Mailed to: E, D, C/29-100A, 31-400A, 31-500A

Types PC, PCC SELTRONIC™ Circuit Breakers

Page 41: 2000 and 2500 Amperes
Page 42: 3000 Amperes

AB DE-ION® Circuit Breakers

Type PC, PCC 2000 and 2500 Rear Connected Breakers

	A
2 Terminal Unit	13/16
4 Terminal Unit	1 9/16

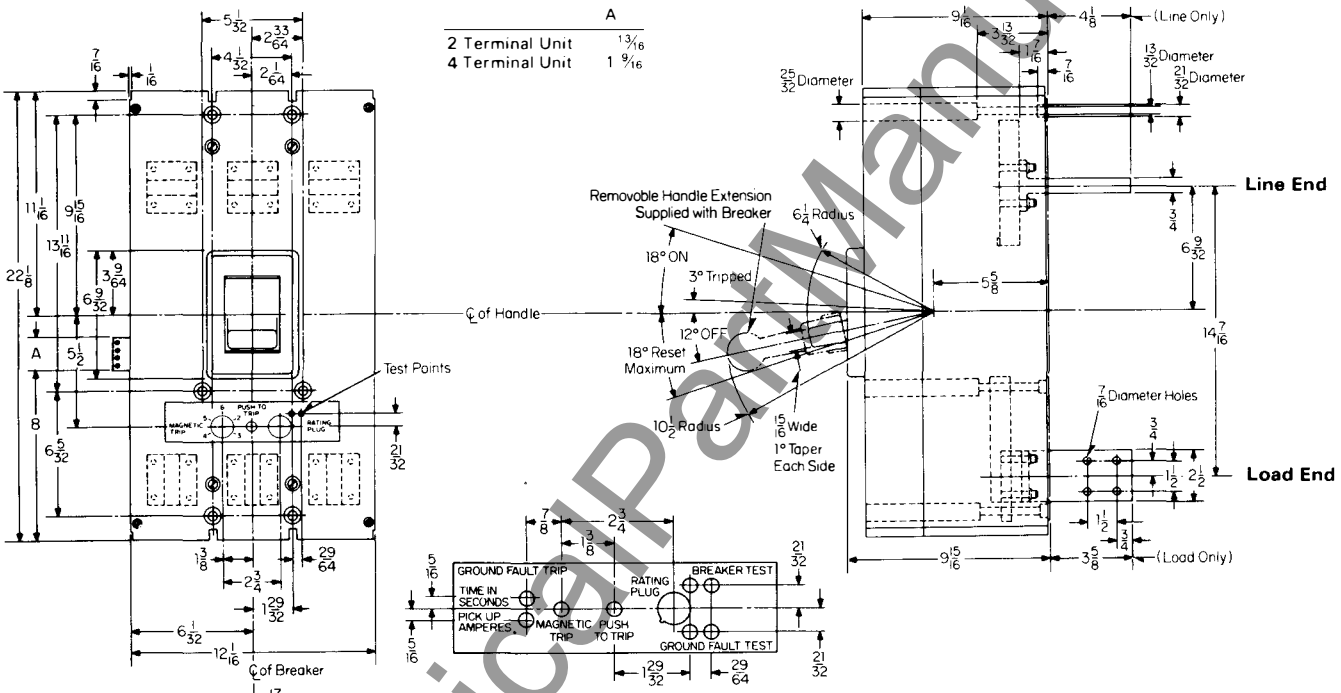

Nameplate (Used with Ground Fault Trip)

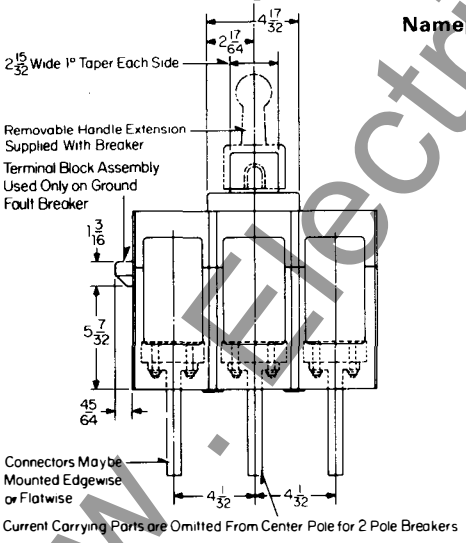

Drilling Plan
For Mounting Bolts

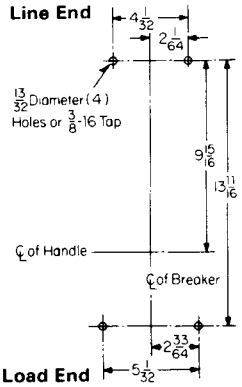

Front Cover Cutout

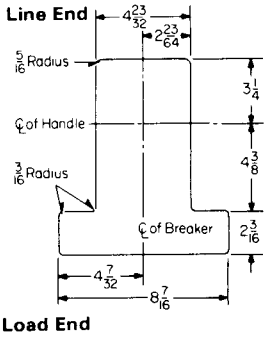

Reproduced from Drawing 2606D79

www.ElectricalPartManuals.com

Type PC, PCC 3000 Rear Connected Breakers

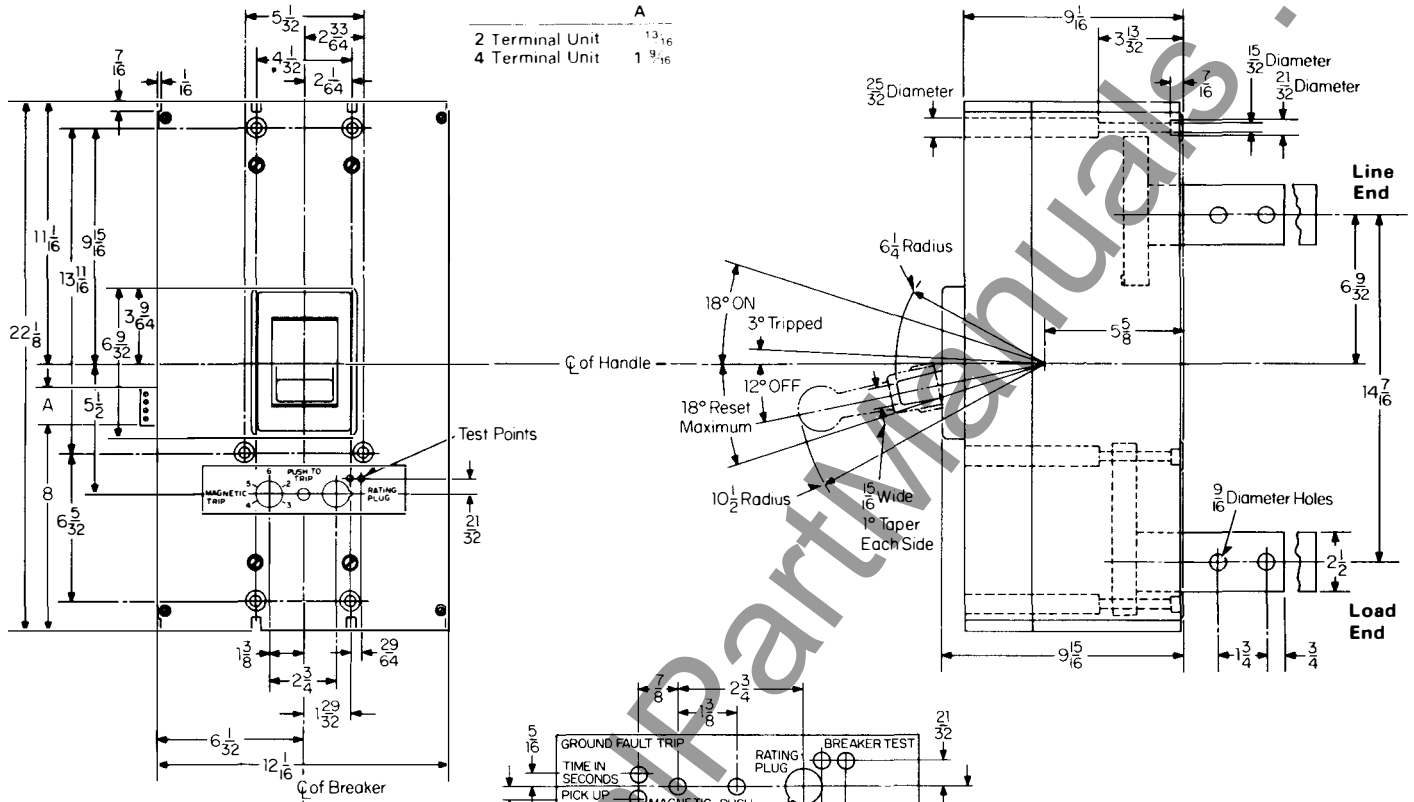

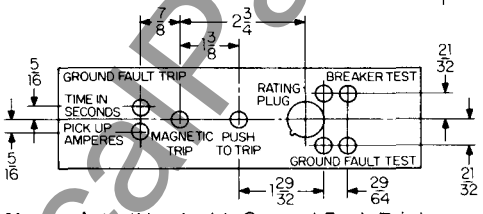

Nameplate (Used with Ground Fault Trip)

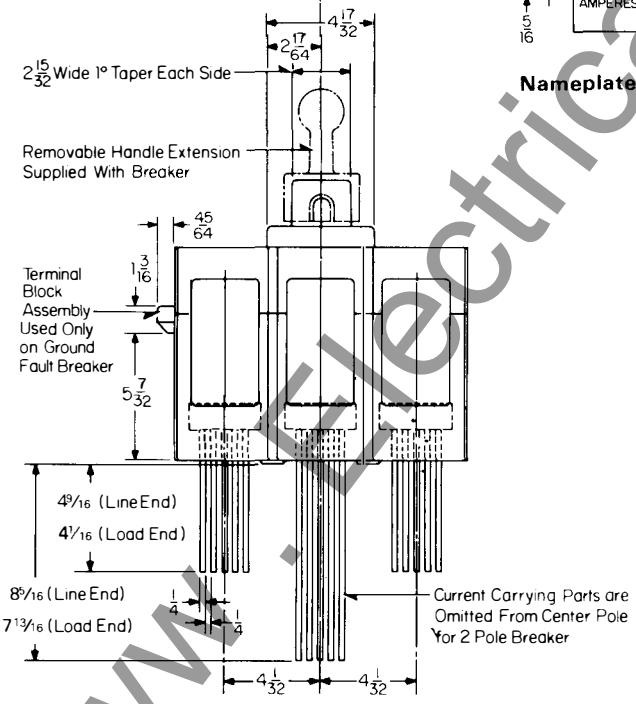

Drilling Plans
For Mounting Bolts

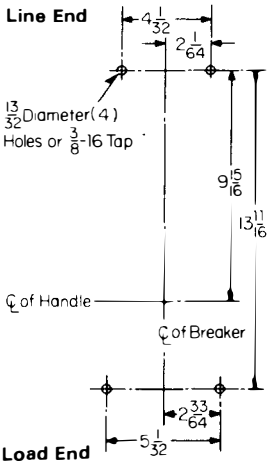

Front Cover Cutout

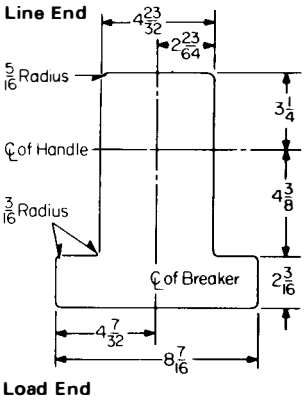

Reproduced from Drawing 2606D80

Printed in U.S.A.

www.ElectricalPartManuals.com

December, 1988
Supersedes Dimension Sheet 29-170,
pages 43-44, dated October, 1977
Mailed to: E, D, C/29-100A, 31-400A, 31-500A

SELTRONIC™ Circuit Breakers

Page 43: Types PCF, PCCF, PCFG, PCCFG, 2000 and 2500 Amp Front Connected
Page 44: Ground Fault Indicator kit

AB DE-ION® Circuit Breakers

Type PCF, PCCF, PCFG, PCCFG 2000, 2500 Breakers

Rating	A	B	C
2000 Amp	2½	1¼	½
2500 Amp	3	1½	1

	D
2 Terminal Unit	13/16
4 Terminal Unit	1 9/16

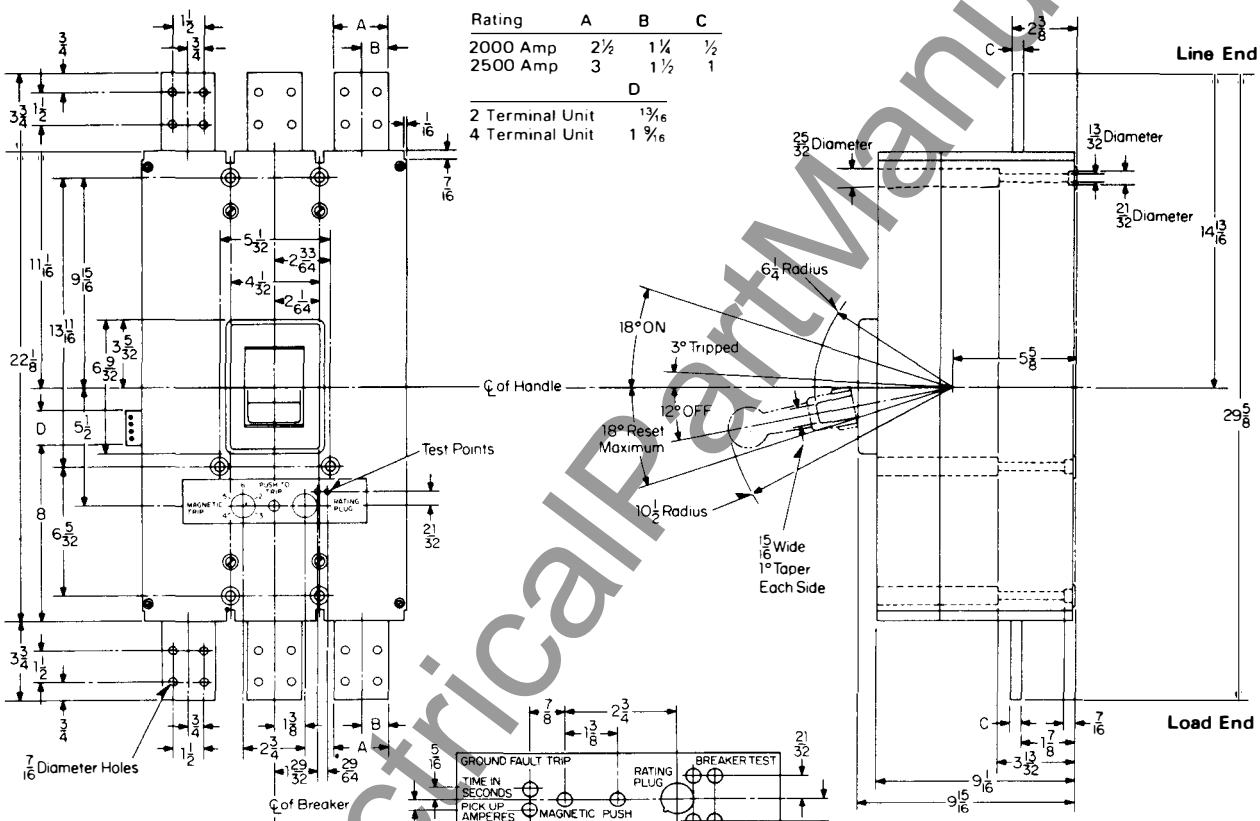

Nameplate (Used with Ground Fault Trip)

Drilling Plans
For Mounting Bolts

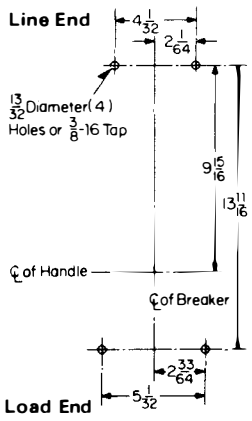

Front Cover Cutout

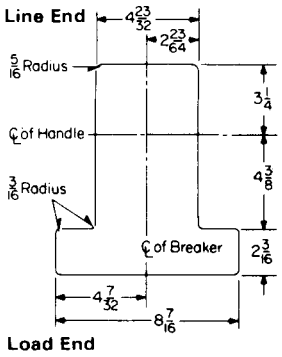

Reproduced from Drawing 2605D27

www.ElectricalPartManuals.com

Ground Fault Indicator Kit for SELTRONIC™ Breakers

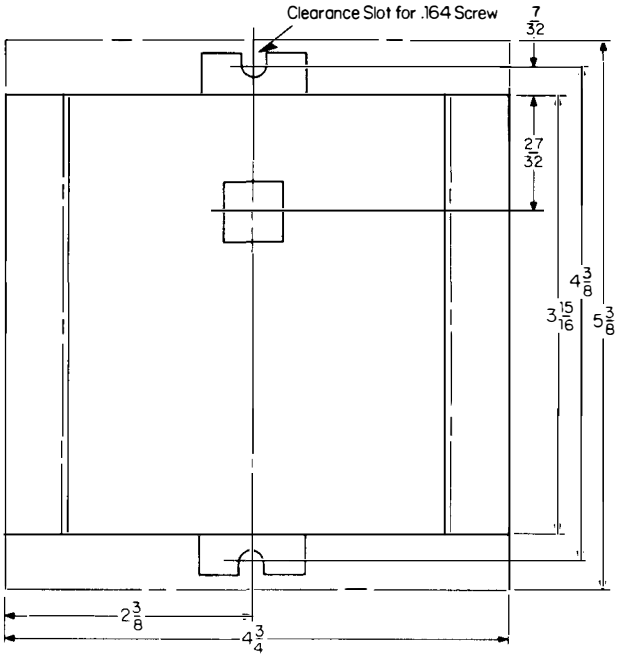

Drilling Plan and Cutout©
For Face Mounting Bracket

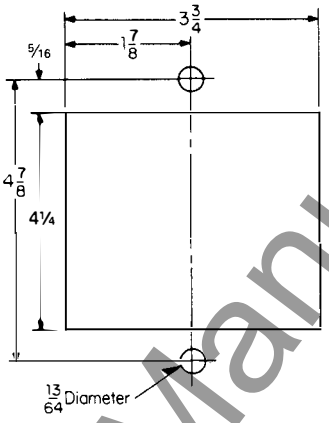

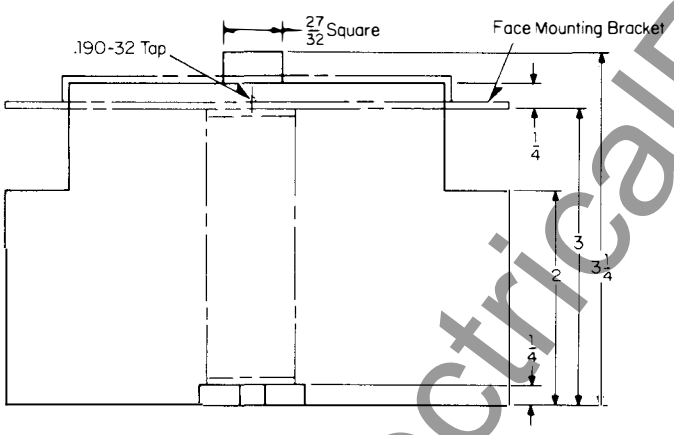

Reproduced From Drawing 750B870

© Changed or added since previous issue.

Westinghouse Electric Corporation
Distribution and Control Business Unit
Electrical Components Division
Pittsburgh, Pennsylvania, U.S.A. 15220

Printed in U.S.A.

www.ElectricalPartManuals.com

January, 1989
Supersedes Dimension Sheet 29-170, pages 49-50, dated November, 1981
Mailed to: E, D, C/29-100A, 31-400A, 31-500A

Type NB TRI-PAC® Circuit Breakers

Page 49: Outline Dimensions, Drilling Plans
Page 50: Mounting Block Dimensions

AB DE-ION® Circuit Breakers

Type NB, TRI-PAC® Breaker©

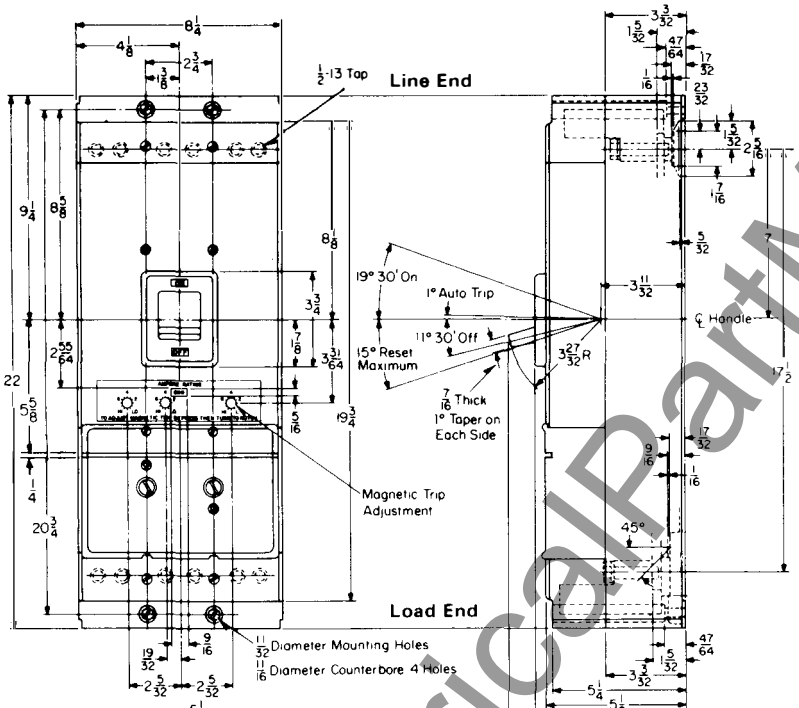

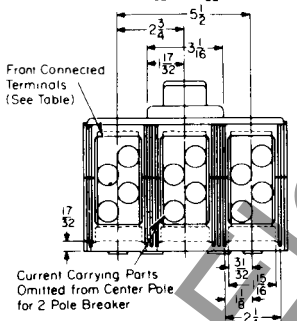

Bolted Rear Connected Studs
For 300 to 450 Amps

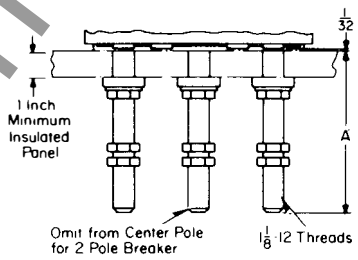

Style No	A
623B222G01	5½
623B222G02	8
623B222G03	10½

For 500 to 800 Amps Only

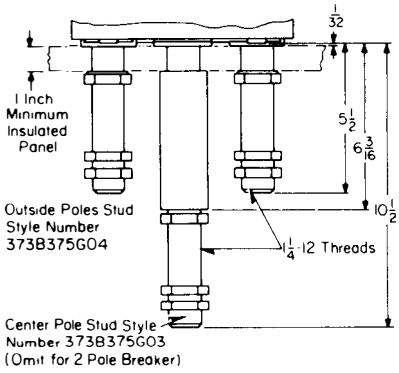

Front Connected Terminals©

Amp Rating	Catalog No.	Wire Size
For AL/CU Cable (Standard)		
300 to 700	TA700 NB 1	Two #1-500 MCM
800	TA1000 NB 1	Three #3/0-400 MCM
For Copper Cable (Optional)		
300 to 350	T350 NB	Single Cable 1 to 600 MCM
400 to 700	T700 NB 1	Double Cable 2/0 to 500 MCM
800	T1000 NB 1	Triple Cable 3/0 to 500 MCM

Drilling Plans
For Mounting Bolts
(Front Connected Terminals)

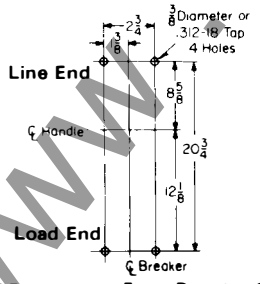

For Rear Connected Studs (Insulated Panel)

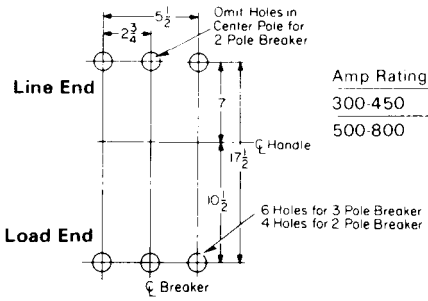

Amp Rating	Hole Dia
300-450	1 3/16
500-800	1 5/16

Front Cover Cutout

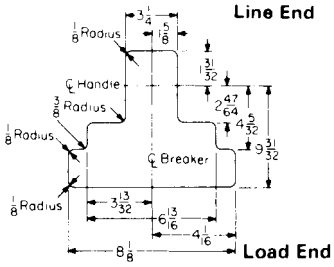

Reproduced From Drawing 372D515

© Changed since previous issue.

www.ElectricalPartManuals.com

Mounting Block for Type NB TRI-PAC® Breakers●

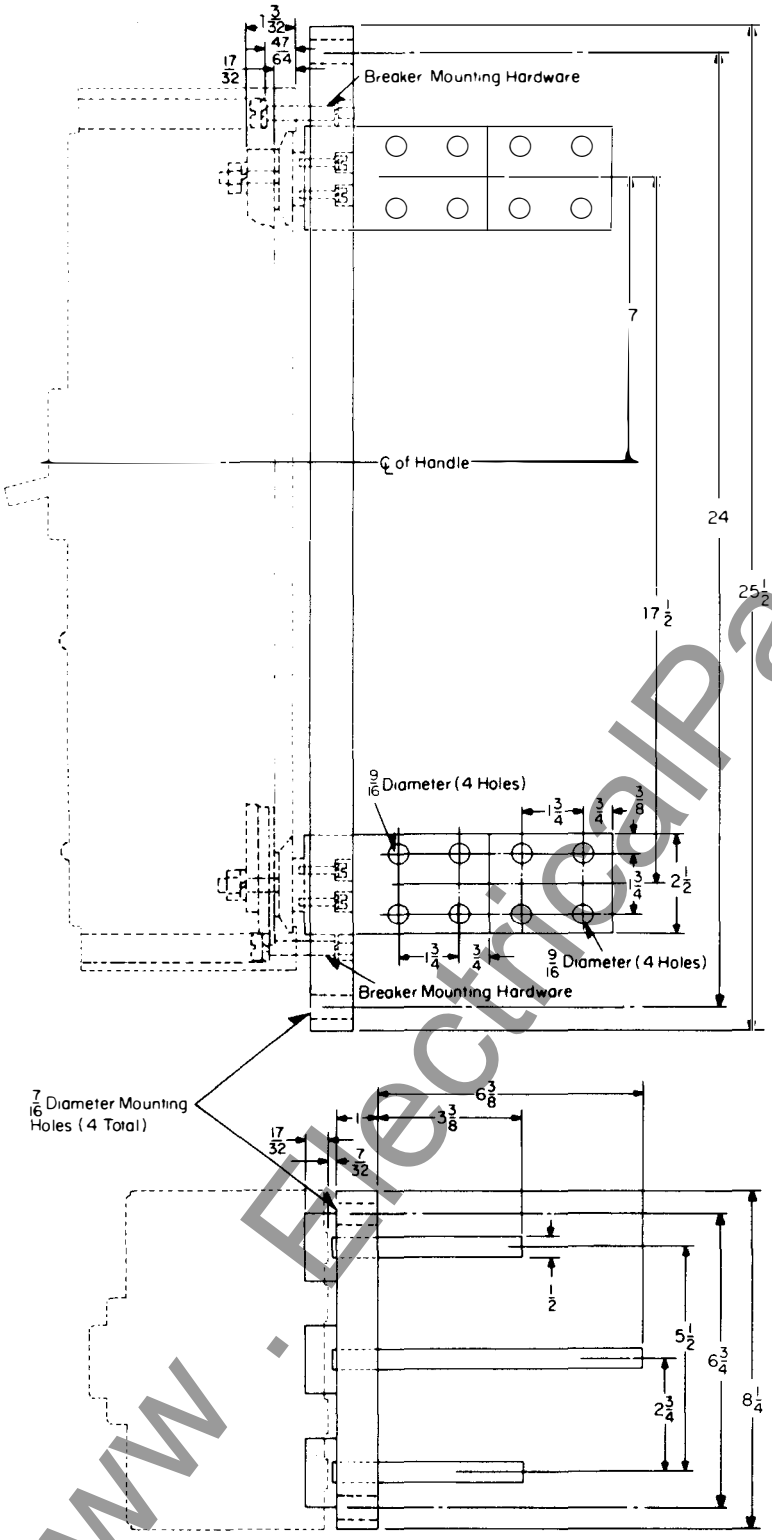

Reproduced From Drawing 4990D38

● Changed since previous issue.

Printed in USA

www . ElectricalPartManuals . com

Westinghouse Electric Corporation
Distribution and Control Business Unit
Electrical Components Division
Pittsburgh, Pennsylvania, U.S.A. 15220

June, 1988
Supersedes Dimension Sheet 29-170, pages 46.1-46.2, dated June, 1979
Mailed to: E, D, C/29-100A, 31-400A, 31-500A

Type FCL and LCL Current Limit-R Current Limiting Breakers

Page 46.1: Type FCL, 15-100 Amperes
Page 46.2: Type LCL, 125-400 Amperes

AB DE-ION® Circuit Breakers

Type FCL Current Limiting Breaker

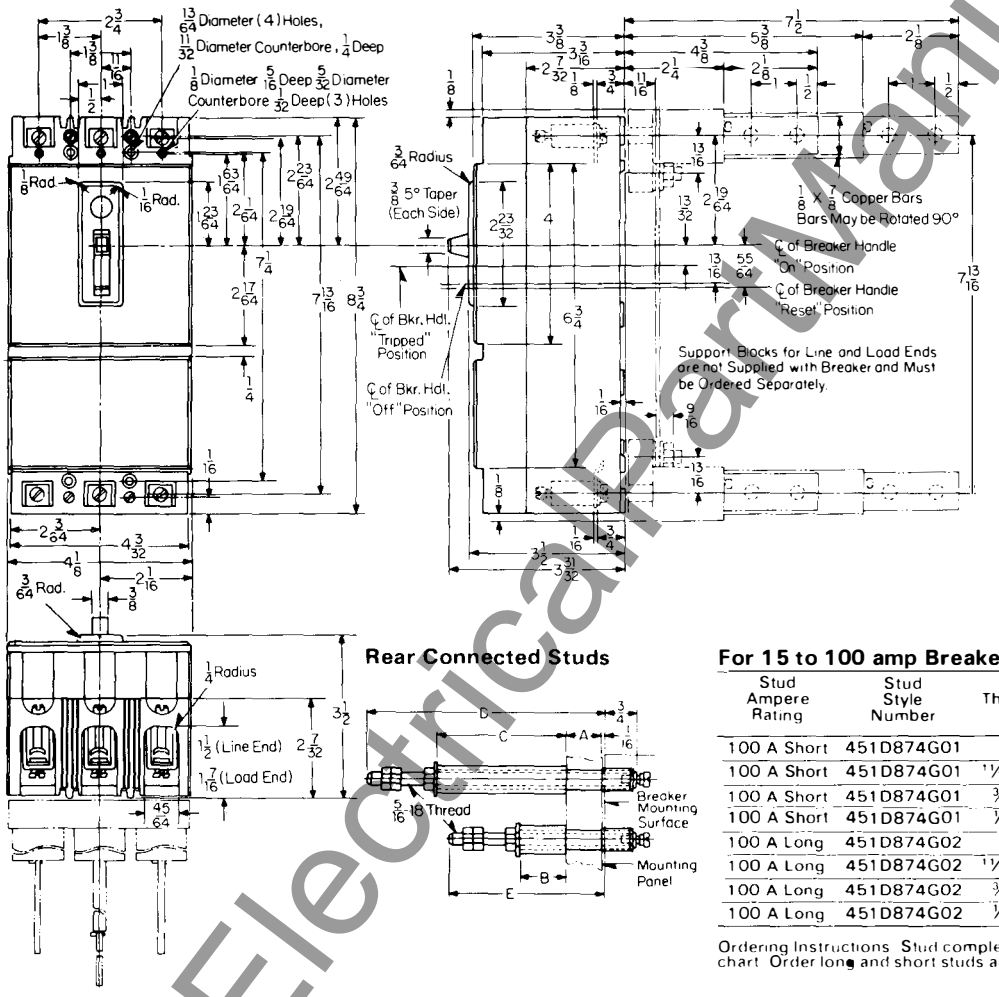

Terminal Arrangements

Wire Connection

Removable Connector UL Listed Wire Range 14 to 1/0CU 12 to 1/0AL Will Accomodate 14 to 3/0 Wire

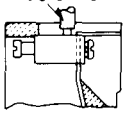

Stud Connection

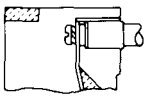

Plug-in or Bolt-on Connection

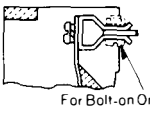

Bus Connection

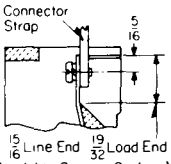

Plug-in
Bolt stab to breaker conductor, then plug into support block.

Bolt-on
Bolt stab to support block, then bolt support block assembly to breaker conductors.

For 15 to 100 amp Breakers

Stud Ampere Rating	Stud Style Number	Panel Thickness A	Tube Length B	Tube Length C	Tube Style Number	D	E
100 A Short	451D874G01	1"	1 1/16		32B9446H20		3 5/8
100 A Short	451D874G01	1 1/16 to 1 5/16	1 3/8		32B9446H21		
100 A Short	451D874G01	3/8 to 5/8	1 11/16		32B9446H22		
100 A Short	451D874G01	1/4 to 5/16	2		32B9446H23		
100 A Long	451D874G02	1"		3 7/16	32B9446H24	6 1/8	
100 A Long	451D874G02	1 1/16 to 1 5/16		3 3/4	32B9446H25		
100 A Long	451D874G02	3/8 to 5/8		4 1/16	32B9446H26		
100 A Long	451D874G02	1/4 to 5/16		4 3/8	32B9446H27		

Ordering Instructions Stud complete consists of one stud assembly and one tube as per chart Order long and short studs and tubes as required to obtain proper bus spacing

Drilling Plans

For Mounting Bolts

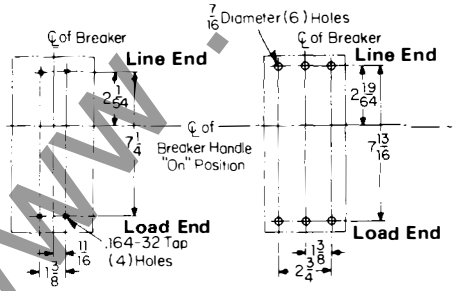

For Rear Connected Studs

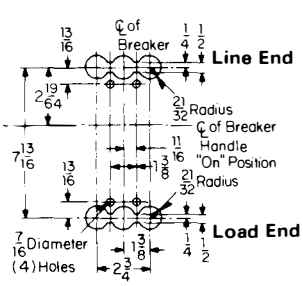

For Plug-in Block

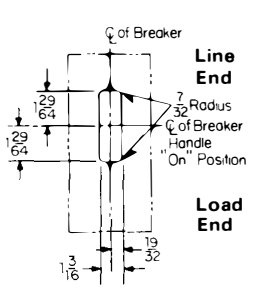

Front Cover Cutout

Reproduced From Drawing 2614D90

www.ElectricalPartManuals.com

Type LCL 400 Amp Frame Current Limiting Breaker

Terminal Arrangements

For Use With Cu/Al Cable (Supplied As Standard)

Single	TA225LA1	125-225	#6-350 MCM Cu or #4-350 MCM Al
Double	TA400LA1	250-400	#4-250 MCM Cu/Al Plus 3/0-600 MCM Cu/Al

For Use With Copper Cable Only (Must Be Specified)

Cable	Catalog Number	Ampere Rating	Wire Size
Single	T225LA	125-225	#6-350 MCM
Double	T401LA	250-400	4-250 and 3/0-600 MCM

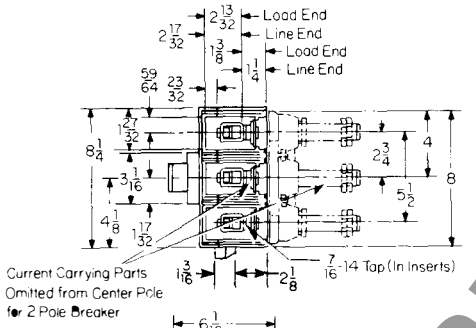

Rear Connected Studs

Stud Ampere Rating	Stud Style Number	Thread Size	Dimension A
125-225	1241345	½-13	3 3/16
125-225	1241392	½-13	4 15/16
125-225	1241346	½-13	6¼
250-400	05B7383G15	¾-16	5 15/32
250-400	05B7383G16	¾-16	7 31/32
250-400	05B7383G17	¾-16	10 15/32

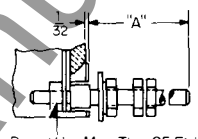

Do not Use More Than 25 Ft. Lbs. Torque to Tighten Nuts

Plug-in Adapter Kit

Poles	Ampere Rating	Kit Style Number	Thread Size
2	125-400	313C644G25	¾-16
3	125-400	313C644G26	¾-16

Do not Use More Than 25 Ft. Lbs. Torque to Tighten Nuts

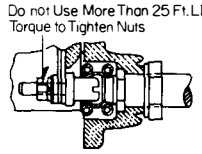

Line End

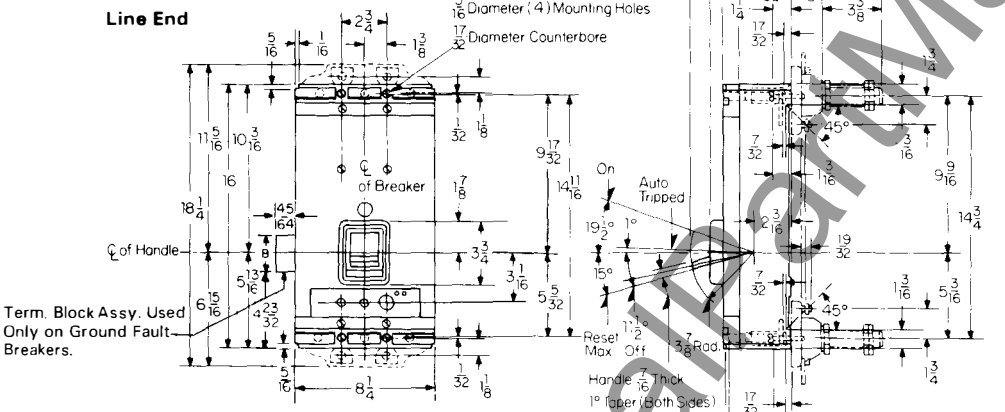

Load End

	Dim "B"
2 Terminal Unit	13/16
4 Terminal Unit	1 9/16

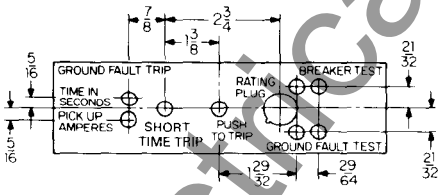

Nameplate (Used with Ground Fault Trip)

Drilling Plans

For Plug-In Block

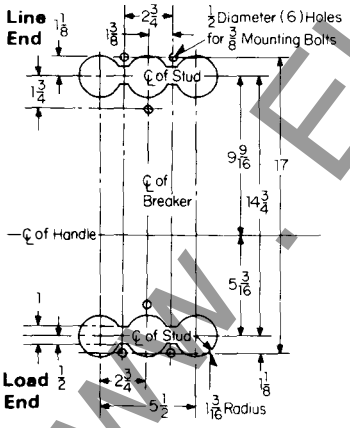

Rear Connected Studs
(For Non-Conductive Panels)

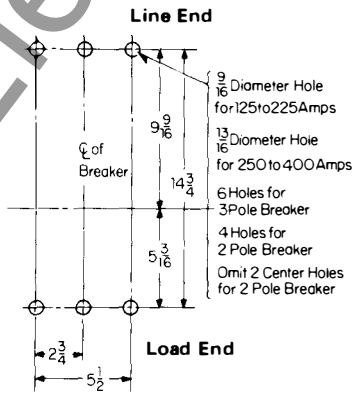

For Mounting Bolts

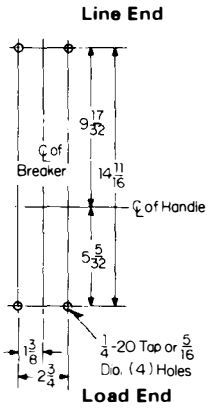

Front Cover Cutout

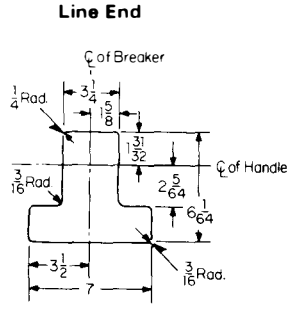

Reproduced From Drawing 1371D33

Westinghouse Electric Corporation
Distribution and Control Business Unit
Electrical Components Division
Pittsburgh, Pennsylvania, U.S.A. 15220

Printed in U.S.A.

www.ElectricalPartManuals.com

June, 1988
Supersedes Dimension Sheet 29-170, pages 53-54, dated October, 1977
Mailed to: E, D, C/29-100A, 31-400A, 31-500A

Motor Operators for Types JB, KB, LAB, LA, LC Circuit Breakers

Page 53: For Types JB, KB
Page 54: For Types LAB, LA, LC

AB DE-ION® Circuit Breakers

Motor Operators

JB, KB and HKB Breaker and Operator
(Assembled to Base Plate)

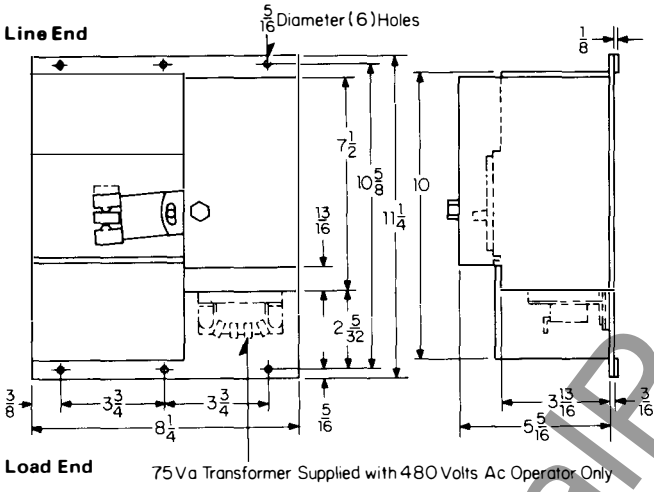

Motor Operator Only

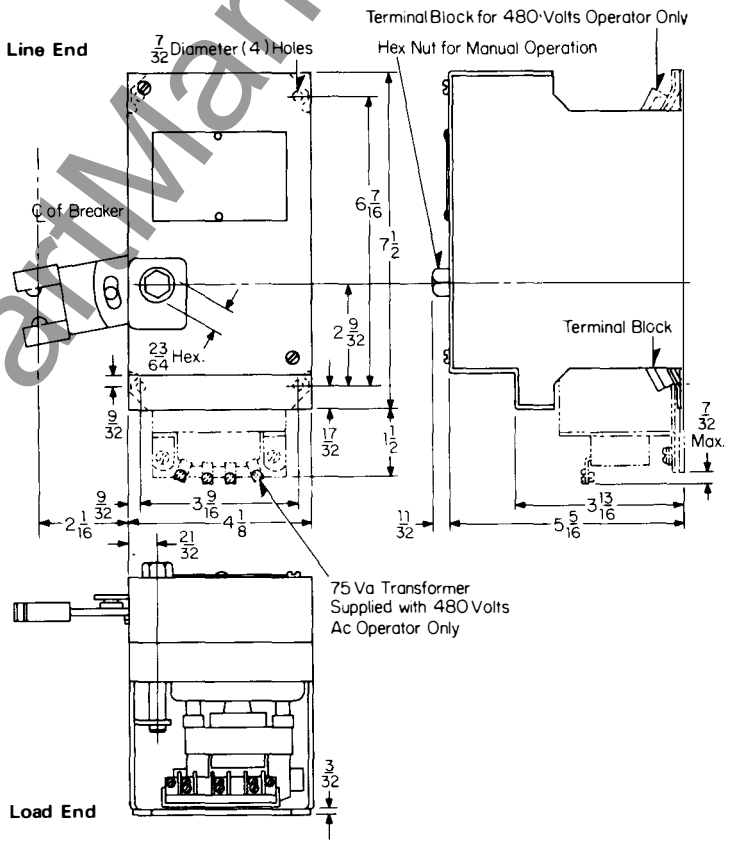

Drilling Plan

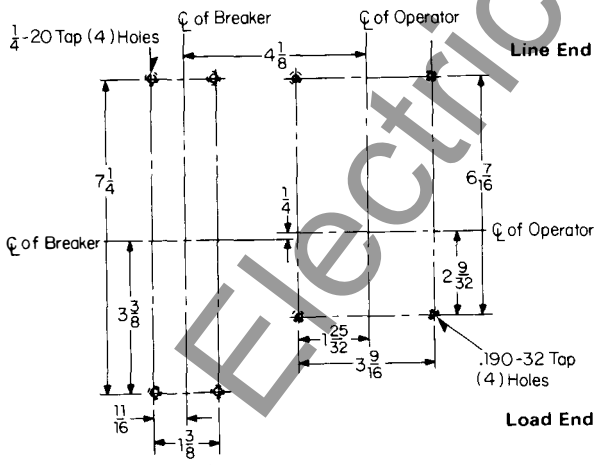

Reproduced From Drawing 1250C27

www.ElectricalPartManuals.com

Motor Operators for LAB, LA and LC Breakers

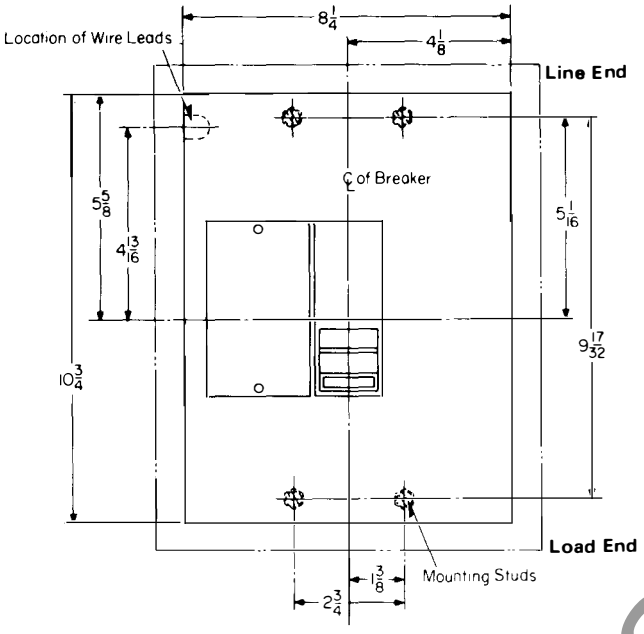

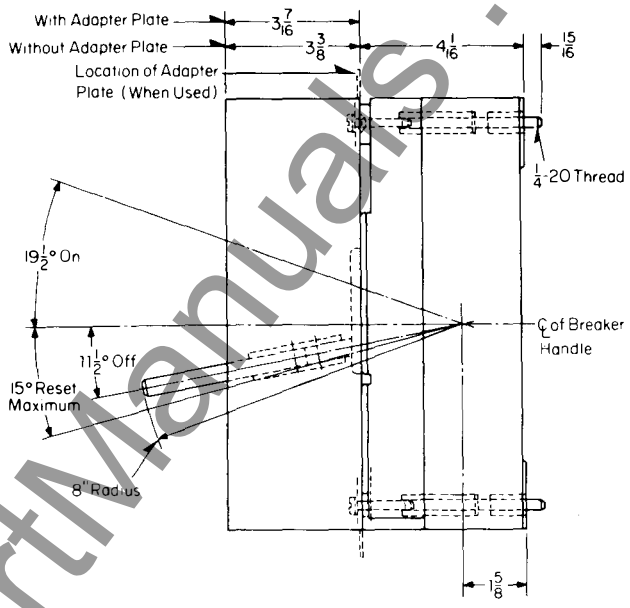

Drilling Plan and Cutout (Adapter Plate)

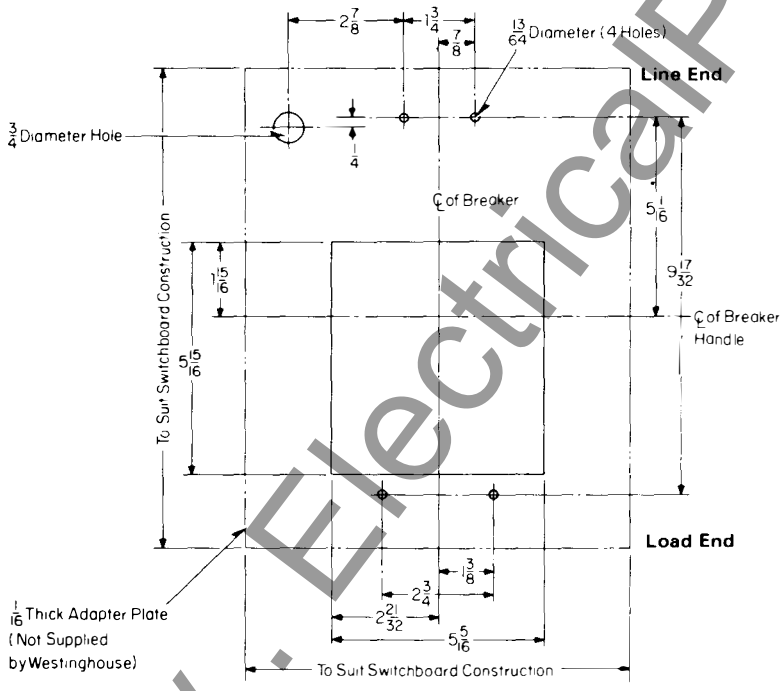

Reproduced From Drawing 5669D04

Westinghouse Electric Corporation
Distribution and Control Business Unit
Electrical Components Division
Pittsburgh, Pennsylvania, U.S.A. 15220

Printed in U.S.A.

www.ElectricalPartManuals.com

June 1995
New Information
Mailed to: E, D, C/29-100A, 31-400A, 31-500A

Type GD Circuit Breakers

Page 1: Type GD One-Pole
Page 2: Type GD Two-Pole

Series C® Molded Case Circuit Breakers G-Frame 15-100 Amperes

Type GD One-Pole Only

Suitable for Cable Mounting, Line and Load

Terminal, Line and Load Side

Type Terminal	Breaker Amperes	Wire Type and Size
Clamp and Binding Screw	15-20	#14-#10 Cu/Al
Pressure Collar	25-100	#10-1/0 Cu/Al

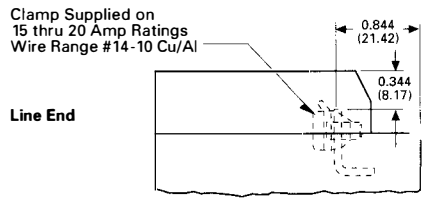

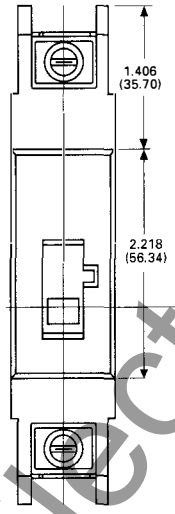

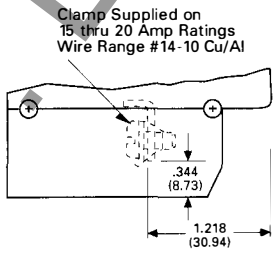

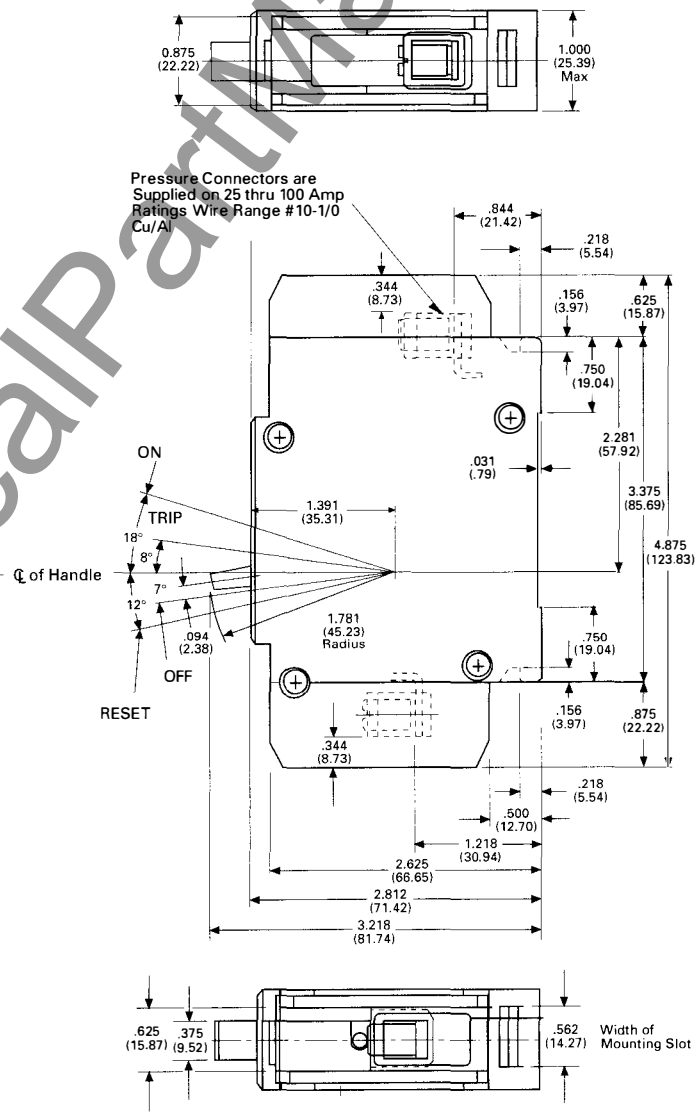

Reproduced from drawing 1374D14

Dimensions in parentheses in millimeters

www.ElectricalPartManuals.com

Series C Molded Case Circuit Breakers, G-Frame, 15-100 Amperes

Type GD Two-Pole Only

Suitable for Cable Mounting, Line and Load

Terminals, Load and Load Side

Type Terminal	Breaker Amperes	Wire Type and Size
Clamp and Binding Screw	15-20	#14-#10 Cu/Al
Pressure Collar	25-100	#10-1/0 Cu/Al

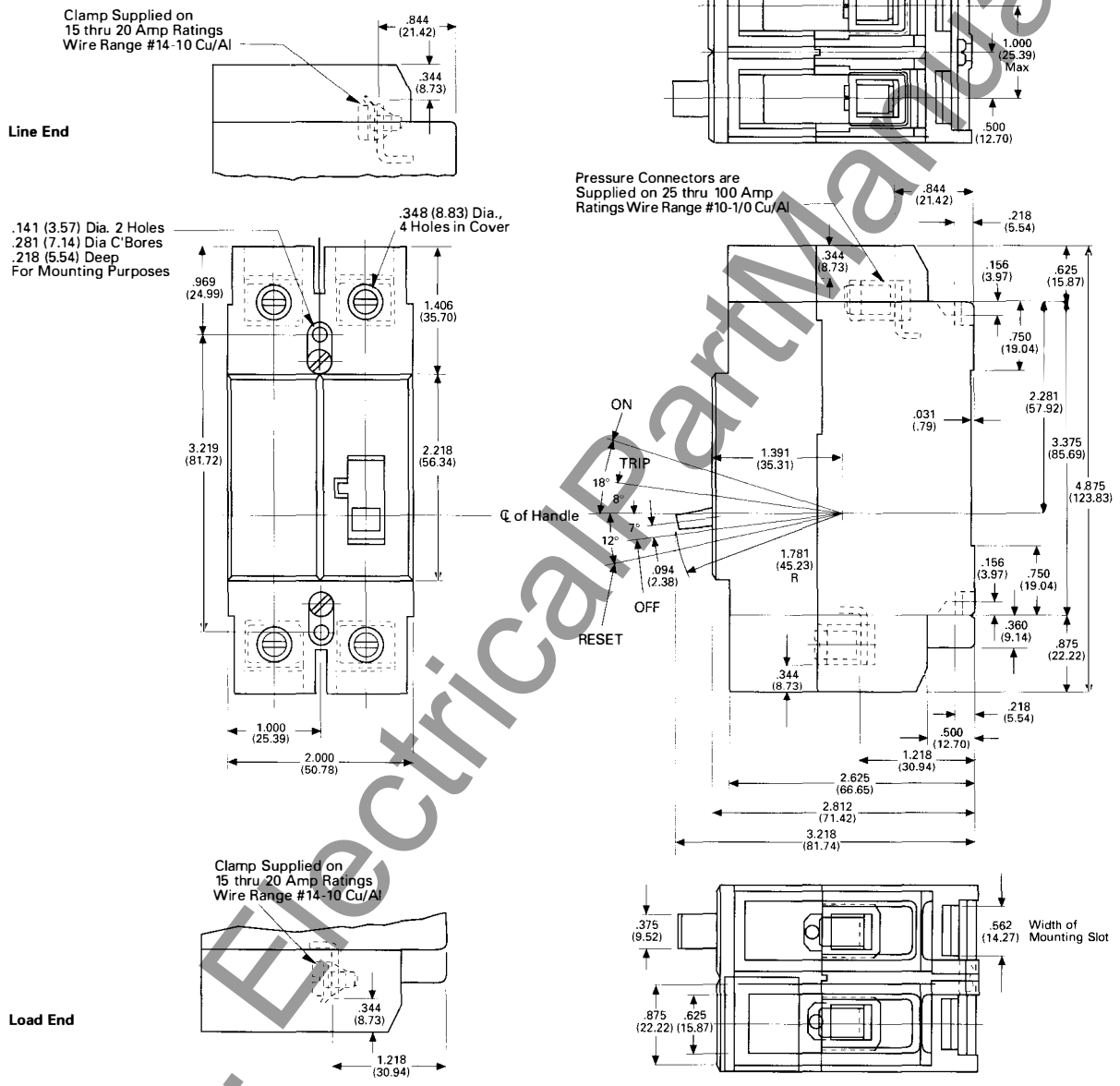

Reproduced from drawing 1374D15

Dimensions in parentheses in millimeters

Cutler-Hammer
Westinghouse & Cutler-Hammer Products
Five Parkway Center
Pittsburgh, Pennsylvania, U.S.A. 15220

Printed in U.S.A.

June 1995

www.ElectricalPartManuals.com

June 1995
New Information
Mailed to: E, D, C/29-100A, 31-400A, 31-500A

Types GD, GDB Bolt-On Panelboard Circuit Breakers

Page 3: Type GD Three-Pole
Page 4: Type GDB Bolt-On One-Pole

Series C® Molded Case Circuit Breakers G-Frame 15-100 Amperes

Type GD Three-Pole Only

Terminals, Load and Load Side

Type Terminal	Breaker Amperes	Wire Type and Size
Clamp and Binding Screw	15-20	#14-#10 Cu/Al
Pressure Collar	25-100	#10-1/0 Cu/Al

Suitable for Cable Mounting, Line and Load

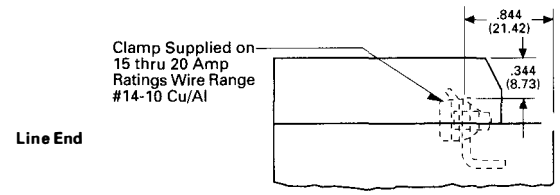

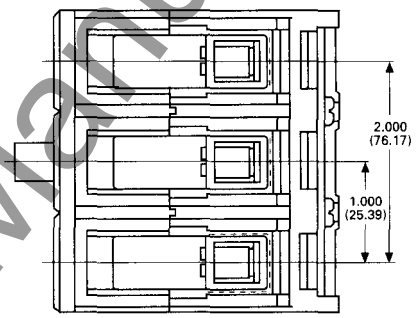

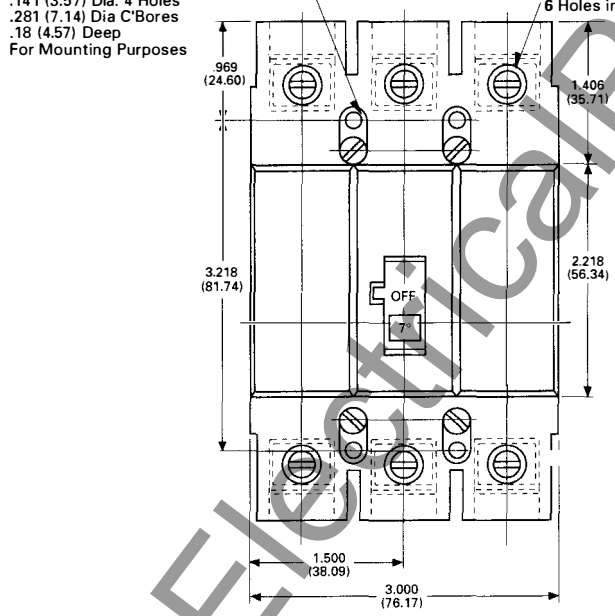

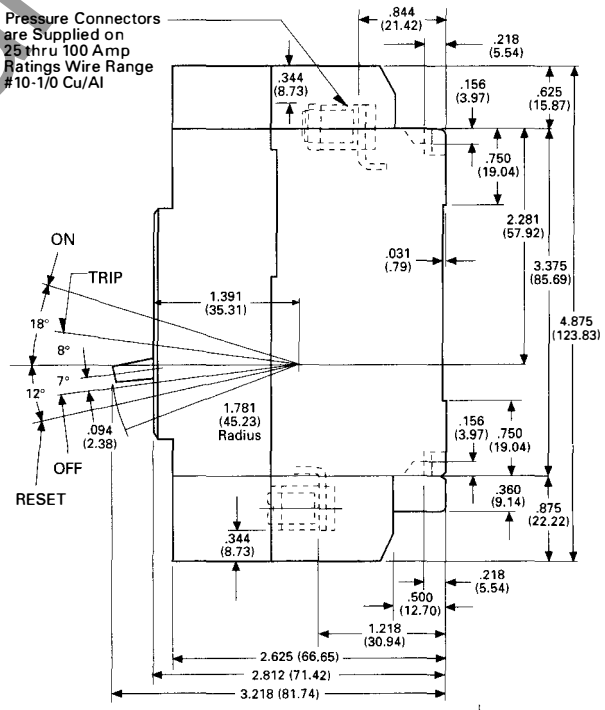

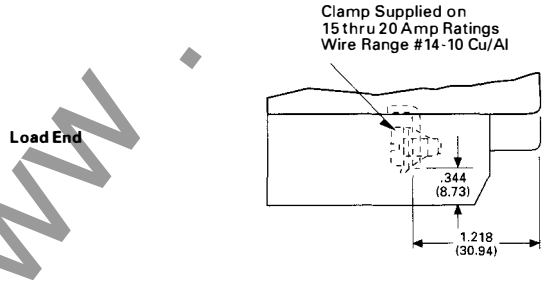

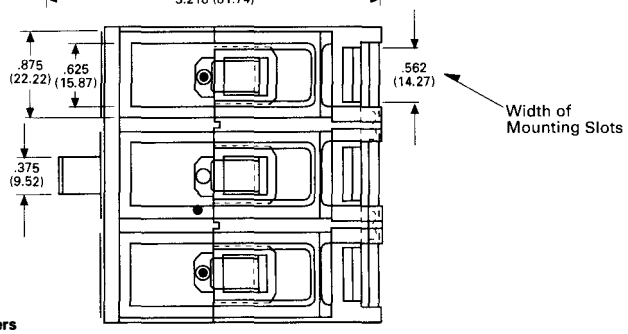

Reproduced from drawing 1374D16

Dimensions in parentheses in millimeters

www . ElectricalPartManuals . com

Series C Molded Case Circuit Breakers, G-Frame, 15-100 Amperes

Type GDB Bolt-On One-Pole Only

Terminals, Load Side Only

Type Terminal	Breaker Amperes	Wire Type and Size
Clamp	15-20	#14-#10 Cu/Al
Pressure	25-100	#10-1/0 Cu/Al

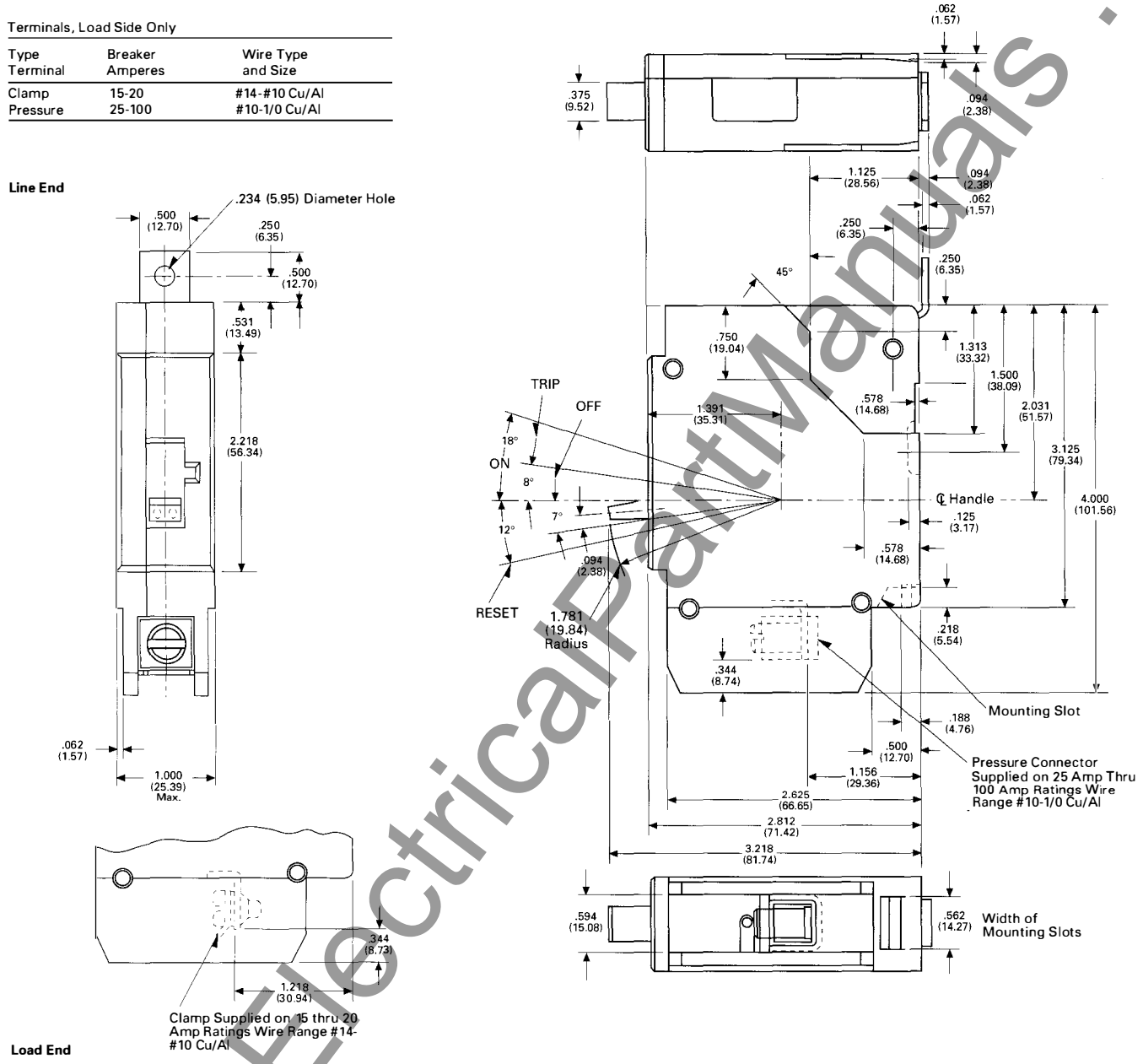

Reproduced from drawing 1372D97 **Dimensions in parentheses in millimeters**

Cutler-Hammer
Westinghouse & Cutler-Hammer Products
Five Parkway Center
Pittsburgh, Pennsylvania, U.S.A. 15220

Printed in U.S.A.

June 1995

www.ElectricalPartManuals.com

June 1995
New Information
Mailed to: E, D, C/29-100A, 31-400A, 31-500A

Type GDB Bolt-On Panelboard Circuit Breakers

Page 5: Type GDB Bolt-On Two-Pole
Page 6: Type GDB Bolt-On Three-Pole

Series C® Molded Case Circuit Breakers G-Frame 15-100 Amperes

Type GDB Bolt-On Two-Pole Only

Terminals, Load Side Only

Type Terminal	Breaker Amperes	Wire Type and Size
Clamp	15-20	#14-#10 Cu/Al
Pressure	25-100	#10-1/0 Cu/Al

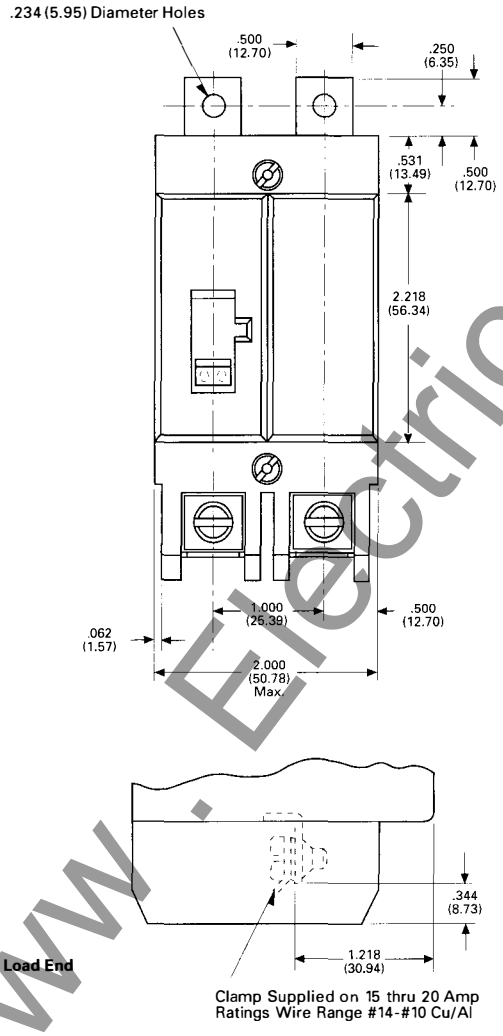

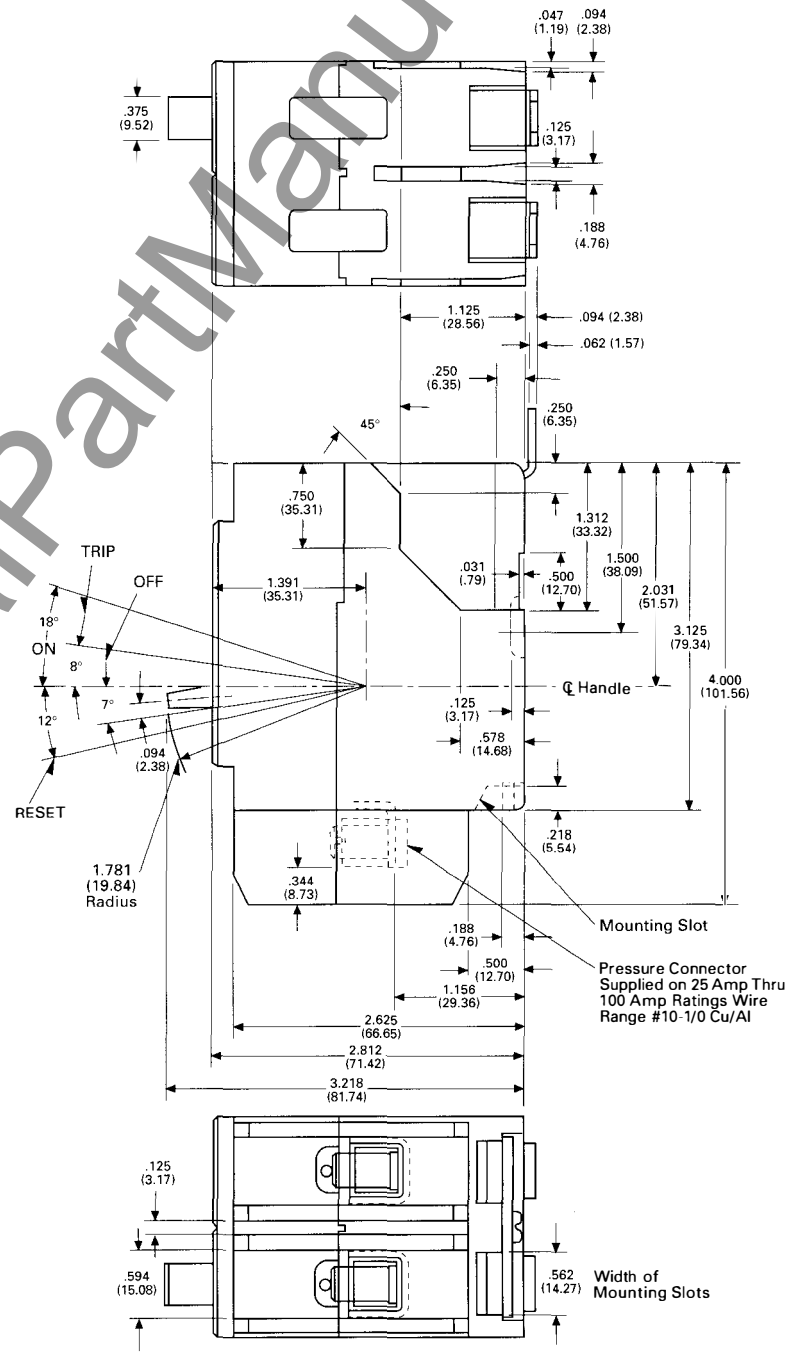

Reproduced from drawing 1373D57

Dimensions in parentheses in millimeters

www.ElectricalPartManuals.com

Series C Molded Case Circuit Breakers, G-Frame, 15-100 Amperes

Type GDB Bolt-On Three-Pole Breakers

Terminals, Load Side Only

Type Terminal	Breaker Amperes	Wire Type and Size
Clamp	15-20	#14-#10 Cu/Al
Pressure	25-100	#10-1/0 Cu/Al

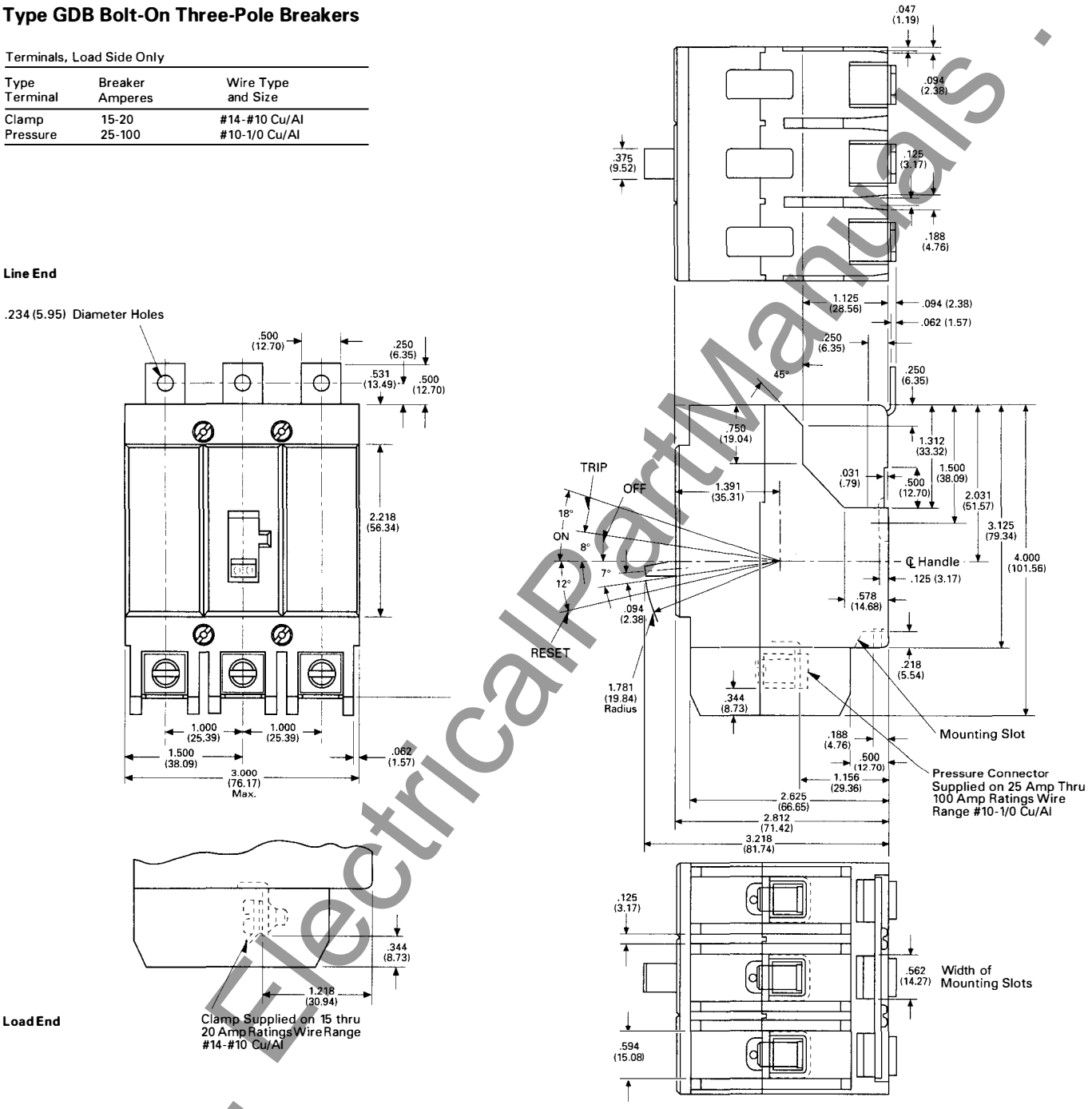

Reproduced from drawing 1370D84

Dimensions in parentheses in millimeters

Cutler-Hammer
Westinghouse & Cutler-Hammer Products
Five Parkway Center
Pittsburgh, Pennsylvania, U.S.A. 15220

Printed in U.S.A.

June 1995

www.ElectricalPartManuals.com

June 1995
New Information
Mailed to: E, D, C/29-100A, 31-400A, 31-500A

Types GC, GHC Circuit Breakers

Page 7: Types GC, GHC One-Pole
Page 8: Types GC, GHC Two-Pole

Series C® Molded Case Circuit Breakers G-Frame 15-100 Amperes

Types GC, GHC One-Pole Only

Suitable for Cable Mounting, Line and Load

Terminals, Line and Load Side

Type Terminal	Breaker Amperes	Wire Type and Size
Clamp and Binding Screw	15-20	#14-#10 Cu/Al
Pressure Collar	25-100	#10-1/0 Cu/Al

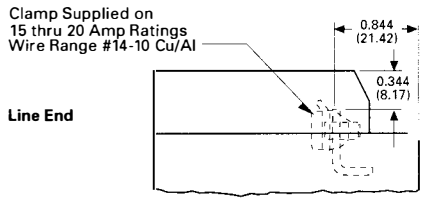

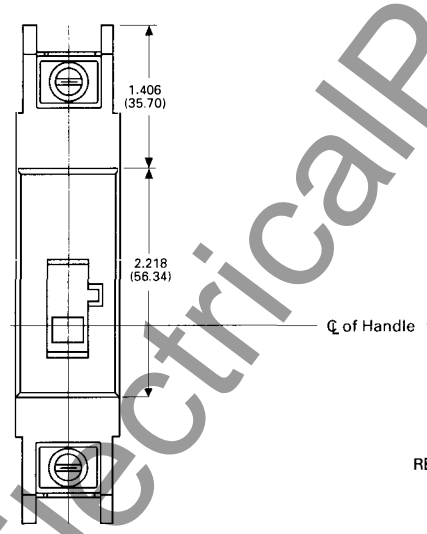

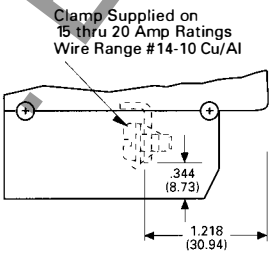

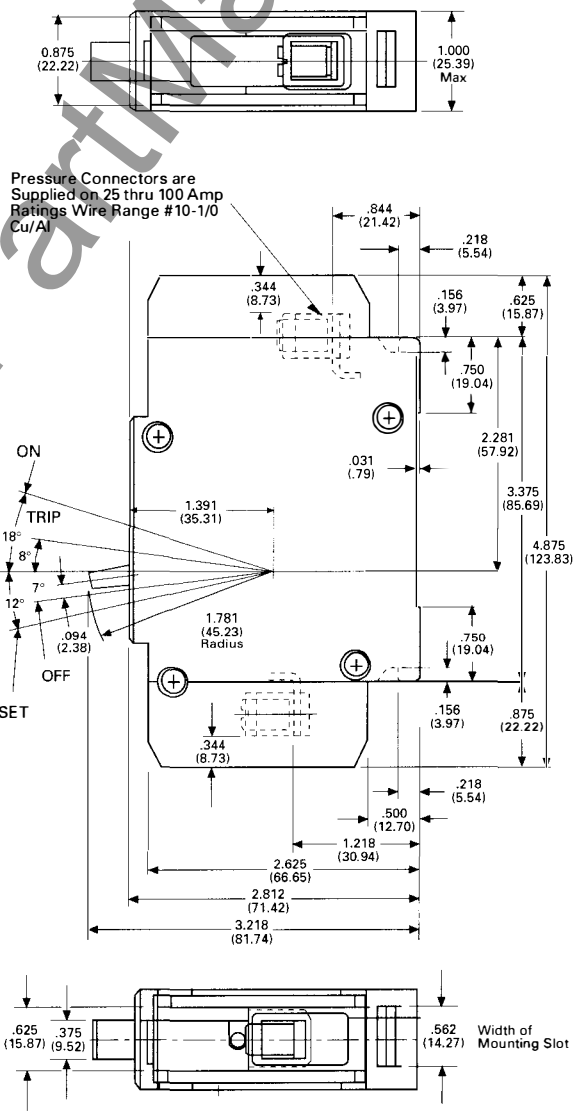

Reproduced from drawing 1374D14

Dimensions in parentheses in millimeters

www.ElectricalPartManuals.com

Series C Molded Case Circuit Breakers, G-Frame, 15-100 Amperes

Types GC, GHC Two-Pole Only

Suitable for Cable Mounting, Line and Load

Terminals, Load and Load Side

Type Terminal	Breaker Amperes	Wire Type and Size
Clamp and Binding Screw	15-20	#14-#10 Cu/Al
Pressure Collar	25-100	#10-1/0 Cu/Al

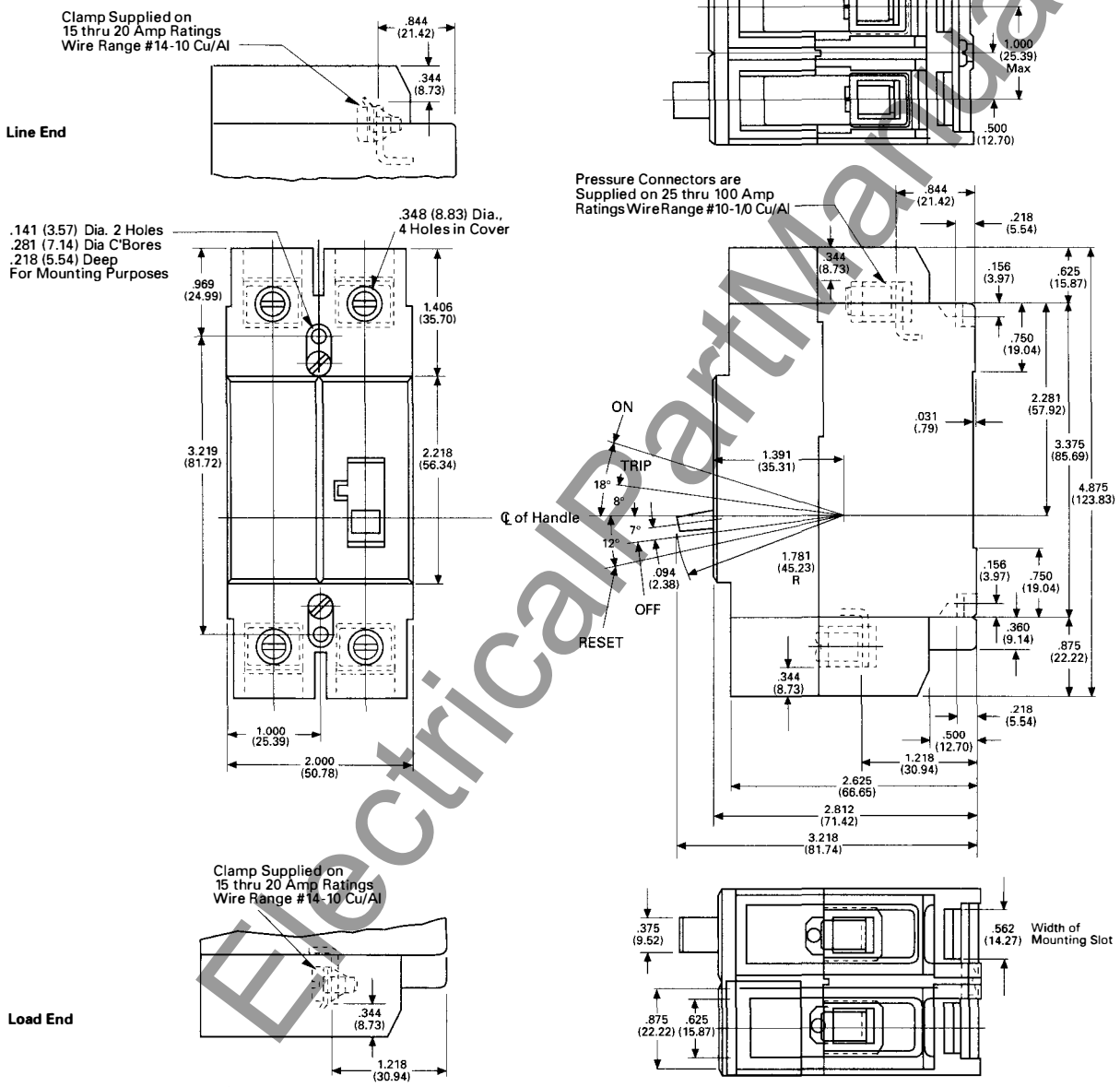

Reproduced from drawing 1374D15

Dimensions in parentheses in millimeters

Cutler-Hammer
Westinghouse & Cutler-Hammer Products
Five Parkway Center
Pittsburgh, Pennsylvania, U.S.A. 15220

www.ElectricalPartManuals.com

June 1995
New Information
Mailed to: E, D, C/29-100A, 31-400A, 31-500A

Types GC, GHC and GB, GHB
Circuit Breakers

Page 9: Types GC, GHC Three-Pole
Page 10: Types GB, GHB One-Pole

Series C® Molded Case Circuit Breakers G-Frame 15-100 Amperes

Types GC, GHC Three-Pole Only

Terminals, Load and Load Side

Type Terminal	Breaker Amperes	Wire Type and Size
Clamp and Binding Screw	15-20	#14-#10 Cu/Al
Pressure Collar	25-100	#10-1/0 Cu/Al

Suitable for Cable Mounting, Line and Load

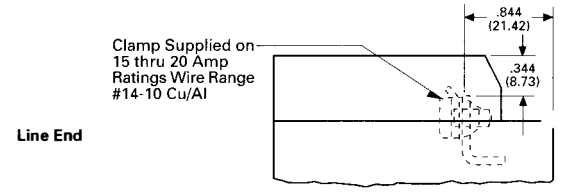

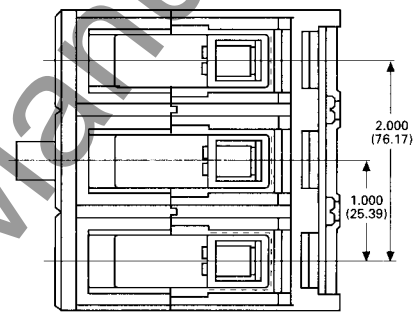

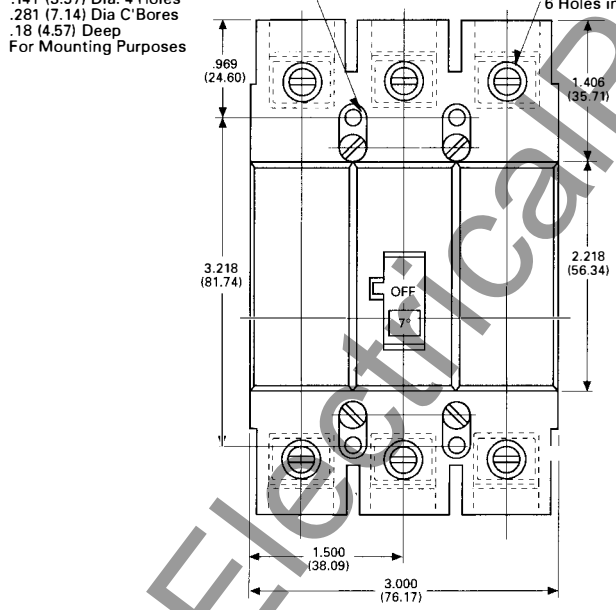

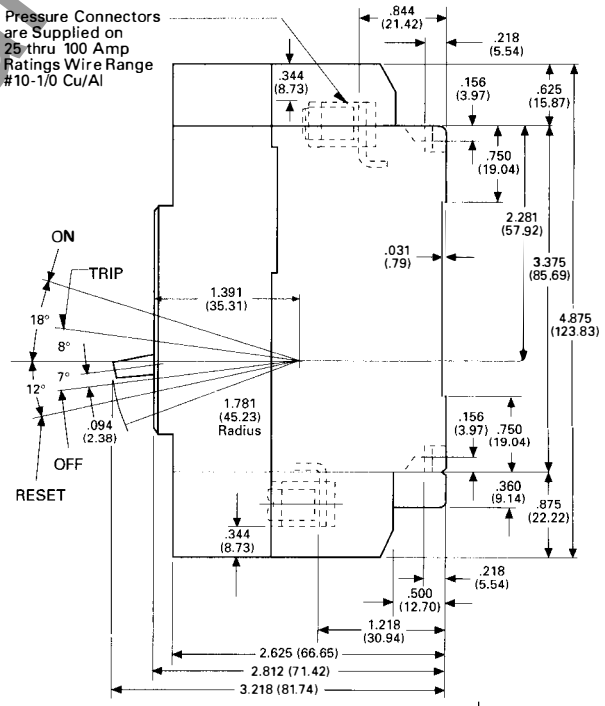

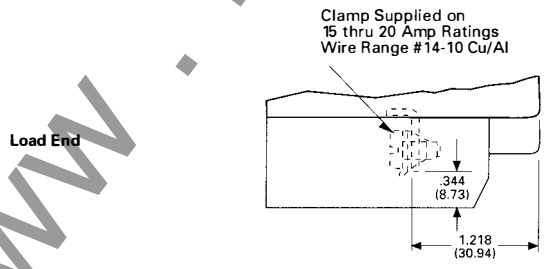

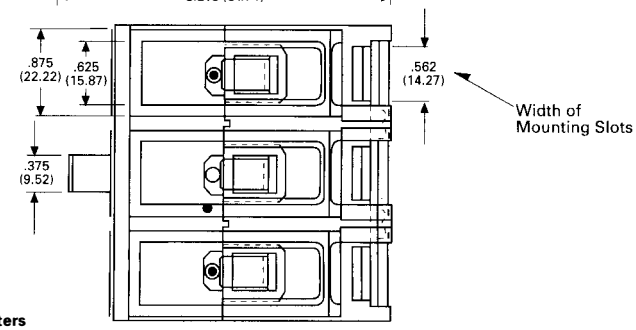

Reproduced from drawing 1374D16

Dimensions in parentheses in millimeters

www . ElectricalPartManuals . com

Series C Molded Case Circuit Breakers, G-Frame, 15-100 Amperes

Types GB, GHB Bolt-On One-Pole Only

Terminals, Load Side Only

Type Terminal	Breaker Amperes	Wire Type and Size
Clamp	15-20	#14-#10 Cu/Al
Pressure	25-100	#10-1/0 Cu/Al

Line End

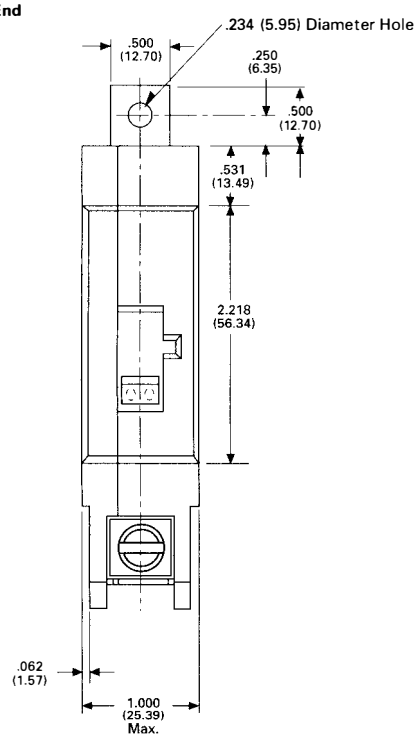

Load End

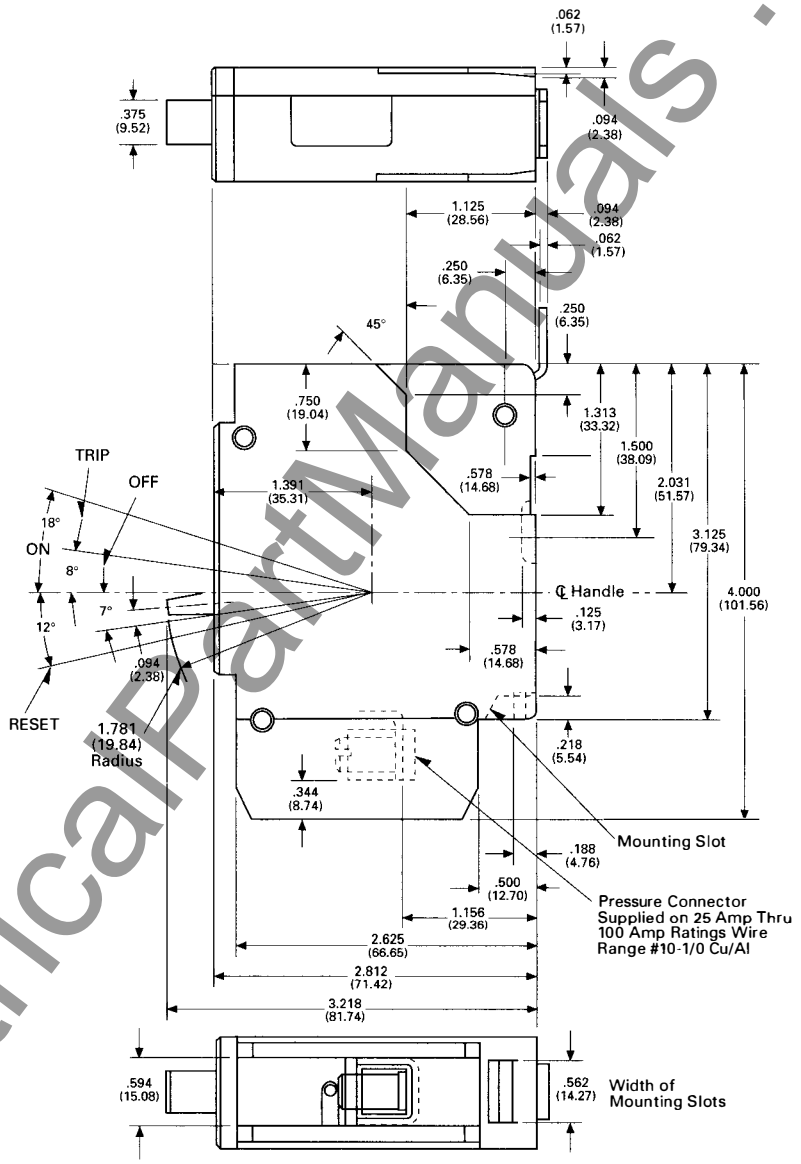

Reproduced from drawing 1372D97 **Dimensions in parentheses in millimeters**

Cutler-Hammer
Westinghouse & Cutler-Hammer Products
Five Parkway Center
Pittsburgh, Pennsylvania, U.S.A. 15220

Printed in U.S.A.

June 1995

www.ElectricalPartManuals.com

June 1995
New Information
Mailed to: E, D, C/29-100A, 31-400A, 31-500A

Types GB, GHB Bolt-On Panelboard Circuit Breakers

Page 11: Types GB, GHB Bolt-On Two-Pole
Page 12: Types GB, GHB Bolt-On Three-Pole

Series C® Molded Case Circuit Breakers G-Frame 15-100 Amperes

Types GB, GHB Bolt-On Two-Pole Only

Terminals, Load Side Only

Type Terminal	Breaker Amperes	Wire Type and Size
Clamp	15-20	#14-#10 Cu/Al
Pressure	25-100	#10-1/0 Cu/Al

Line End

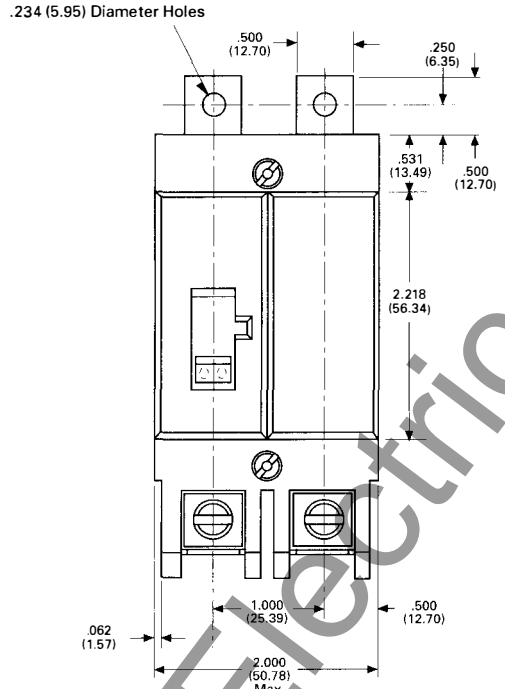

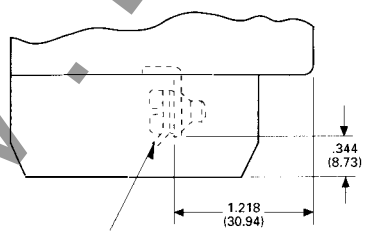

Load End

Clamp Supplied on 15 thru 20 Amp Ratings Wire Range #14-#10 Cu/Al

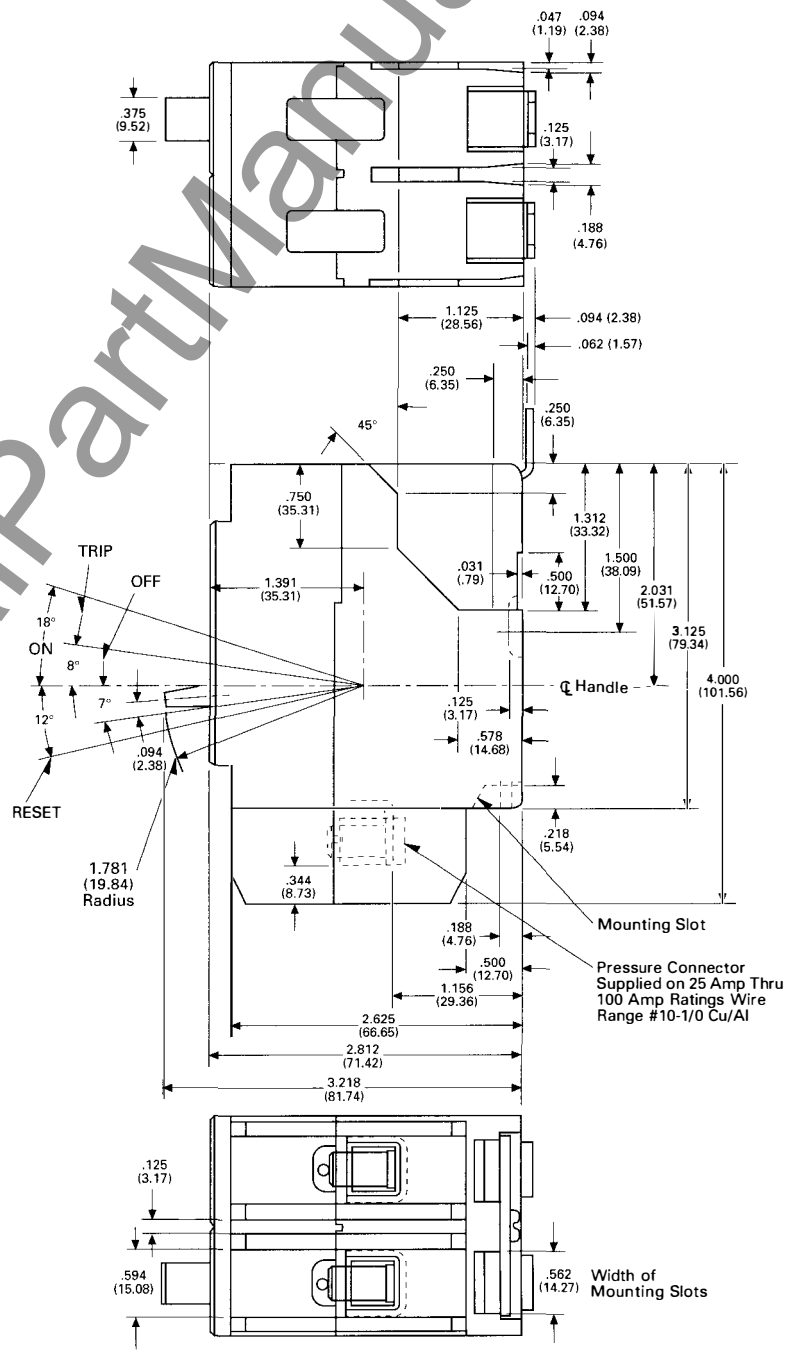

Reproduced from drawing 1373D57

Dimensions in parentheses in millimeters

www.ElectricalPartManuals.com

Series C Molded Case Circuit Breakers, G-Frame, 15-100 Amperes

Types GB, GHB Bolt-On Three-Pole Breakers

Terminals, Load Side Only

Type Terminal	Breaker Amperes	Wire Type and Size
Clamp	15-20	#14-#10 Cu/Al
Pressure	25-100	#10-1/0 Cu/Al

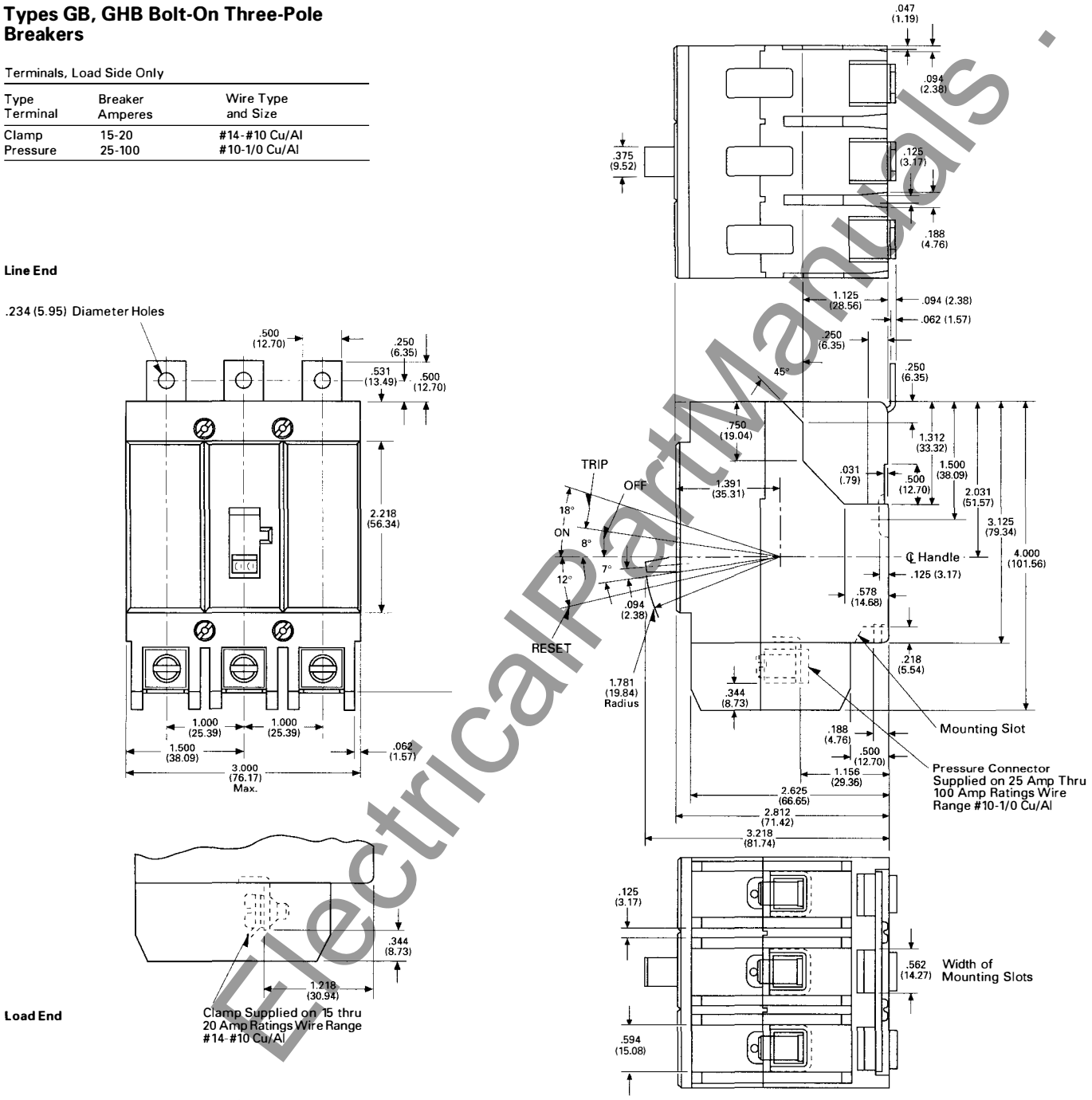

Reproduced from drawing 1370D84

Dimensions in parentheses in millimeters

Cutler-Hammer
Westinghouse & Cutler-Hammer Products
Five Parkway Center
Pittsburgh, Pennsylvania, U.S.A. 15220

Printed in U.S.A.

June 1995

www.ElectricalPartManuals.com

Cutler-Hammer
Westinghouse &
Cutler-Hammer Products
Five Parkway Center
Pittsburgh, Pennsylvania, U.S.A. 15220

January 1995
New Information
Mailed to: E, D, C/29-100A, 31-400A, 31-500A

Type FD One-Pole

Westinghouse Series C® Molded Case Circuit Breakers F-Frame 10-225 Amperes

Type FD One-Pole Outline

Front View

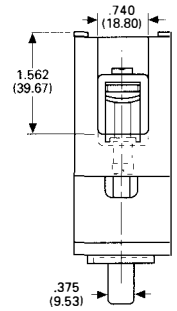

Line End

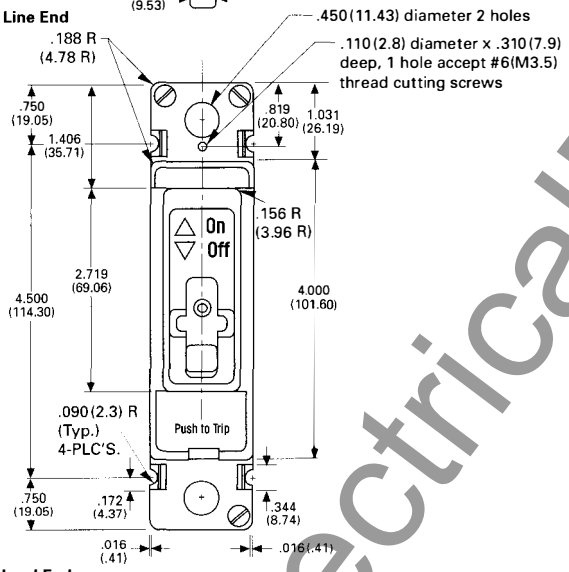

Load End

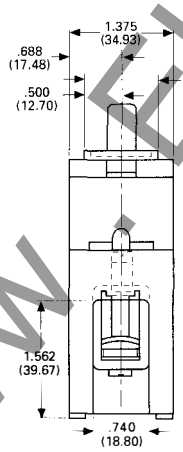

Side View

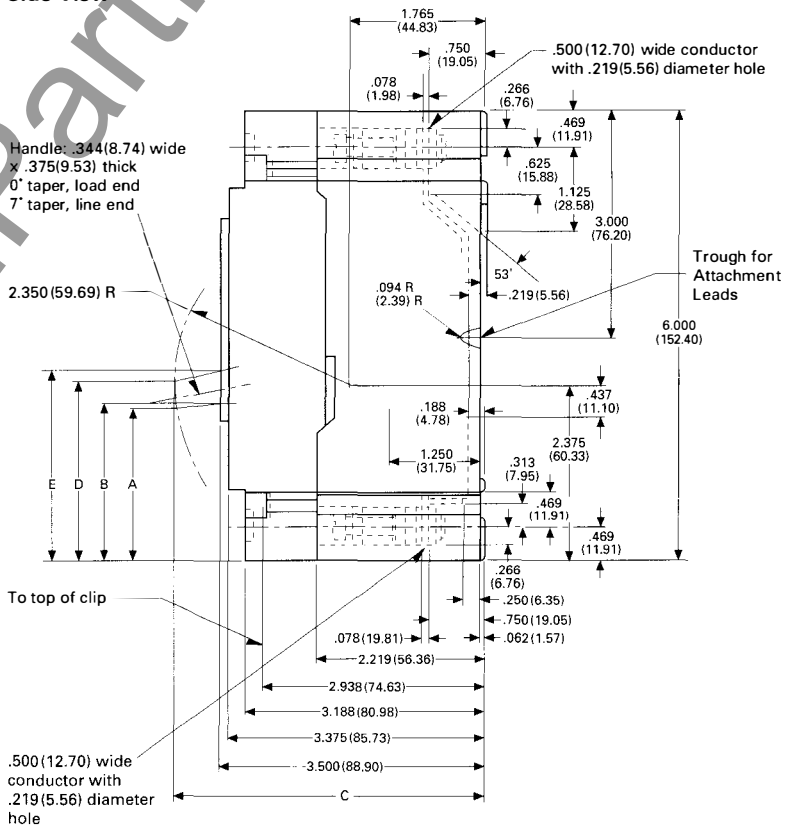

Breaker Status	Dimensions A	B	C	D	E	Handle Force, Lbs.●
On	3.07 (77.98)	2.92 (74.17)	3.96 (100.58)	3.40 (86.36)	3.33 (84.58)	8 (3.63 kgs.)
Tripped	2.65 (67.31)	2.57 (65.28)	4.06 (103.12)	2.99 (75.94)	2.98 (75.69)	3② (1.36 kgs.)
Off	2.08 (52.83)	2.14 (54.36)	4.12 (104.65)	2.42 (61.47)	2.56 (65.02)	9 (4.08 kgs.)
Reset	1.98 (50.29)	2.05 (52.07)	4.11 (104.39)	2.30 (58.42)	2.48 (63.10)	10 (4.54 kgs.)

① Measured .125 (3.175) above Escutcheon.
② Applied by breaker handle to external handle mechanism.

Reproduced from drawings 1490D61 and 1490D65

Dimensions in parentheses in millimeters

www.ElectricalPartManuals.com

Westinghouse Series C® Molded Case Circuit Breakers, F-Frame, 10-225 Amperes

Type FD One-Pole Outline

Front Cover Cutout

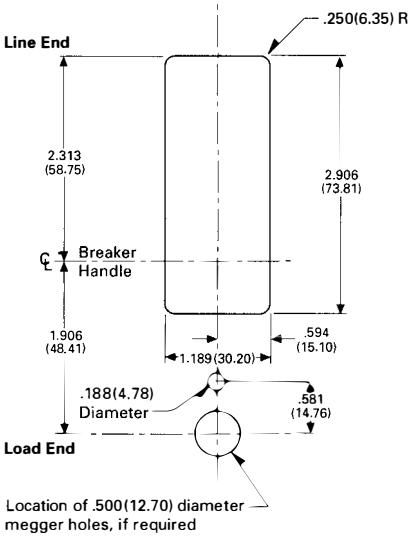

Drilling Plans

Front Connected

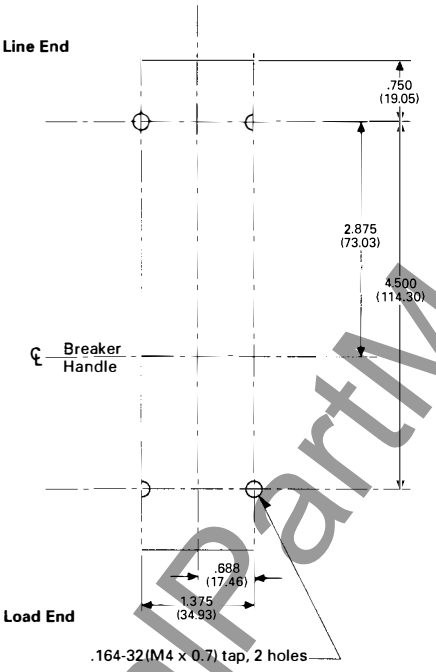

Rear Connected

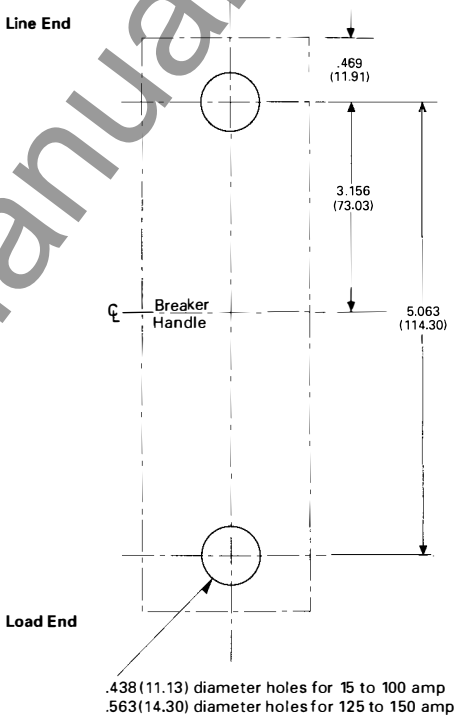

Reproduced from drawings 1490D61 and 1490D65

Dimensions in parentheses in millimeters

Cutler-Hammer
Westinghouse &
Cutler-Hammer Products
Five Parkway Center
Pittsburgh, Pennsylvania, U.S.A. 15220

Printed in U.S.A.
January 1995

www.ElectricalPartManuals.com

Cutler-Hammer
Westinghouse &
Cutler-Hammer Products
Five Parkway Center
Pittsburgh, Pennsylvania, U.S.A. 15220

January 1995
New Information
Mailed to: E, D, C/29-100A, 31-400A, 31-500A

Type FD Two-Pole

Westinghouse Series C® Molded Case Circuit Breakers F-Frame 10-225 Amperes

Type FD Two-Pole Outline

Front View

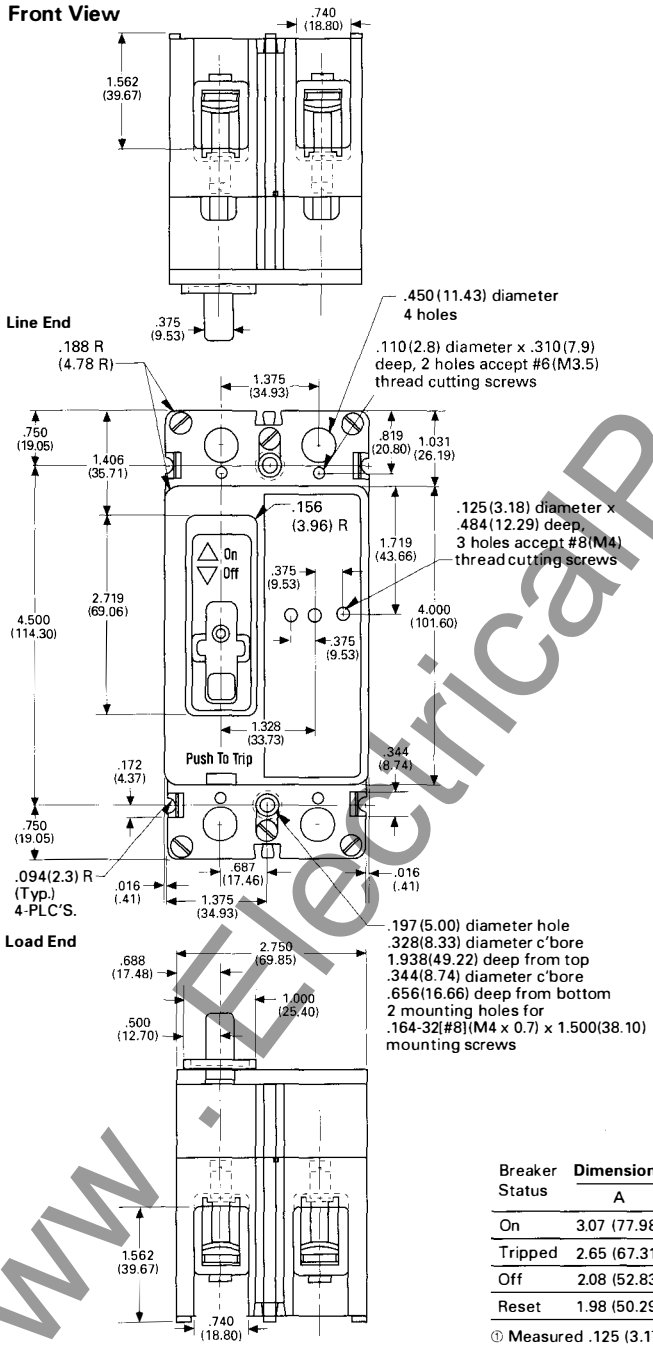

Side View

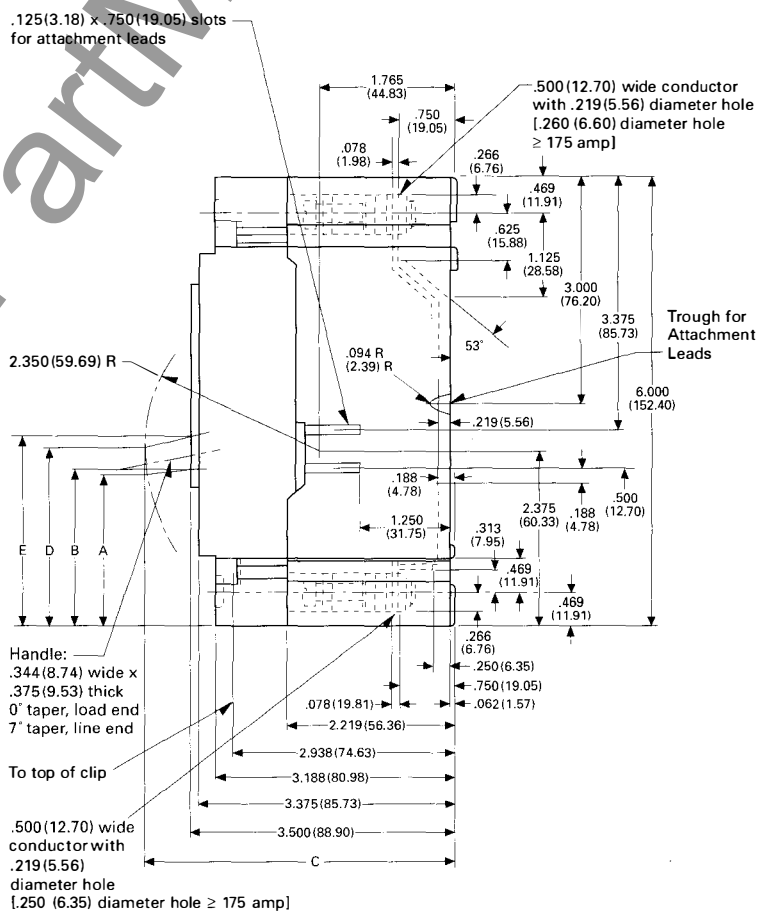

Breaker Status	Dimensions A	B	C	D	E	Handle Force, Lbs.①
On	3.07 (77.98)	2.92 (74.17)	3.96 (100.58)	3.40 (86.36)	3.33 (84.58)	12 (5.44 kgs.)
Tripped	2.65 (67.31)	2.57 (65.28)	4.06 (103.12)	2.99 (75.94)	2.98 (75.69)	4② (1.81 kgs.)
Off	2.08 (52.83)	2.14 (54.36)	4.12 (104.65)	2.42 (61.47)	2.56 (65.02)	15 (6.80 kgs.)
Reset	1.98 (50.29)	2.05 (52.07)	4.11 (104.39)	2.30 (58.42)	2.48 (63.10)	20 (9.07 kgs.)

① Measured .125 (3.175) above Escutcheon.
② Applied by breaker handle to external handle mechanism.

Reproduced from drawings 1490D62 and 1490D66

Dimensions in parentheses in millimeters

www.ElectricalPartManuals.com

Westinghouse Series C® Molded Case Circuit Breakers, F-Frame, 10-225 Amperes

Type FD Two-Pole Outline

Front Cover Cutout

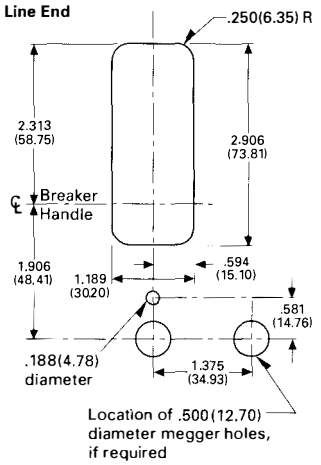

Drilling Plans

Front Connected

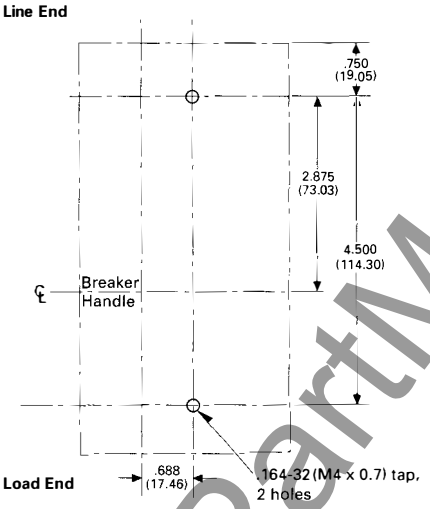

Rear Connected

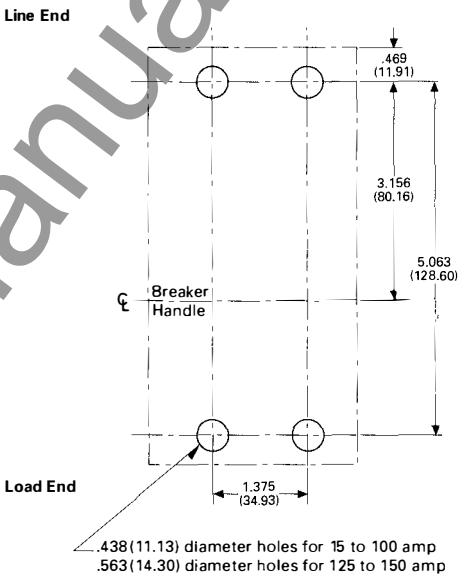

Reproduced from drawings 1490D62 and 1490D66

Dimensions in parentheses in millimeters

Cutler-Hammer
Westinghouse &
Cutler-Hammer Products
Five Parkway Center
Pittsburgh, Pennsylvania, U.S.A. 15220

Printed in U.S.A.

January 1995

www.ElectricalPartManuals.com

Cutler-Hammer
Westinghouse &
Cutler-Hammer Products
Five Parkway Center
Pittsburgh, Pennsylvania, U.S.A. 15220

Westinghouse Series C® Molded Case Circuit Breakers F-Frame 10-225 Amperes

January 1995
New Information
Mailed to: E, D, C/29-100A, 31-400A, 31-500A

Type FD Three-Pole

Type FD Three-Pole Outline

Front View

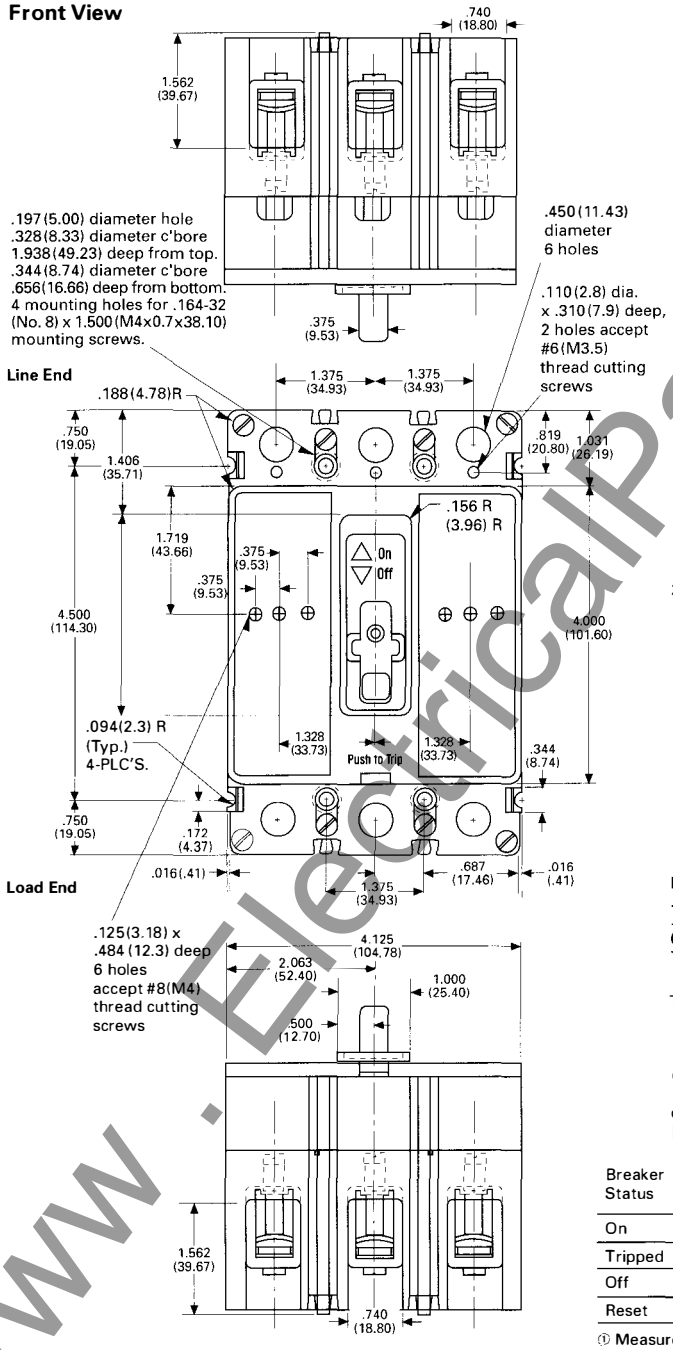

Side View

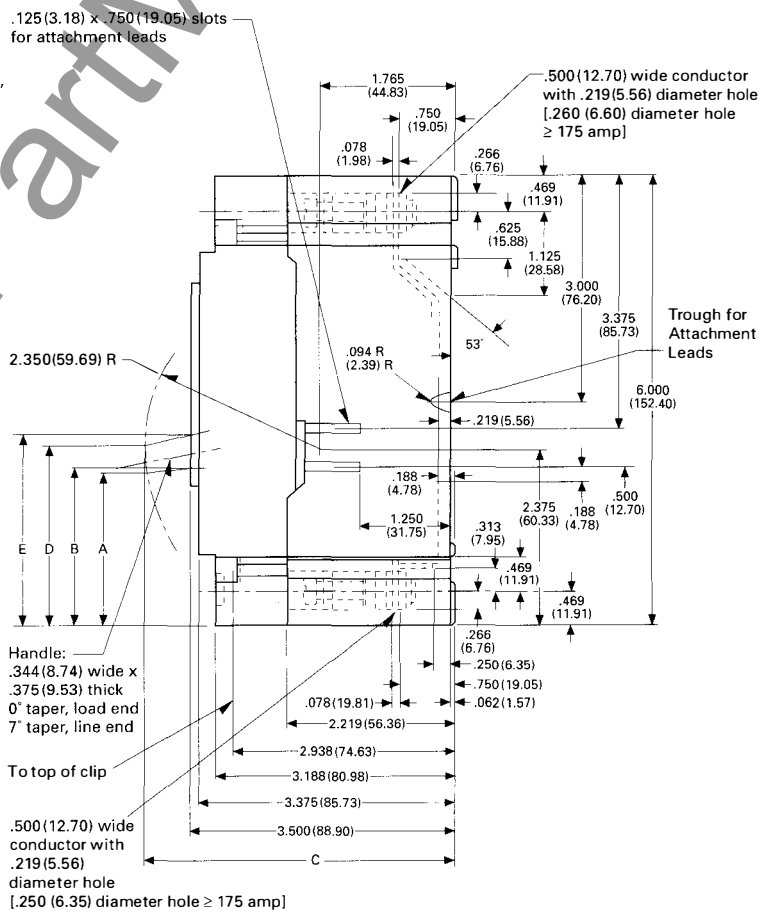

Breaker Status	Dimensions A	B	C	D	E	Handle Force, Lbs.①
On	3.07 (77.98)	2.92 (74.17)	3.96 (100.58)	3.40 (86.36)	3.33 (84.58)	14 (6.35 kgs.)
Tripped	2.65 (67.31)	2.57 (65.28)	4.06 (103.12)	2.99 (75.94)	2.98 (75.69)	4② (1.81 kgs.)
Off	2.08 (52.83)	2.14 (54.36)	4.12 (104.65)	2.42 (61.47)	2.56 (65.02)	16 (7.26 kgs.)
Reset	1.98 (50.29)	2.05 (52.07)	4.11 (104.39)	2.30 (58.42)	2.48 (63.10)	21 (9.53 kgs.)

① Measured .125 (3.175) above Escutcheon.
② Applied by breaker handle to external handle mechanism.

Reproduced from drawings 1490D63 and 1490D67

Dimensions in parentheses in millimeters

www.ElectricalPartManuals.com

Westinghouse Series C® Molded Case Circuit Breakers, F-Frame, 10-225 Amperes

Type FD Three-Pole Outline

Front Cover Cutout

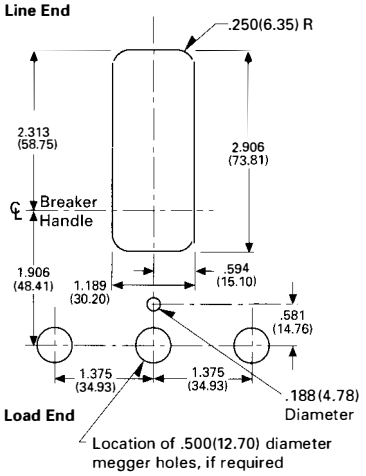

Drilling Plans

Front Connected

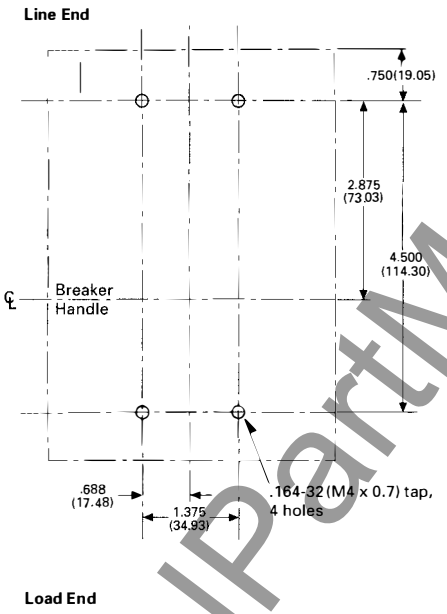

Rear Connected

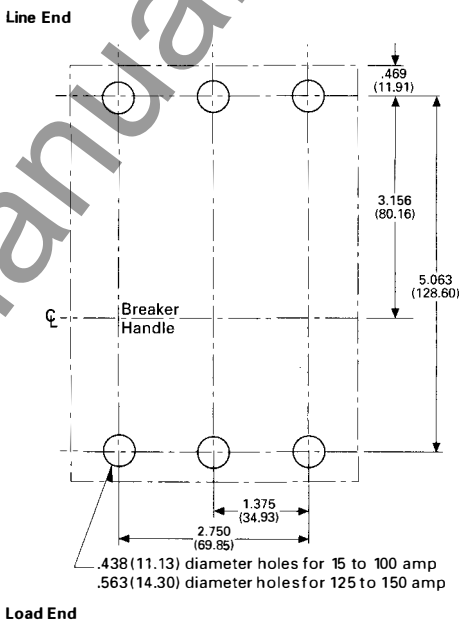

Reproduced from drawings 1490D63 and 1490D67

Dimensions in parentheses in millimeters

Cutler-Hammer
Westinghouse &
Cutler-Hammer Products
Five Parkway Center
Pittsburgh, Pennsylvania, U.S.A. 15220

Printed in U.S.A.
January 1995

www.ElectricalPartManuals.com

Cutler-Hammer
Westinghouse &
Cutler-Hammer Products
Five Parkway Center
Pittsburgh, Pennsylvania, U.S.A. 15220

Westinghouse Series C® Molded Case Circuit Breakers F-Frame 10-225 Amperes

January 1995
New Information
Mailed to: E, D, C/29-100A, 31-400A, 31-500A

Type FD Four-Pole

Type FD Four-Pole Outline

Front View

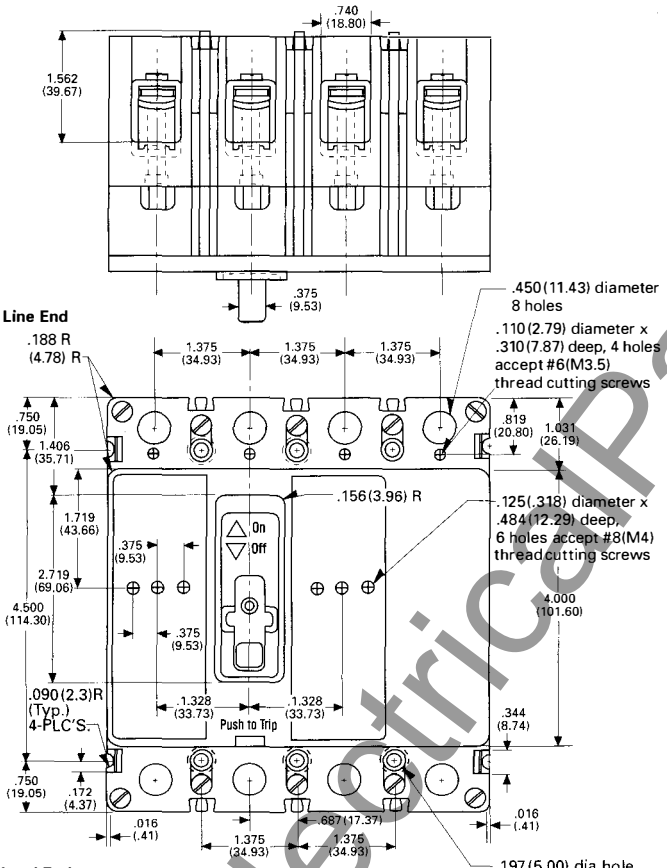

Side View

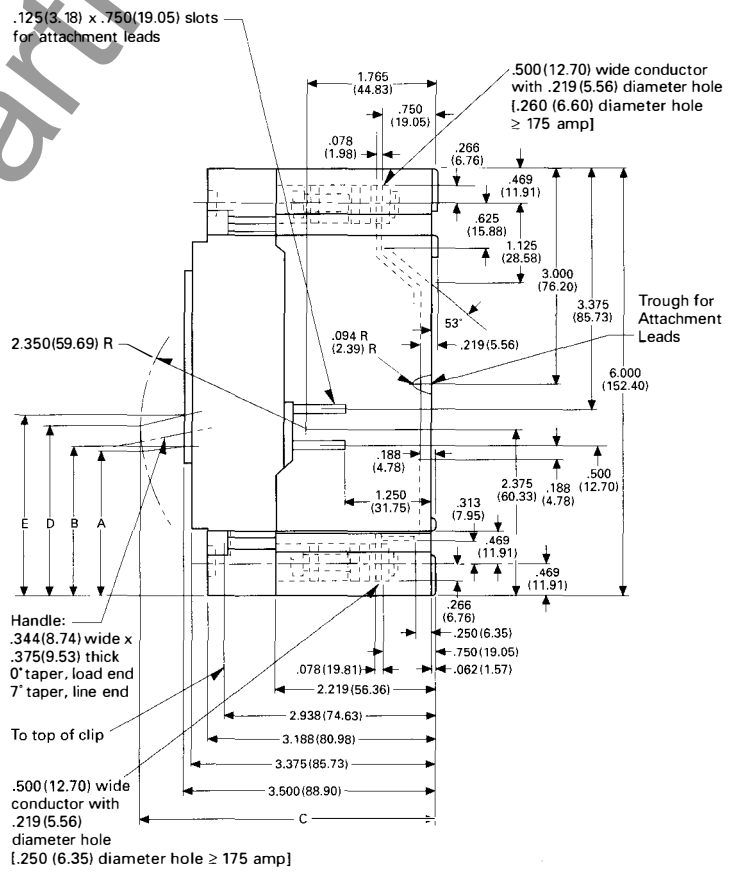

Breaker Status	Dimensions A	B	C	D	E	Handle Force, Lbs.●
On	3.07 (77.98)	2.92 (74.17)	3.96 (100.58)	3.40 (86.36)	3.33 (84.58)	14 (6.35 kgs.)
Tripped	2.65 (67.31)	2.57 (65.28)	4.06 (103.12)	2.99 (75.94)	2.98 (75.69)	4② (1.81 kgs.)
Off	2.08 (52.83)	2.14 (54.36)	4.12 (104.65)	2.42 (61.47)	2.56 (65.02)	16 (7.26 kgs.)
Reset	1.98 (50.29)	2.05 (52.07)	4.11 (104.39)	2.30 (58.42)	2.48 (63.10)	21 (9.53 kgs.)

① Measured .125 (3.175) above Escutcheon.
② Applied by breaker handle to external handle mechanism.

Reproduced from drawings 1490D64 and 1490D68

Dimensions in parentheses in millimeters

www.ElectricalPartManuals.com

Westinghouse Series C® Molded Case Circuit Breakers, F-Frame, 10-225 Amperes

Type FD Four-Pole Outline

Front Cover Cutout

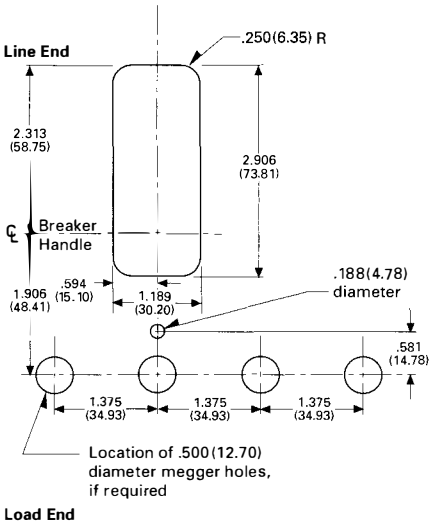

Drilling Plans

Front Connected

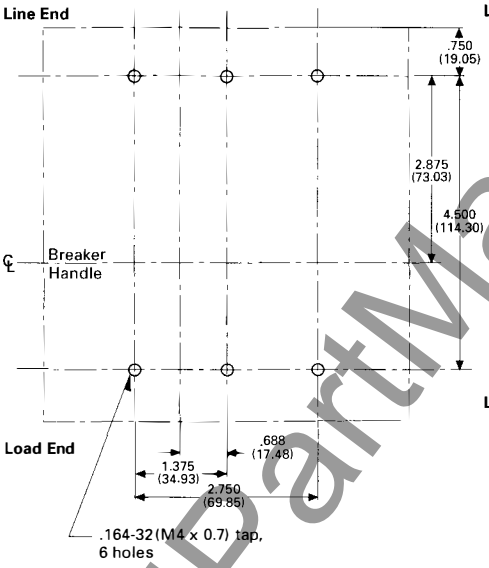

Rear Connected

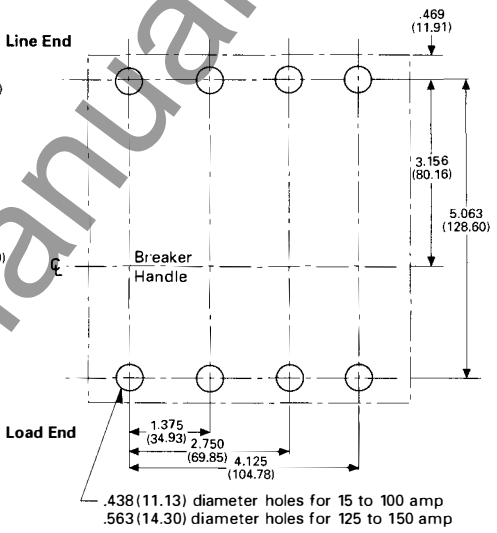

Reproduced from drawings 1490D64 and 1490D68

Dimensions in parentheses in millimeters

Cutler-Hammer
Westinghouse &
Cutler-Hammer Products
Five Parkway Center
Pittsburgh, Pennsylvania, U.S.A. 15220

Printed in U.S.A.

January 1995

www.ElectricalPartManuals.com

Cutler-Hammer
Westinghouse &
Cutler-Hammer Products
Five Parkway Center
Pittsburgh, Pennsylvania, U.S.A. 15220

January 1995
New Information
Mailed to: E, D, C/29-100A, 31-400A, 31-500A

Types JD, HJD, JDC Two- and Three-Pole

Westinghouse Series C® Molded Case Circuit Breakers J-Frame 70-250 Amperes

Types JD, HJD, JCD Two- and Three-Pole Breakers

Front View

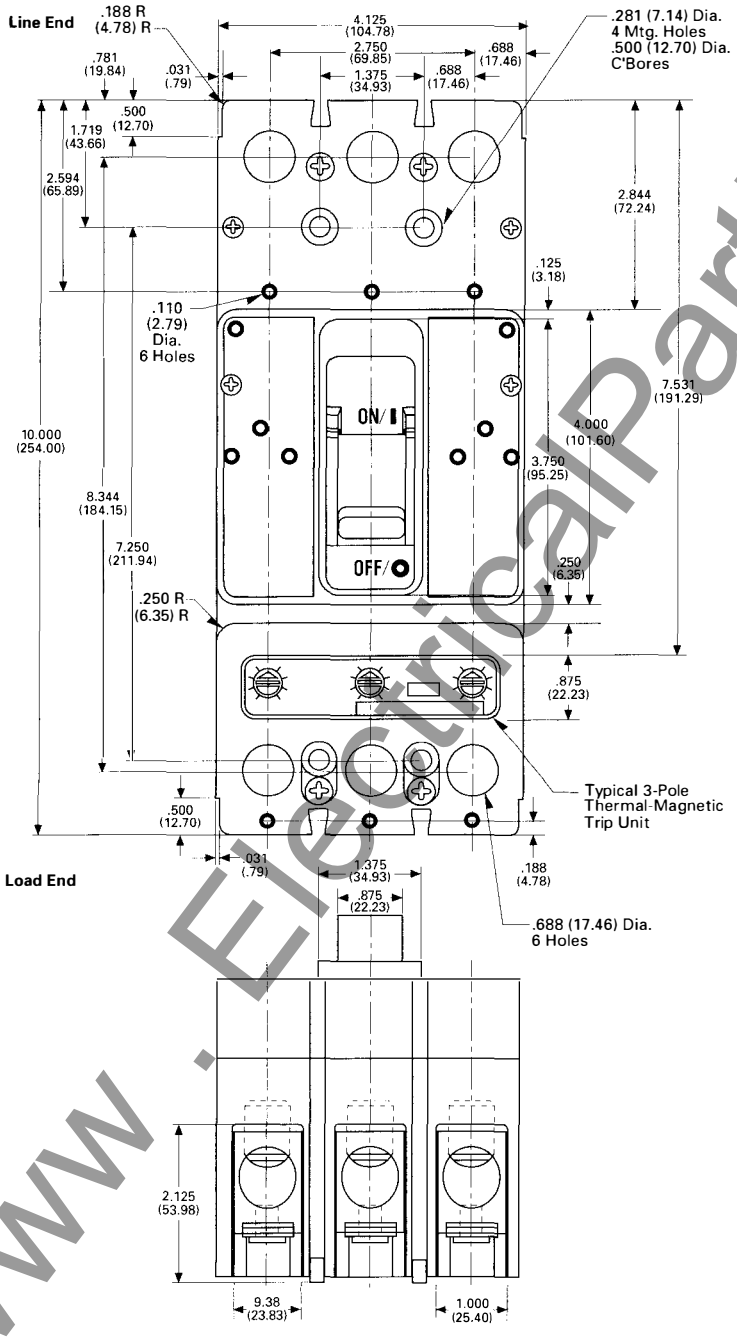

Side View

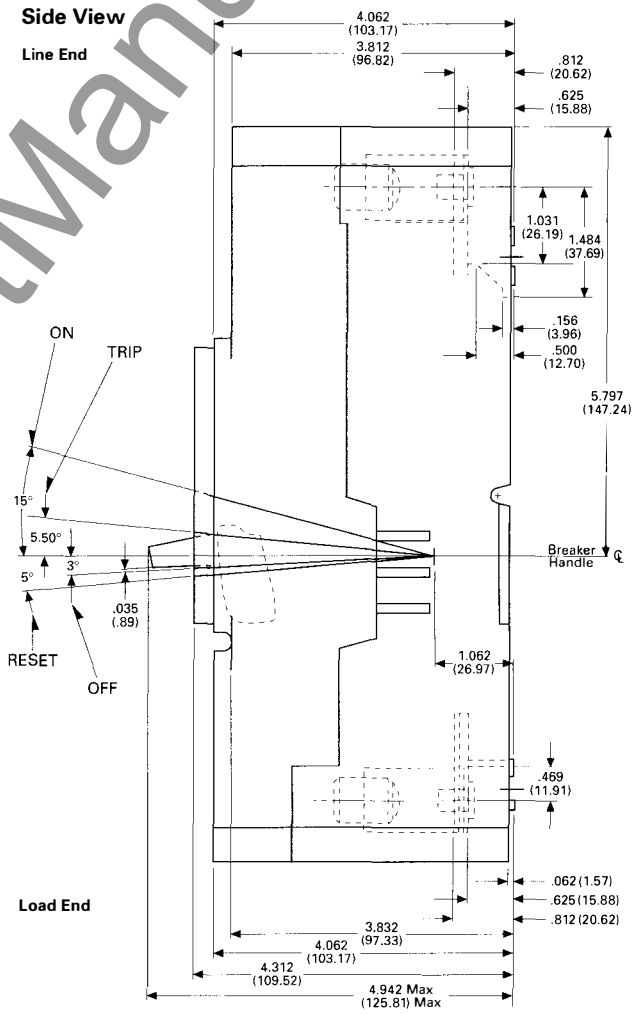

Front Connected Terminals

Catalog Number	Cable	Amp Rating	Wire Size	Torque
T250KB	Cu Single	70-250	#4 to 350 MCM	180 Lb-in (20.3 Nm)
TA250KB	Cu-Al Single	70-250	#4 to 350 MCM	275 Lb-in (31.1 Nm)

Reproduced from drawings 1491D63 and 1491D67

Dimensions in parentheses in millimeters

www.ElectricalPartManuals.com

Westinghouse Series C Molded Case Circuit Breakers, J-Frame, 70-250 Amperes

Types JD, HJD, JDC Two- and Three-Pole Breakers *Continued*

Drilling Plans

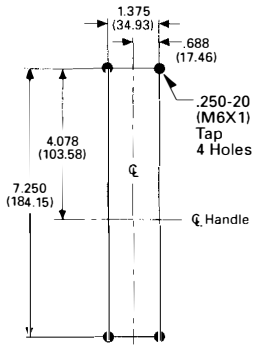

Breaker Mounting

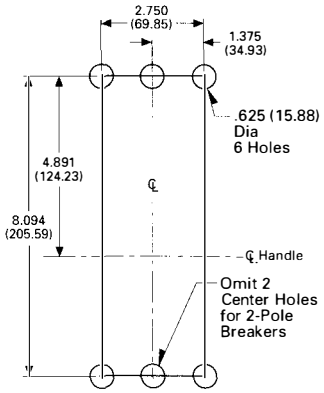

Rear Connecting Studs

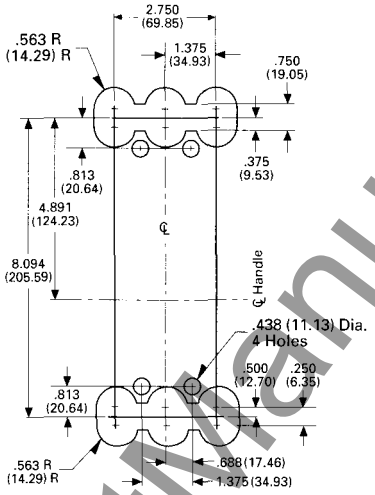

Drawout Support Blocks

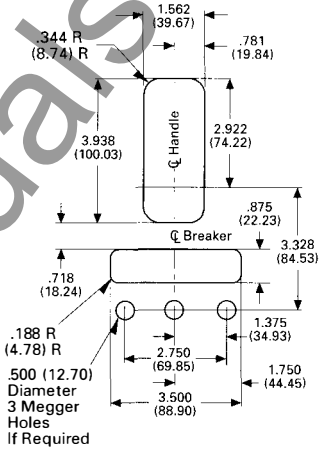

Front Cover Cutout

Breaker Shown in OFF Position

Line End

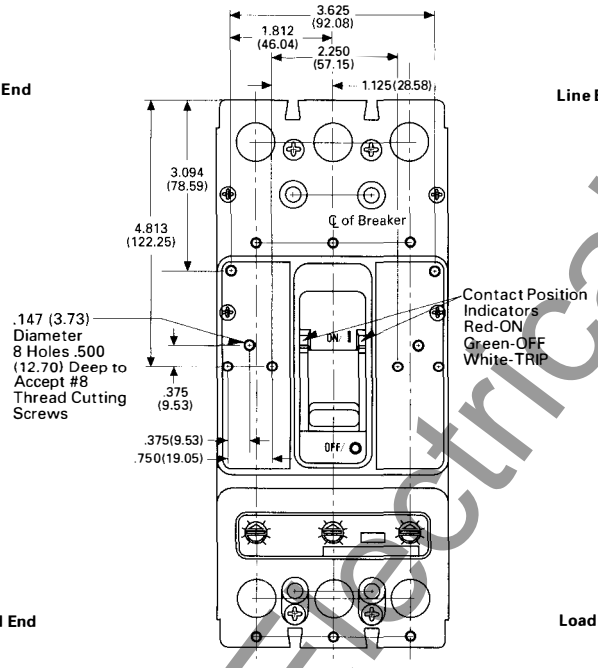

Load End

Line End

Breaker Mounting Holes
Use .250-20 (M6X1) X
2.875 (73.025) Pan Head
Screw With Sems.
Tightening Torque
65 Lb-in (7.34) Nm.

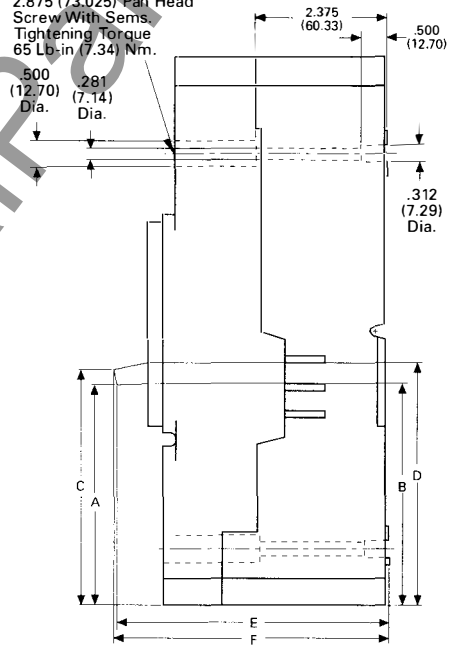

Load End

Reproduced from drawings 1491D65 and 1491D67

Breaker Status	Dimension A	B	C	D	E	F	Hdl. Oper. Force
On	5.24 (132.10)	5.12 (130.05)	5.54 (140.72)	5.49 (139.45)	4.77 (121.56)	4.72 (119.89)	32 Lb. (142.3 Nm)
Tripped	4.79 (121.67)	4.71 (119.63)	5.10 (129.54)	5.10 (129.54)	4.87 (123.70)	4.85 (123.19)	
Off	4.02 (102.11)	4.06 (103.12)	4.33 (109.82)	4.45 (113.03)	4.91 (124.71)	4.95 (125.73)	22 Lb. (97.9 Nm)
Reset	3.91 (99.31)	3.96 (100.58)	4.21 (106.93)	4.36 (110.74)	4.90 (124.46)	4.95 (125.73)	38 Lb. (169.0 Nm)

Dimensions in parentheses in millimeters

Cutler-Hammer
Westinghouse &
Cutler-Hammer Products
Five Parkway Center
Pittsburgh, Pennsylvania, U.S.A. 15220

www.ElectricalPartManuals.com

Cutler-Hammer
Westinghouse &
Cutler-Hammer Products
Five Parkway Center
Pittsburgh, Pennsylvania, U.S.A. 15220

Westinghouse Series C® Molded Case Circuit Breakers J-Frame 70-250 Amperes

January 1995
New Information
Mailed to: E, D, C/29-100A, 31-400A, 31-500A

Types JD, HJD, JDC Four-Pole

Types JD, HJD, JDC Four-Pole Breakers

Front View

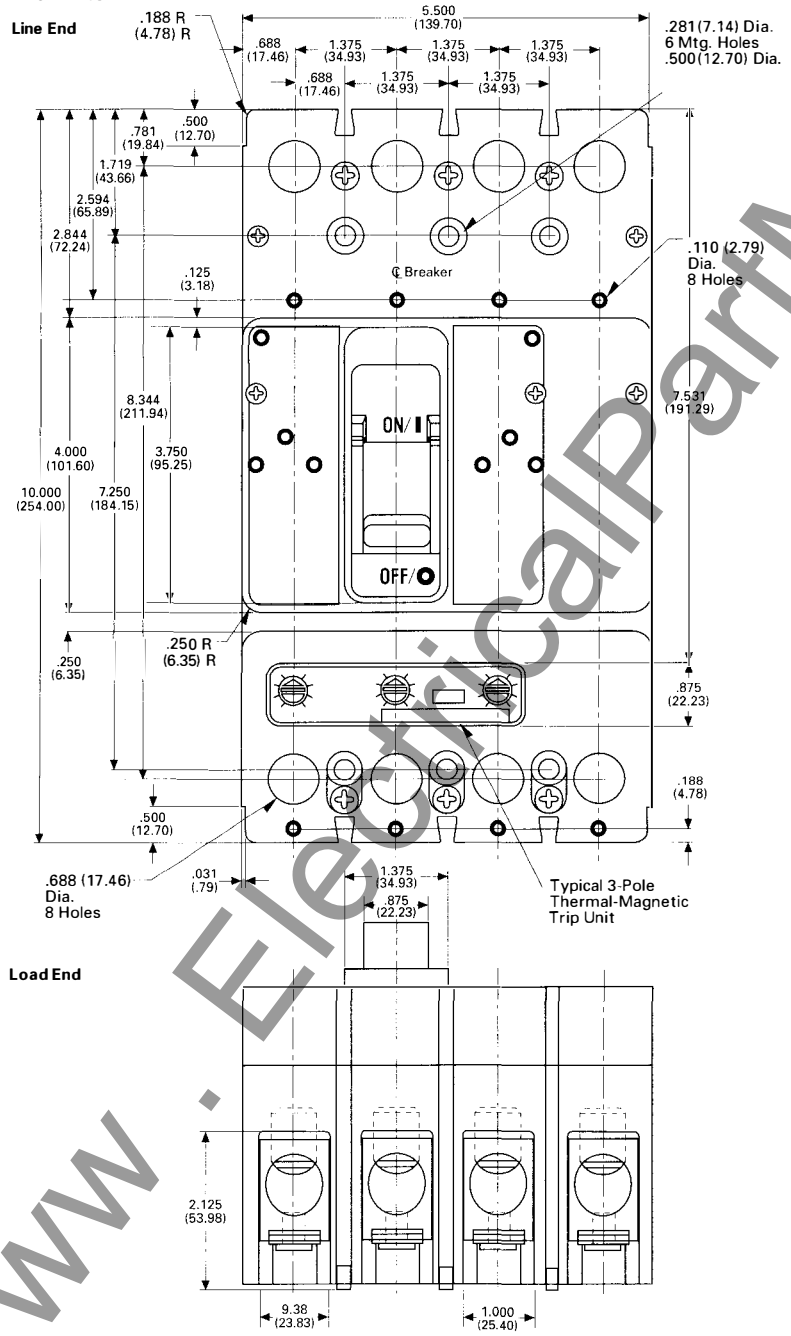

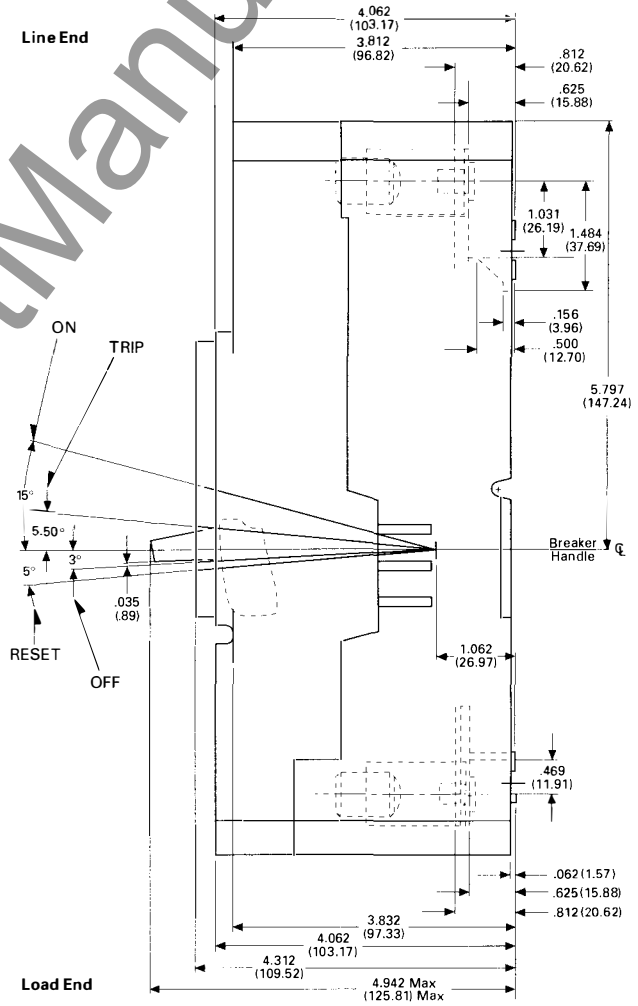

Front Connected Terminals

Catalog Number	Cable	Amp Rating	Wire Size	Torque
T250KB	Cu Single	70-250	#4 to 350 MCM	180 Lb-in (20.3 Nm)
TA250KB	Cu-Al Single	70-250	#4 to 350 MCM	275 Lb-in (31.1 Nm)

Reproduced from drawings 1491D64 and 1491D68

Dimensions in parentheses in millimeters

www.ElectricalPartManuals.com

Westinghouse Series C Molded Case Circuit Breakers, J-Frame, 70-250 Amperes

Types JD, HJD, JDC Four-Pole Breakers *Continued*

Drilling Plans

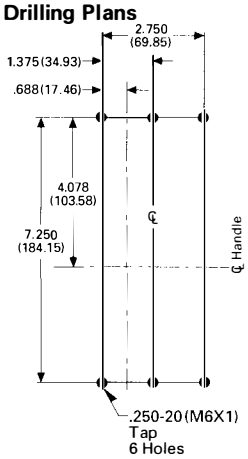

Breaker Mounting

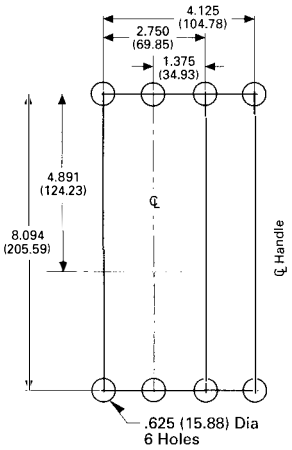

Rear Connecting Studs

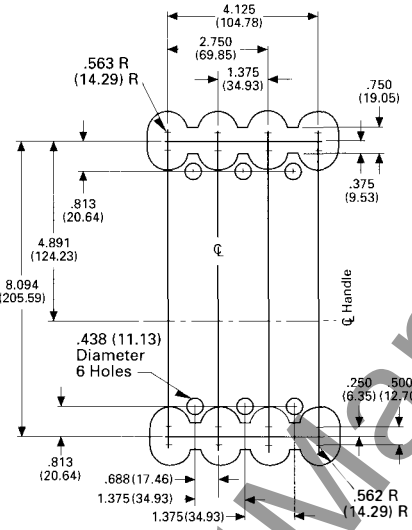

Drawout Support Blocks

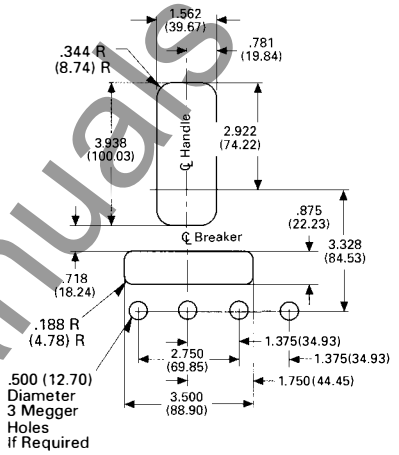

Front Cover Cutout

Breaker Shown in OFF Position

Line End

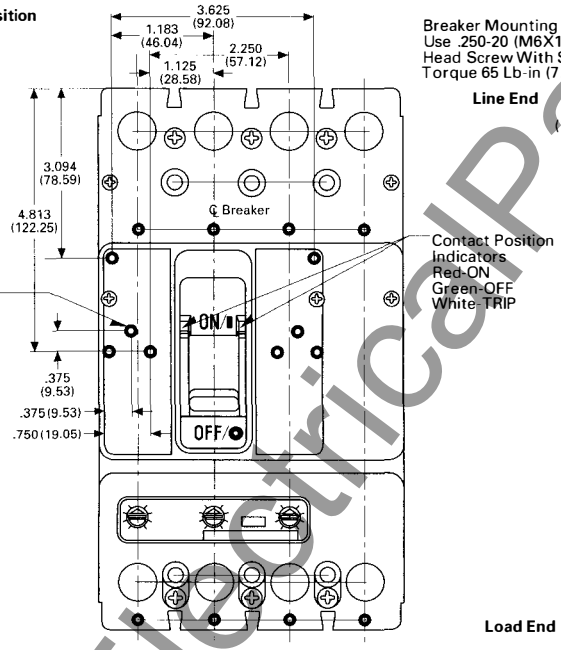

Load End

Breaker Mounting Holes Use .250-20 (M6X1) X 2.875 (73.025) Pan Head Screw With Sems. Tightening Torque 65 Lb-in (7.34) Nm.

Line End

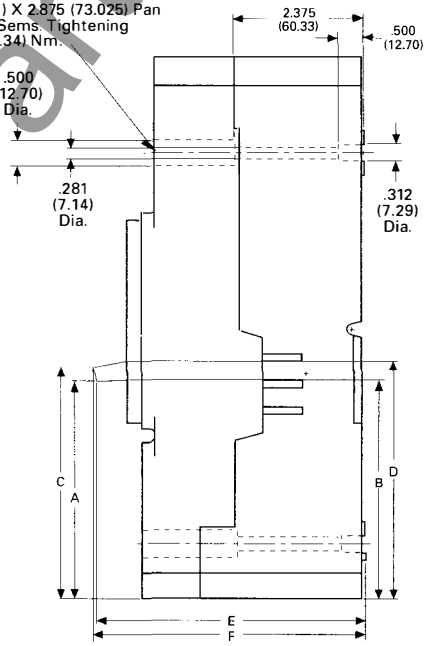

Load End

Reproduced from drawings 1491D64 and 1491D68

Breaker Status	Dimension A	B	C	D	E	F	Hdl. Oper. Force
On	5.24 (132.10)	5.12 (130.05)	5.54 (140.72)	5.49 (139.45)	5.47 (124.71)	4.72 (119.89)	32 Lb. (142.3 Nm)
Tripped	4.79 (121.67)	4.71 (119.63)	5.10 (129.54)	5.10 (129.54)	4.87 (123.70)	4.85 (123.19)	
Off	4.02 (102.11)	4.06 (103.12)	4.33 (109.82)	4.45 (113.03)	4.91 (124.71)	4.95 (125.73)	22 Lb. (97.9 Nm)
Reset	3.91 (99.31)	3.96 (100.58)	4.21 (106.93)	4.36 (110.74)	4.90 (124.46)	4.95 (125.73)	38 Lb. (169.0 Nm)

Dimensions in parentheses in millimeters

Cutler-Hammer
Westinghouse &
Cutler-Hammer Products
Five Parkway Center
Pittsburgh, Pennsylvania, U.S.A. 15220

www.ElectricalPartManuals.com

Cutler-Hammer
Westinghouse &
Cutler-Hammer Products
Five Parkway Center
Pittsburgh, Pennsylvania, U.S.A. 15220

January 1995
New Information
Mailed to: E, D, C/29-100A, 31-400A, 31-500A

Type KD Two- and Three-Pole

Westinghouse Series C® Molded Case Circuit Breakers K-Frame

Electronic – 70-400 Amperes
Thermal-Magnetic – 100-400 Amperes

Type KD Two- and Three-Pole Breakers

Front View

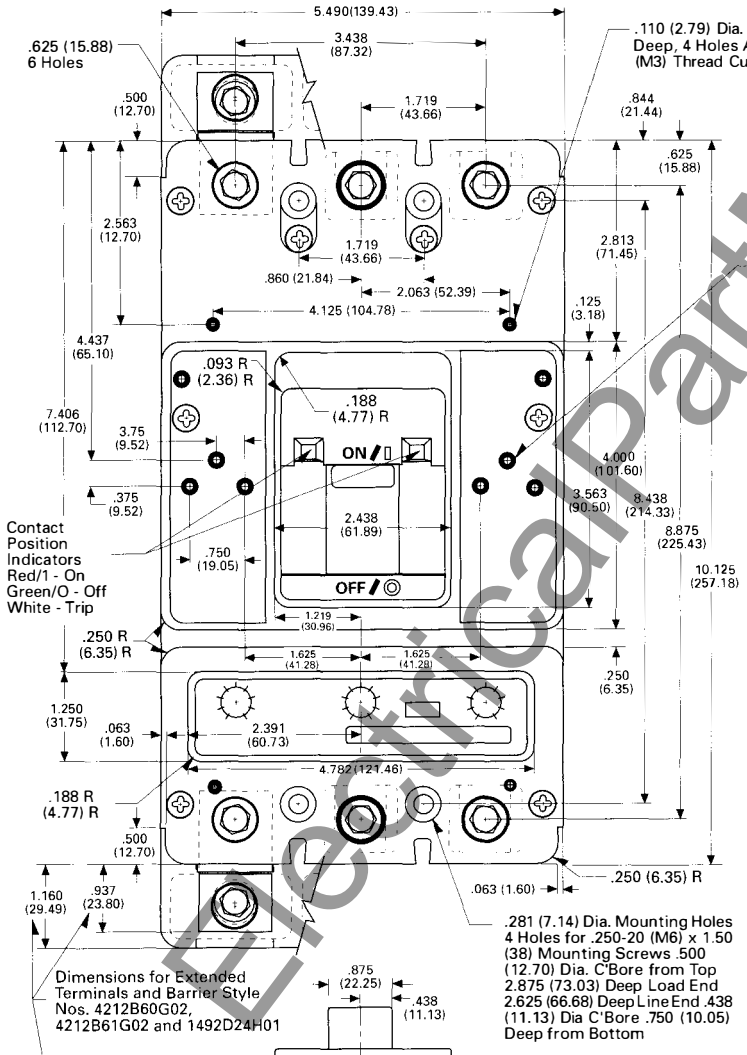

Side View

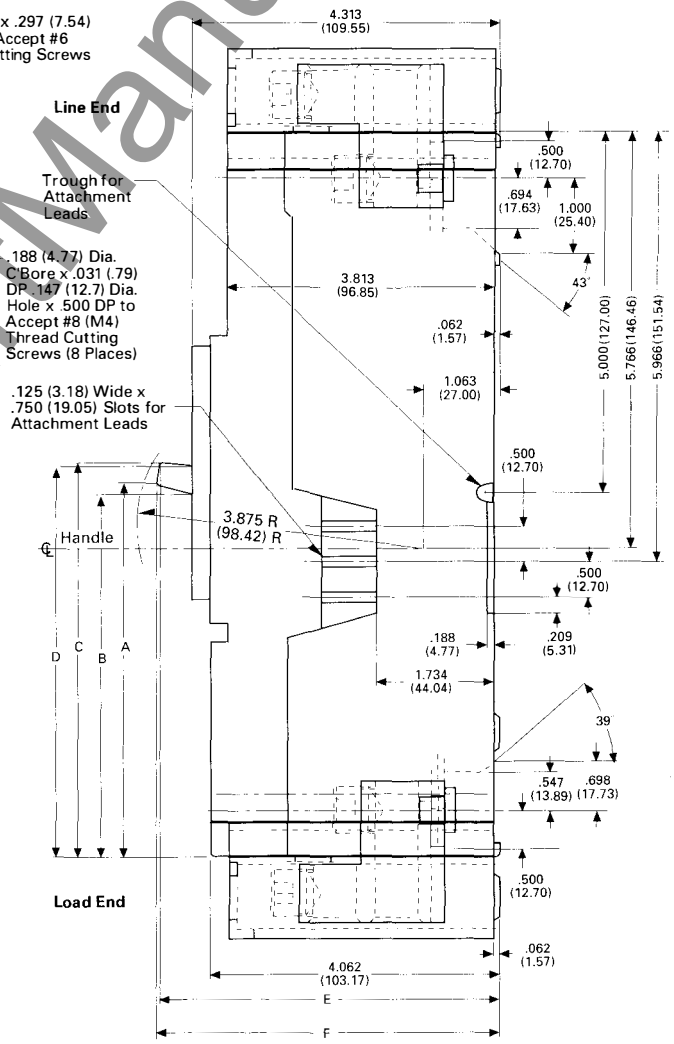

Breaker Status	Dimensions A	B	C	D	E	F	Handle Force①
On	5.39 (136.9)	5.20 (132.1)	5.69 (144.5)	5.61 (142.5)	4.72 (119.9)	4.77 (121.2)	30 lbs. (13.61 kgs.)
Tripped	4.77 (121.2)	4.69 (119.1)	5.08 (129.0)	5.11 (129.8)	4.89 (124.2)	4.89 (124.2)	—
Off	4.16 (105.7)	4.21 (106.9)	4.46 (113.3)	4.64 (117.9)	4.95 (125.7)	4.91 (124.7)	25 lbs. (11.34 kgs.)
Reset	4.07 (103.4)	4.14 (105.2)	4.57 (116.1)	4.56 (115.8)	4.95 (125.7)	4.90 (124.5)	35 lbs. (15.87 kgs.)

① All handle forces measured approximately 0.125 (3.17) from top of handle.

Reproduced from drawings 1492D63 and 1492D67
Dimensions in parentheses in millimeters

www.ElectricalPartManuals.com

Westinghouse Series C® Molded Case Circuit Breakers, K-Frame

Electronic – 70-400 Amperes; Thermal-Magnetic – 100-400 Amperes

Type KD Two- and Three-Pole Breakers, Drilling Plans

Rear Connected Studs

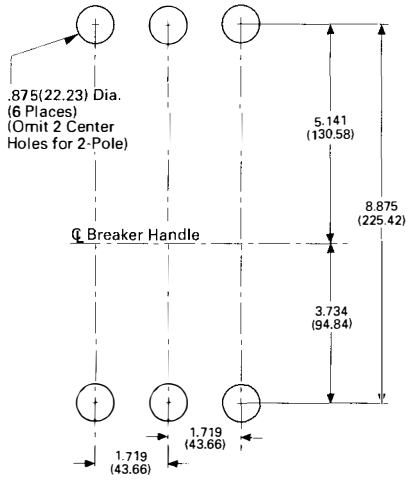

Front Connected Terminals

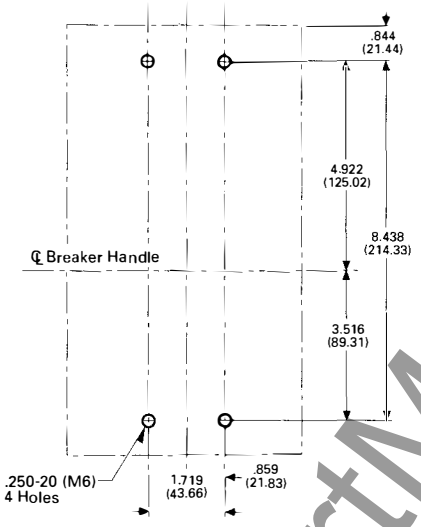

Front Cover Cutout

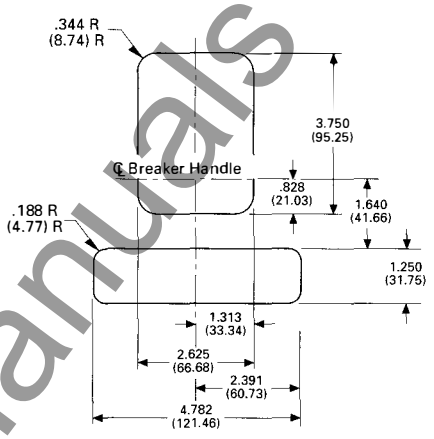

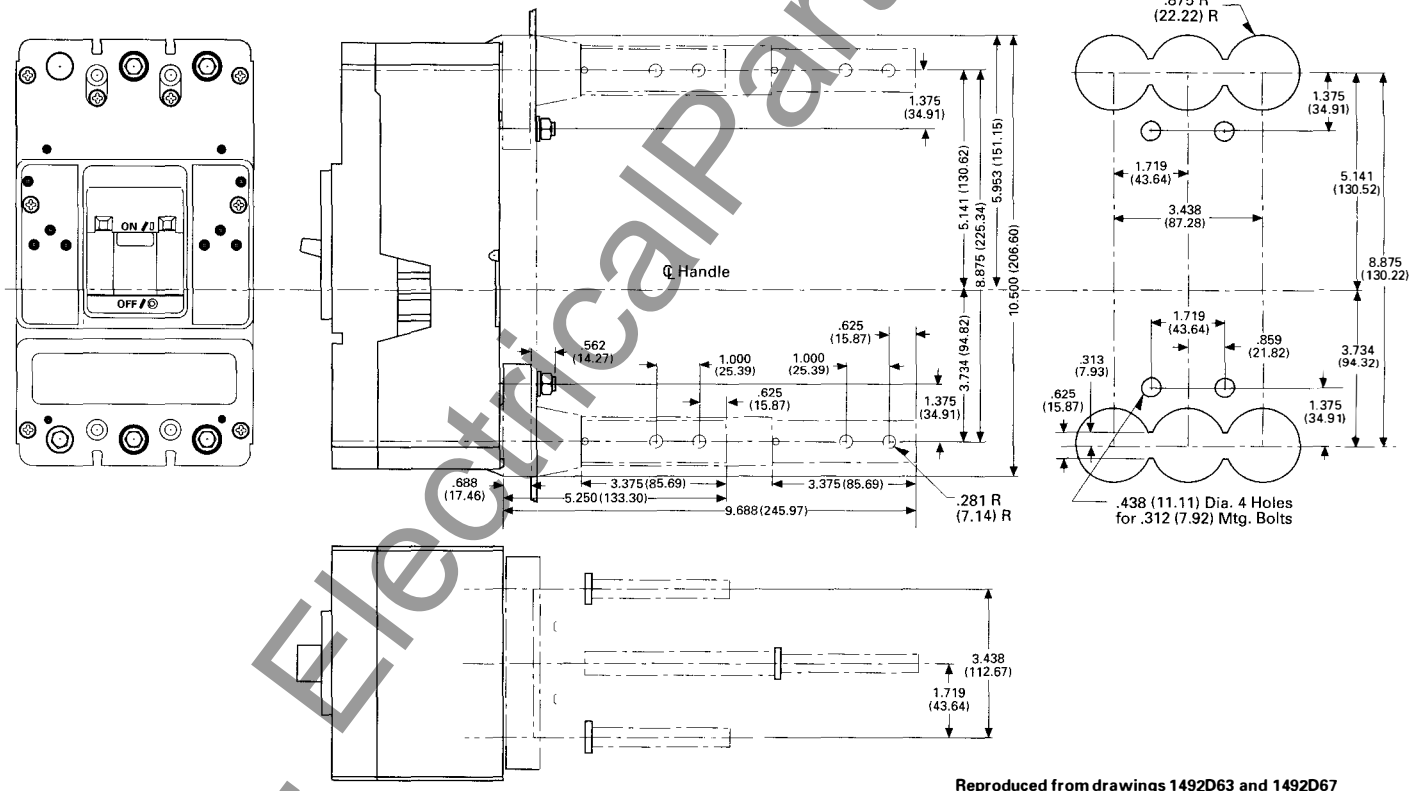

Reproduced from drawings 1492D63 and 1492D67
Dimensions in parentheses in millimeters

Cutler-Hammer
Westinghouse &
Cutler-Hammer Products
Five Parkway Center
Pittsburgh, Pennsylvania, U.S.A. 15220

Printed in U.S.A.
January 1995

www . ElectricalPartManuals . com

Cutler-Hammer
Westinghouse &
Cutler-Hammer Products
Five Parkway Center
Pittsburgh, Pennsylvania, U.S.A. 15220

January 1995
New Information
Mailed to: E, D, C/29-100A, 31-400A, 31-500A

Type KD Four-Pole

Westinghouse Series C® Molded Case Circuit Breakers K-Frame

Electronic – 70-400 Amperes
Thermal-Magnetic – 100-400 Amperes

Type KD Four-Pole Breakers

Front View

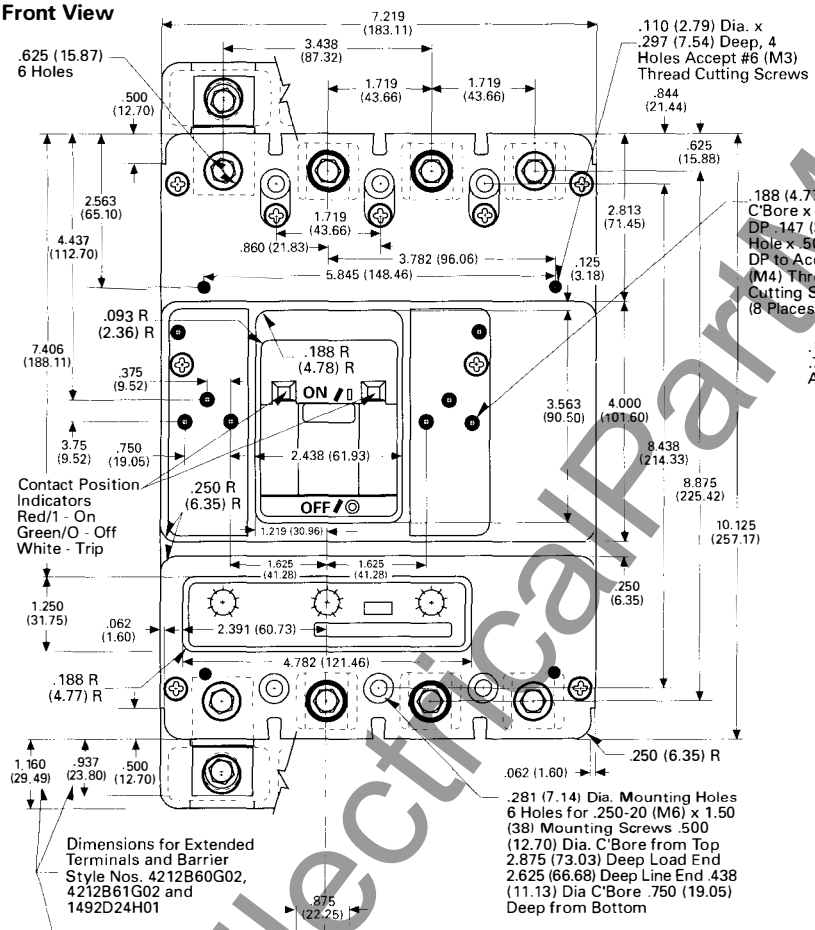

Side View

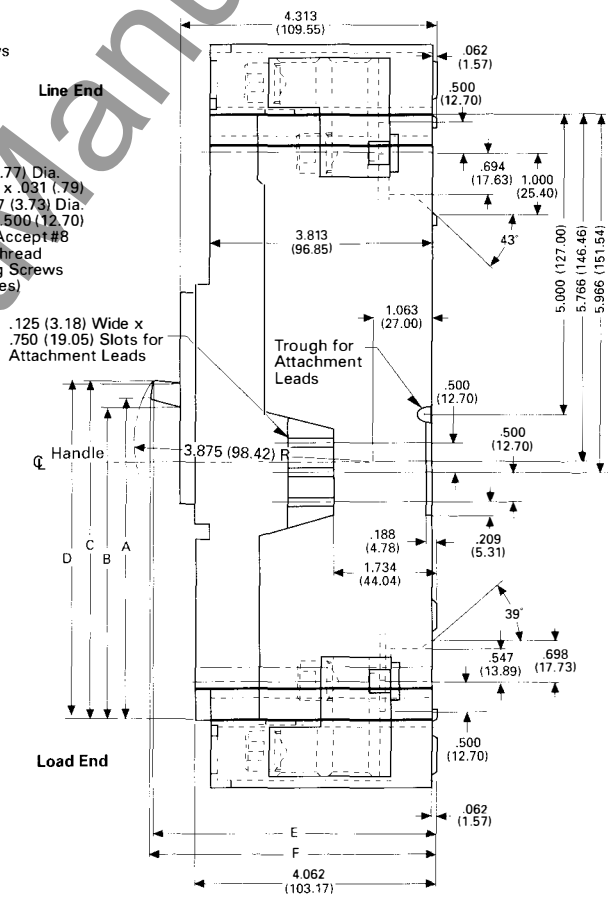

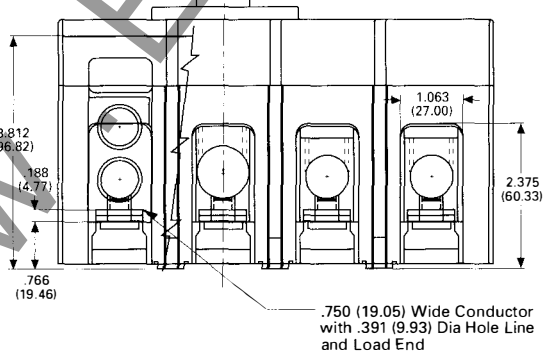

Breaker Status	Dimensions A	B	C	D	E	F	Handle Force[1]
On	5.39 (136.9)	5.20 (132.1)	5.69 (144.5)	5.61 (142.5)	4.72 (119.9)	4.77 (121.2)	30 lbs. (13.61 kgs.)
Tripped	4.77 (121.2)	4.69 (119.1)	5.08 (129.0)	5.11 (129.8)	4.89 (124.2)	4.89 (124.2)	—
Off	4.16 (105.7)	4.21 (106.9)	4.46 (113.3)	4.64 (117.9)	4.95 (125.7)	4.91 (124.7)	25 lbs. (11.34 kgs.)
Reset	4.07 (103.4)	4.14 (105.2)	4.57 (116.1)	4.56 (115.8)	4.95 (125.7)	4.90 (124.5)	35 lbs. (15.87 kgs.)

[1] All handle forces measured approximately 0.125 (3.17) from top of handle.

Reproduced from drawings 1492D64 and 1492D68
Dimensions in parentheses in millimeters

www.ElectricalPartManuals.com

Westinghouse Series C® Molded Case Circuit Breakers, K-Frame

Electronic – 70-400 Amperes; Thermal-Magnetic – 100-400 Amperes

Drilling Plans

Rear Connected Studs

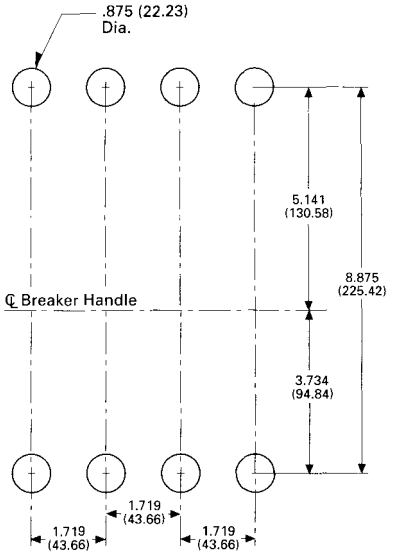

Front Connected Terminals

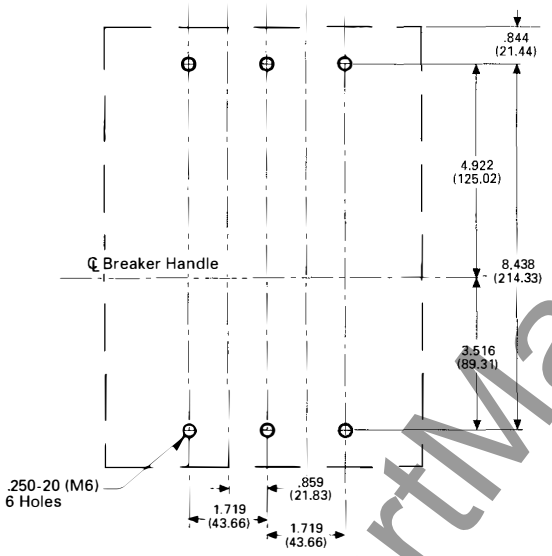

Front Cover Cutout

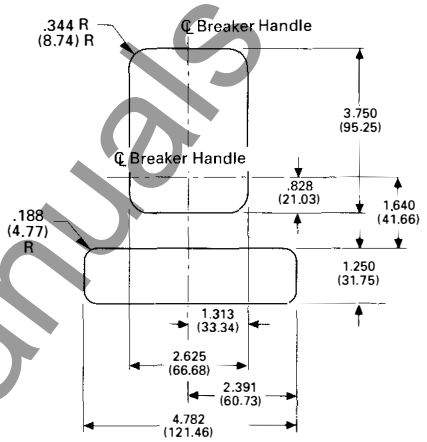

Reproduced from drawings 1492D64 and 1492D68 **Dimensions in parentheses in millimeters**

Cutler-Hammer
Westinghouse &
Cutler-Hammer Products
Five Parkway Center
Pittsburgh, Pennsylvania, U.S.A. 15220

Printed in U.S.A.

January 1995

www.ElectricalPartManuals.com

Cutler-Hammer
Westinghouse &
Cutler-Hammer Products
Five Parkway Center
Pittsburgh, Pennsylvania, U.S.A. 15220

Westinghouse Series C® Molded Case Circuit Breakers L-Frame 300-600 Amperes

January 1995
New Information
Mailed to: E, D, C/29-100A,
31-400A,
31-500A

Types LD, HLD, LDC Two- and Three-Pole

Types LD, HLD, LDC Two- and Three-Pole Breakers

Front View

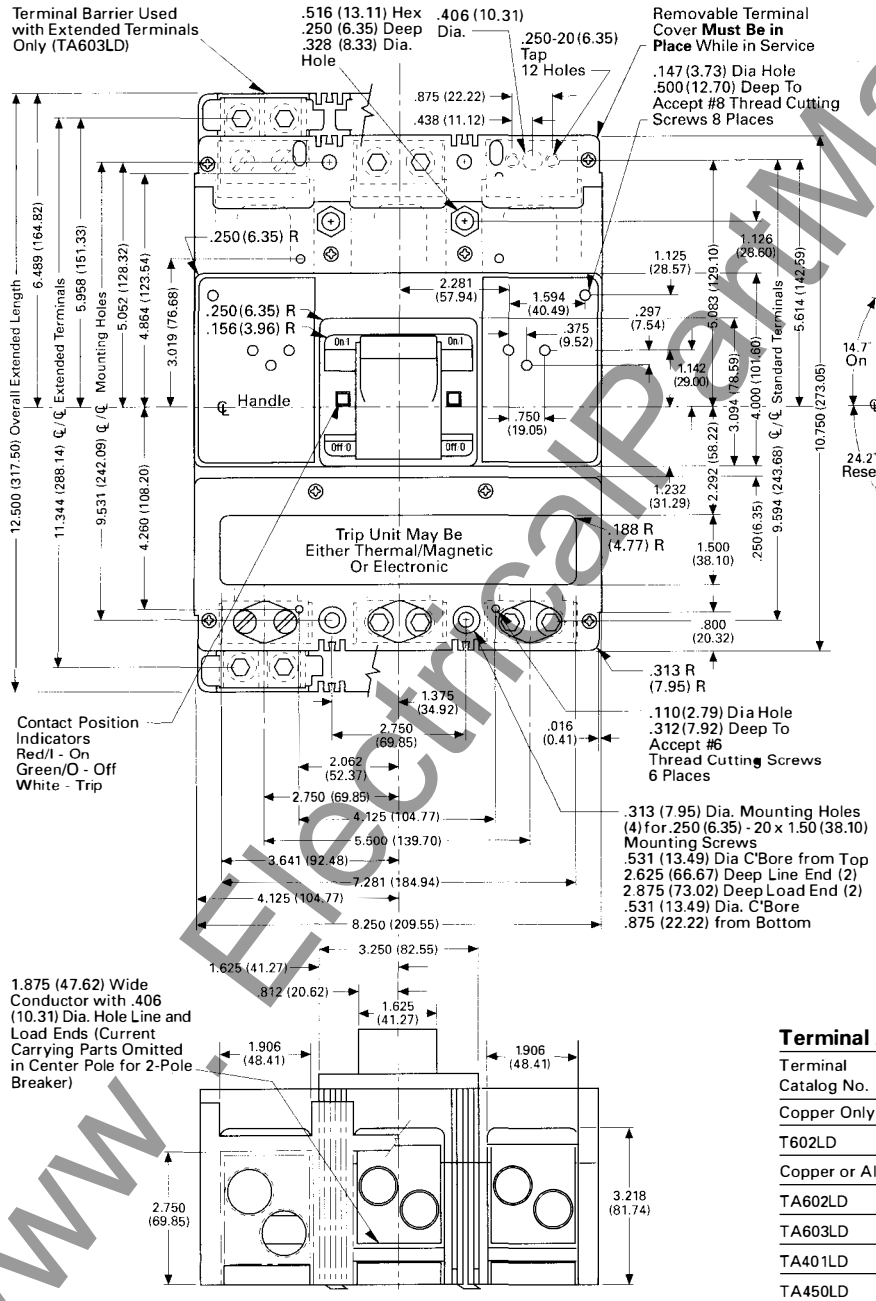

Side View

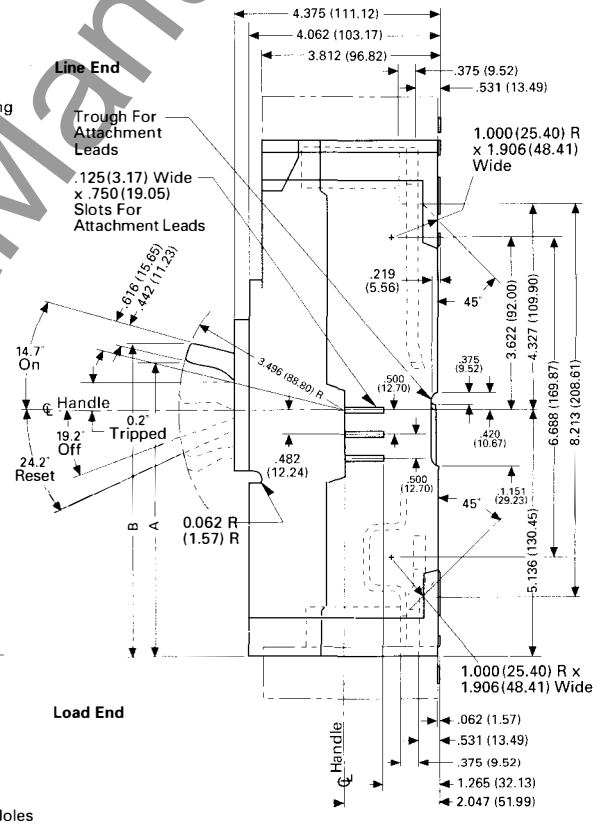

Handle Forces (From End of Handle)①

On	45 lbs.
Off	50 lbs.
Reset	60 lbs.

① Measurements taken approximately 3/16 in. from end of handle.

Terminal Arrangements

Terminal Catalog No.	Wire Range (MCM)	Number of Cables	Torque
Copper Only Cable (Supplied in Kit Form)			
T602LD	250-350	2	275 Lb-in. (31.1 Nm)
Copper or Aluminum Cable (Supplied in Kit Form)			
TA602LD	250-350	2	275 Lb-in. (31.1 Nm)
TA603LD	400-500	2	275 Lb-in. (31.1 Nm)
TA401LD	4/0-600	1	400 Lb-in. (45.2 Nm)
TA450LD	4-4/0	2	275 Lb-in. (31.1 Nm)

Reproduced from drawings 1493D63 and 1493D67

Dimensions in parentheses in millimeters

www.ElectricalPartManuals.com

Westinghouse Series C® Molded Case Circuit Breakers, L-Frame, 300-600 Amperes

Types LD, HLD, LDC Two- and Three-Pole Breakers, *Continued*

Drilling Plans

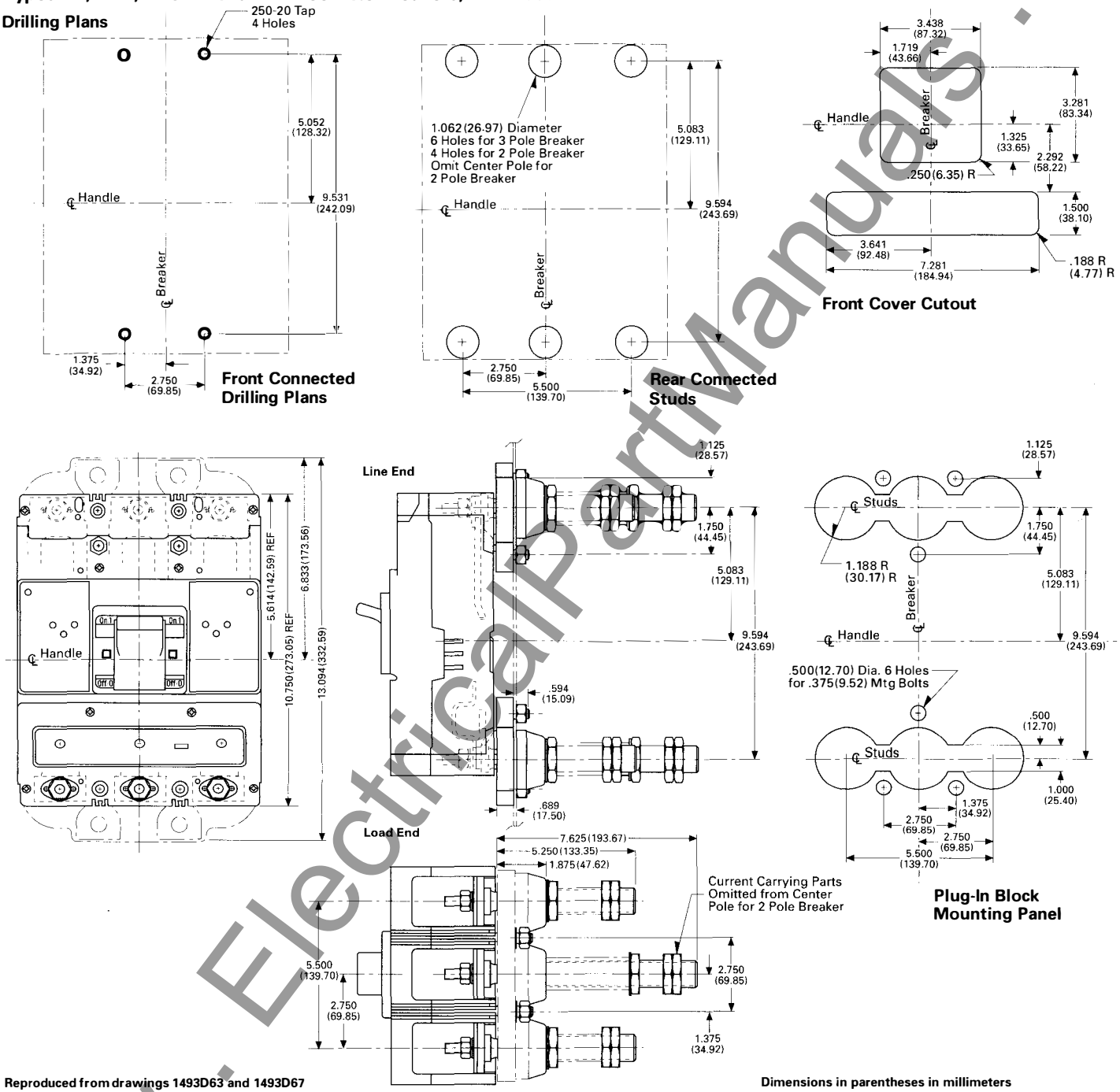

Reproduced from drawings 1493D63 and 1493D67

Dimensions in parentheses in millimeters

Cutler-Hammer
Westinghouse &
Cutler-Hammer Products
Five Parkway Center
Pittsburgh, Pennsylvania, U.S.A. 15220

www.ElectricalPartManuals.com

Cutler-Hammer
Westinghouse &
Cutler-Hammer Products
Five Parkway Center
Pittsburgh, Pennsylvania, U.S.A. 15220

Westinghouse Series C® Molded Case Circuit Breakers L-Frame 300-600 Amperes

January 1995
New Information
Mailed to: E, D, C/29-100A, 31-400A, 31-500A

Types LD, HLD, LDC Four-Pole

Types LD, HLD, LDC Four-Pole Breakers

Front View

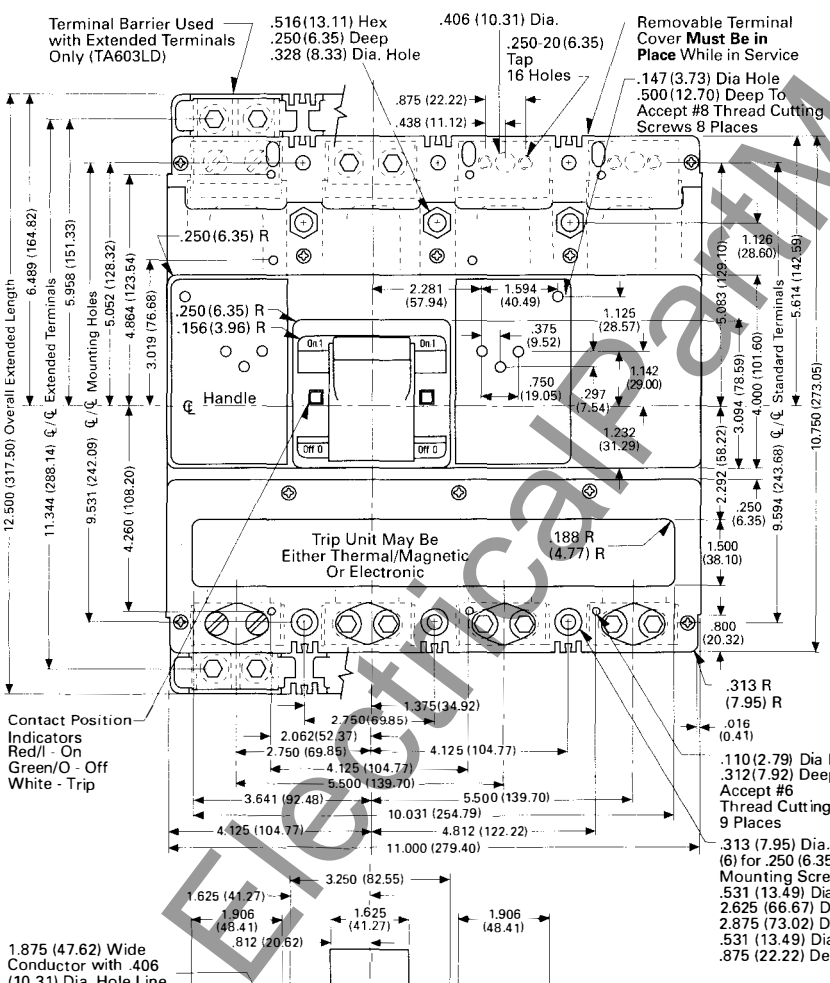

Side View

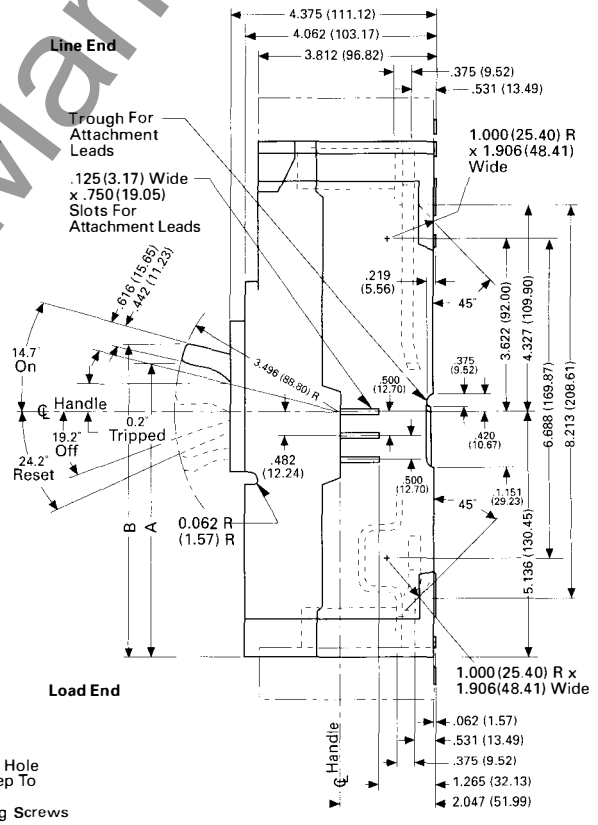

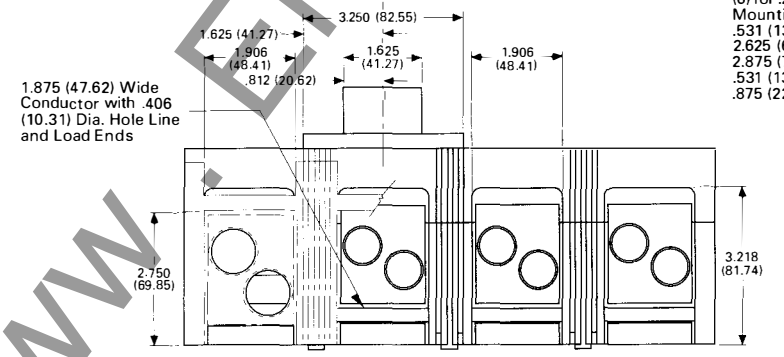

Handle Forces (From End of Handle)①

On	45 lbs.
Off	50 lbs.
Reset	60 lbs.

① Measurements taken approximately 3/16 in. from end of handle.

Terminal Arrangements

Terminal Catalog No.	Wire Range (MCM)	Number of Cables	Torque
Copper Only Cable (Supplied in Kit Form)			
T602LD	250-350	2	275 Lb-in. (31.1 Nm)
Copper or Aluminum Cable (Supplied in Kit Form)			
TA602LD	250-350	2	275 Lb-in. (31.1 Nm)
TA603LD	400-500	2	275 Lb-in. (31.1 Nm)
TA401LD	4/0-600	1	400 Lb-in. (45.2 Nm)
TA450LD	4-4/0	2	275 Lb-in. (31.1 Nm)

Reproduced from drawings 1493D64 and 1493D68

Dimensions in parentheses in millimeters

www.ElectricalPartManuals.com

Westinghouse Series C® Molded Case Circuit Breakers, L-Frame, 300-600 Amperes

Types LD, HLD, LDC Four-Pole Breakers, *Continued*

Drilling Plans

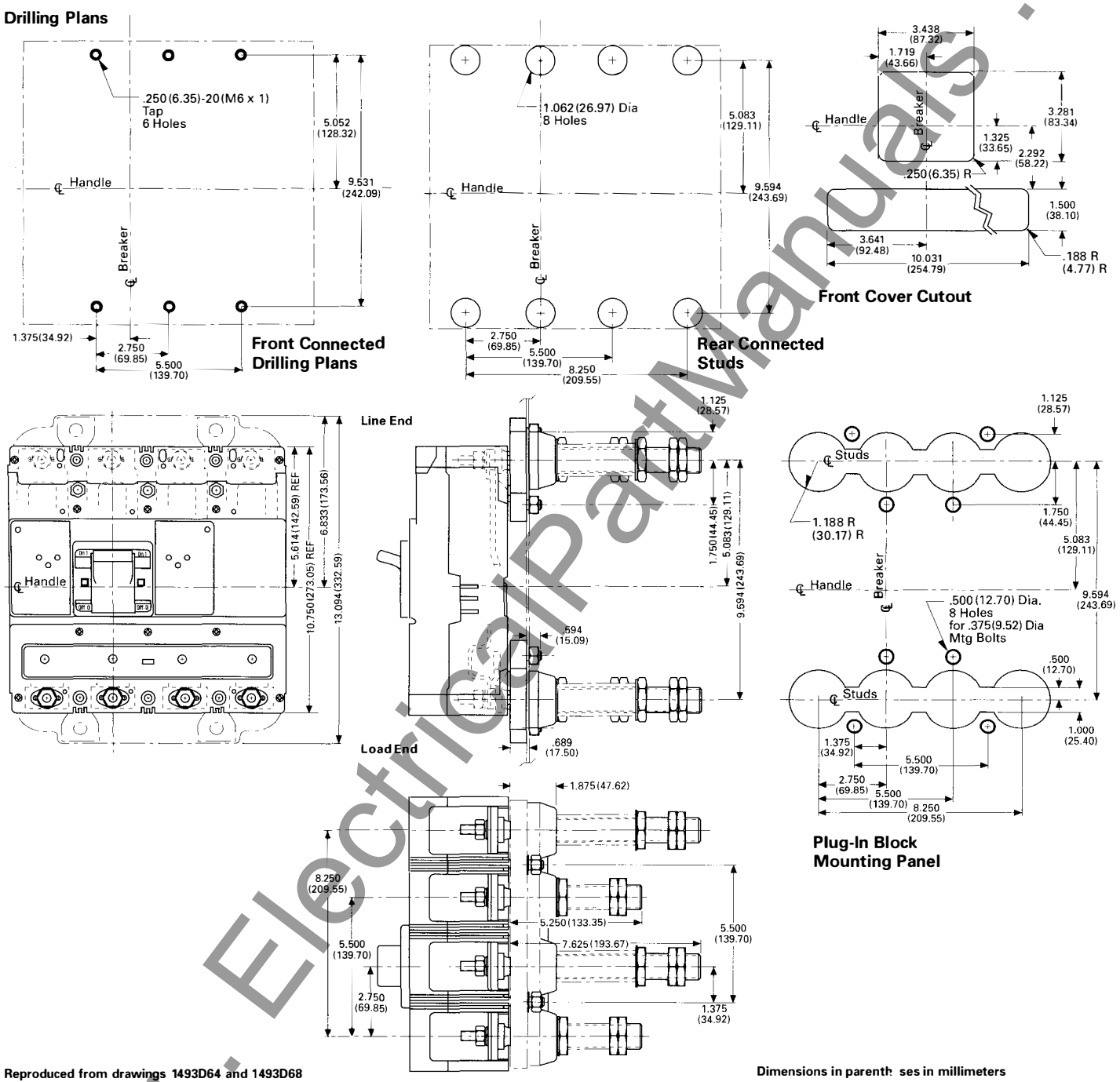

Reproduced from drawings 1493D64 and 1493D68

Dimensions in parenth ses in millimeters

Cutler-Hammer
Westinghouse &
Cutler-Hammer Products
Five Parkway Center
Pittsburgh, Pennsylvania, U.S.A. 15220

www.ElectricalPartManuals.com

Westinghouse Series C® Molded Case Circuit Breakers, M-Frame, 400-800 Amperes

Type MD Two- and Three-Pole Breakers, Drilling Plans

For Plug-In Block

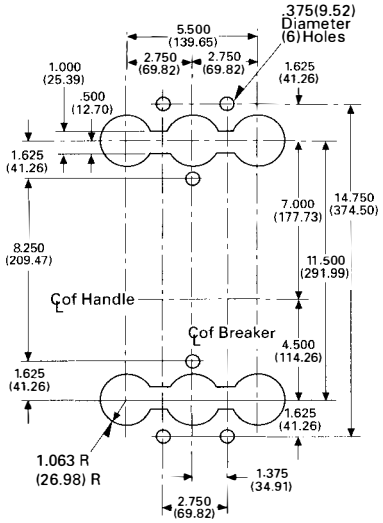

For Rear Connected Studs

(For Non-Conductive Panels)

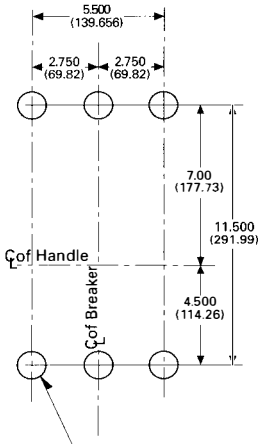

For Mounting Bolts

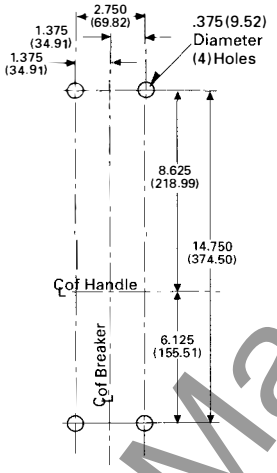

Front Cover Cutout

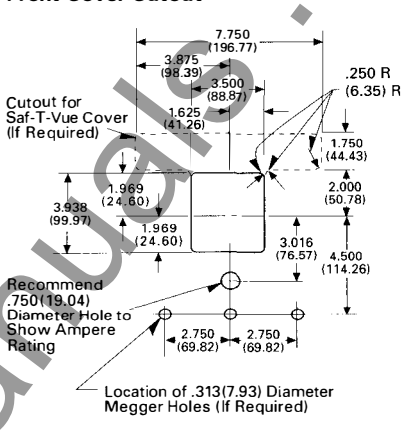

.563(14.28) Diameter Hole for 125 to 225 Amps	1.188 (30.15) Diameter Hole for 700 to 800 Amps
.813 (20.63) Diameter Hole for 250 to 400 Amps	6 Holes for 3 Pole Breaker 4 Holes for 2 Pole Breaker
1.063(26.98) Diameter Hole for 450 to 600 Amps	Omit 2 Center Holes for 2 Pole Breaker

Terminal Arrangements

Cable	Catalog Number	Ampere Rating	Wire Size
For use With Copper Cable Only			
Single	T350MA	125-350	#1-600 MCM
Double	T600MA1	400-600	2/0-500 MCM
Triple	T800MA1	700-800	3/0-300 MCM
For Use With Al/Cu Cable			
Double	TA700MA1	125-600	#1-500 MCM
Triple	TA800MA2	700-800	3/0-400 MCM

Rear Connected Studs

Stud Ampere Rating	Stud Style Number	Thread Size	Dimension A
125-225	314C960G01	$^1/_2$-13	$3^{21}/_{32}$
250-400	314C960G04	$^3/_4$-16	$5^{29}/_{32}$
250-400	314C960G05	$^3/_4$-16	$8^{13}/_{32}$
250-400	314C960G06	$^3/_4$-16	$10^{29}/_{32}$
450-600	314C960G07	1-12	$5^{29}/_{32}$
450-600	314C960G08	1-12	$8^{13}/_{32}$
450-600	314C960G09	1-12	$10^{29}/_{32}$
700-800	314C960G10	$1^1/_8$-12	$5^{29}/_{32}$
700-800	314C960G11	$1^1/_8$-12	$8^{13}/_{32}$
700-800	314C960G12	$1^1/_8$-12	$10^{29}/_{32}$

Plug-In Adapter Kit

Poles	Ampere Rating	Kit Style Number	Thread Size	Fig.
2	125-600	313C644G27	$1^1/_8$-12	1
3	125-600	313C644G28	$1^1/_8$-12	1
2	700-800	176C544G01	$1^1/_8$-12	2
3	700-800	176C544G02	$1^1/_8$-12	2

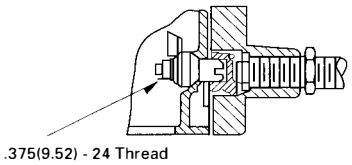

Figure 1 (Plug-In Type)

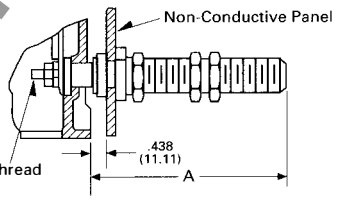

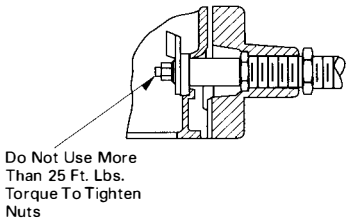

Figure 2 (Front Removable Bolted Type)

Reproduced from drawing 457D265

Dimensions in parentheses in millimeters

Cutler-Hammer
Westinghouse &
Cutler-Hammer Products
Five Parkway Center
Pittsburgh, Pennsylvania, U.S.A. 15220

Printed in U.S.A.
January 1995

www . ElectricalPartManuals . com

Cutler-Hammer
Westinghouse &
Cutler-Hammer Products
Five Parkway Center
Pittsburgh, Pennsylvania, U.S.A. 15220

Westinghouse Series C® Molded Case Circuit Breakers M-Frame 400-800 Amperes

January 1995
New Information
Mailed to: E, D, C/29-100A, 31-400A, 31-500A

Type MD Two- and Three-Pole

Type MD Two- and Three-Pole Breakers

Front View

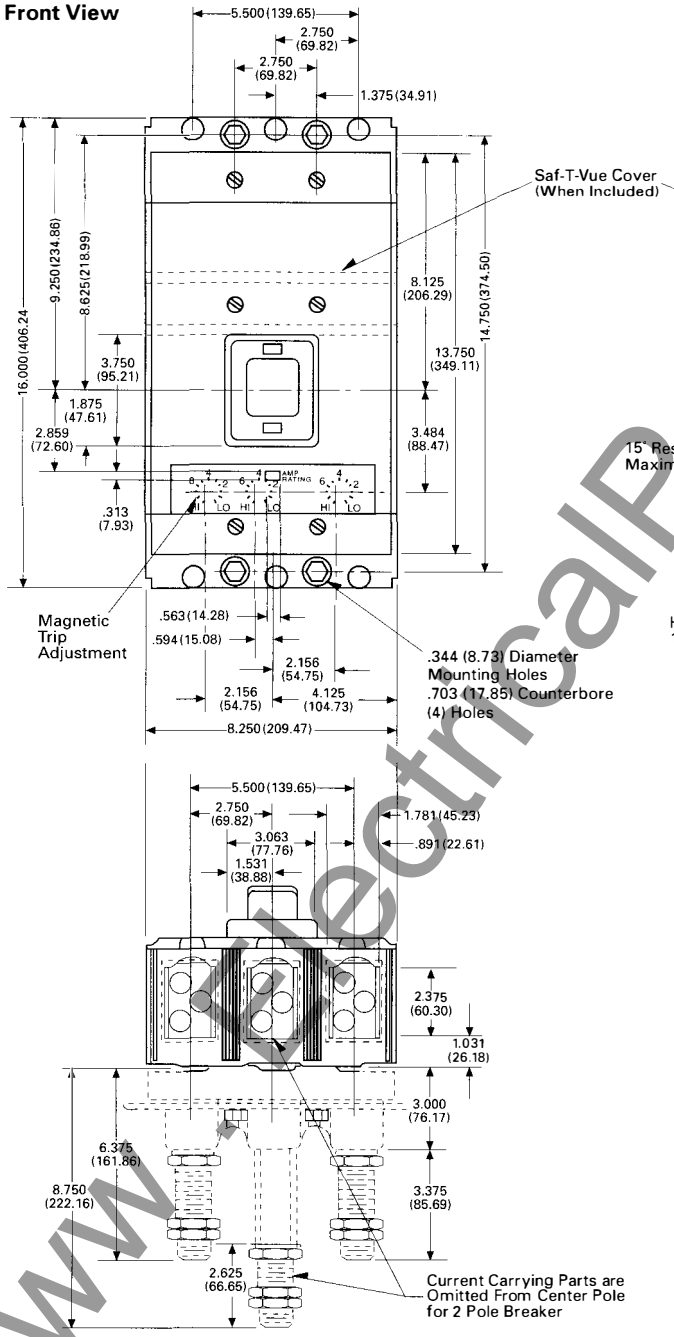

Side View

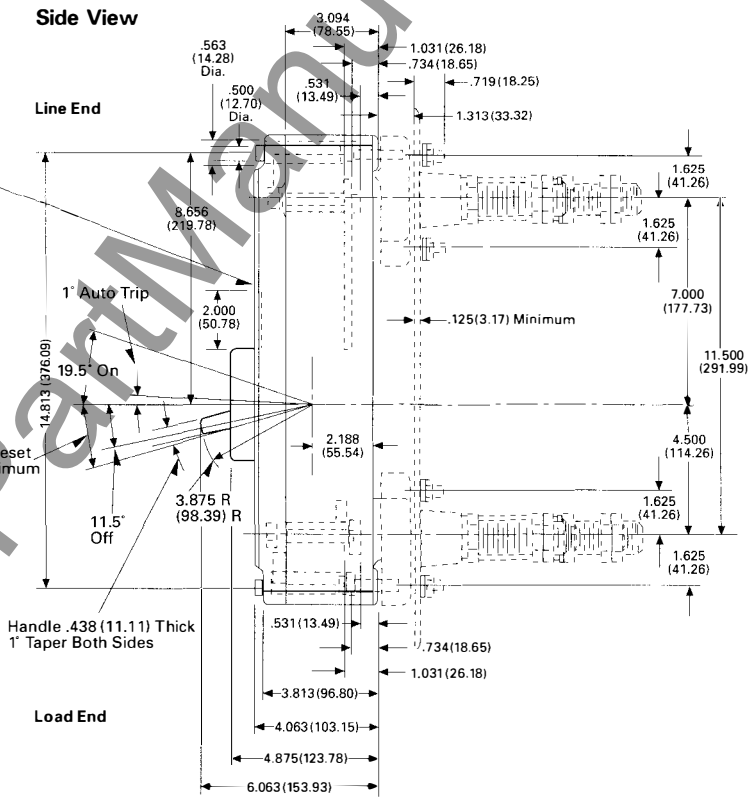

Handle Forces (From End of Handle)	
On	50 lbs. (22.68 kgs.)
Off	24 lbs. (10.89 kgs.)
Reset	60 lbs. (27.22 kgs.)

Reproduced from drawing 457D265

Dimensions in parentheses in millimeters

www.ElectricalPartManuals.com

Cutler-Hammer
Westinghouse &
Cutler-Hammer Products
Five Parkway Center
Pittsburgh, Pennsylvania, U.S.A. 15220

Westinghouse Series C® Molded Case Circuit Breakers M-Frame 400-800 Amperes

January 1995
New Information
Mailed to: E, D, C/29-100A, 31-400A, 31-500A

Type MDS Two- and Three-Pole

Type MDS Two- and Three-Pole Breakers

Front View

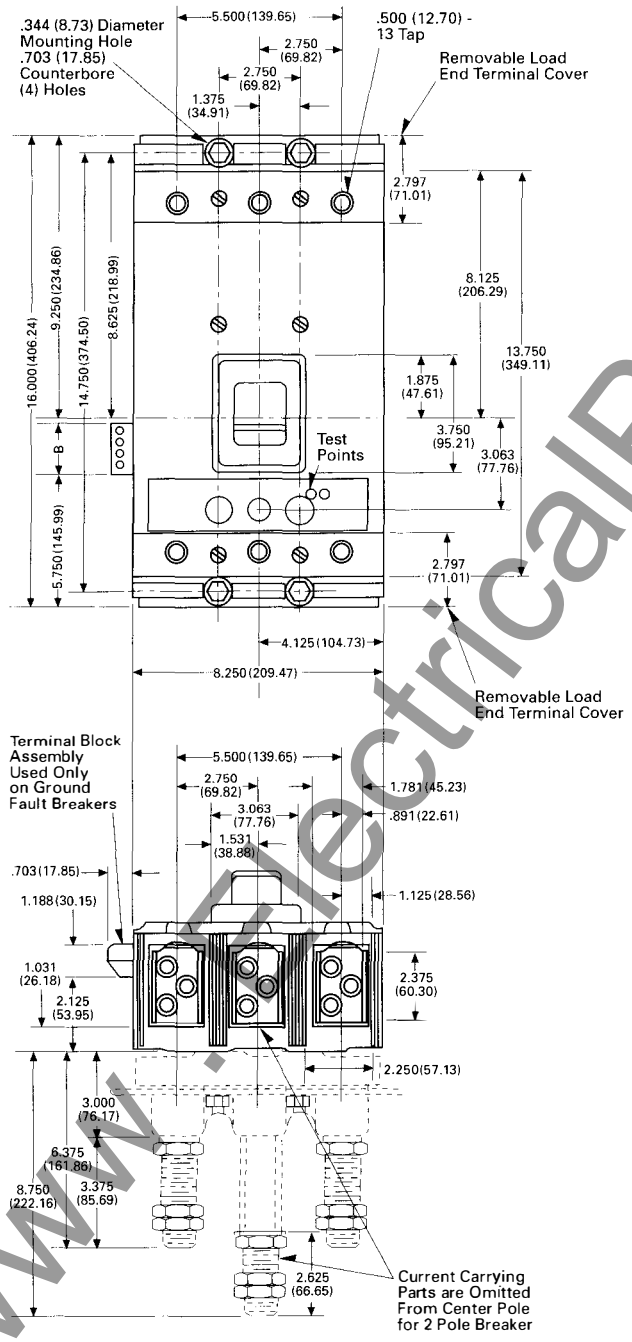

Side View

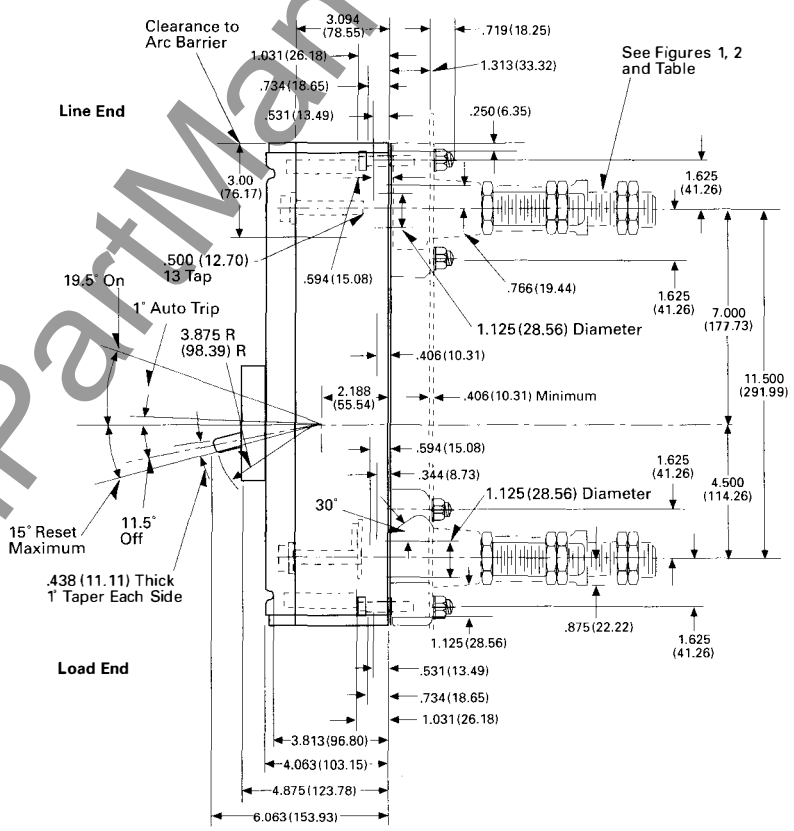

Handle Forces (From End of Handle)

On	50 lbs. (22.68 kgs.)
Off	24 lbs. (10.89 kgs.)
Reset	60 lbs. (27.22 kgs.)

Reproduced from drawing 2605D21
Dimensions in parentheses in millimeters

www.ElectricalPartManuals.com

Westinghouse Series C® Molded Case Circuit Breakers, M-Frame, 400-800 Amperes

Type MDS Two- and Three-Pole Breakers, Drilling Plans

For Mounting Block
(Front Connected Terminals)

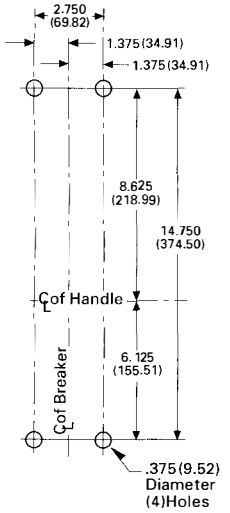

For Rear Connected Studs

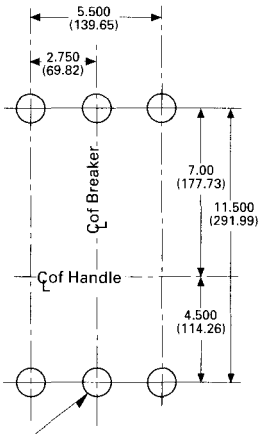

.813 (20.63) Diameter Hole for 250 Amps to 400 Amps	6 Holes for 3 Pole Breaker 4 Holes for 2 Pole Breaker
1.063 (26.98) Diameter Hole for 450 Amps to 600 Amps	Omit 2 Center Holes for 2 Pole Breaker
1.188 (30.15) Diameter Hole for 700 Amps to 800 Amps	

For Plug-In Adapter Kit

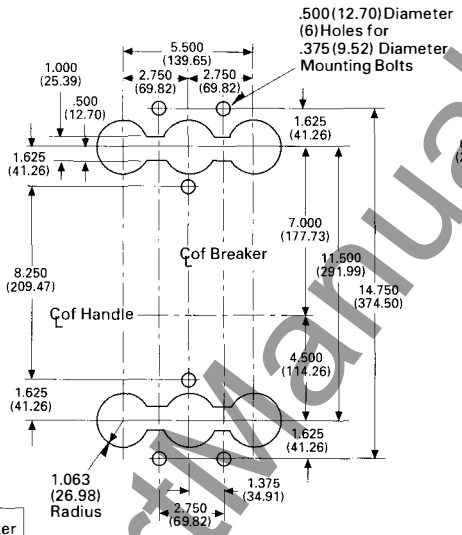

Front Cover Cutout

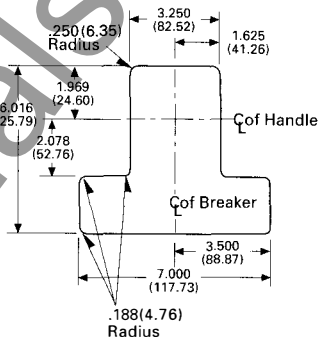

Front Connected Terminals
(Must be Ordered Separately)

Amp Rating	Catalog Number	Wire Size Number of Cables
For Al/Cu Cable		
600	TA700MA1	(2) #1-500 MCM
800	TA800MA2	(3) 3/0-400 MCM
For Copper Cable		
600	T600MA1	(2) 2/0-500 MCM
800	T800MA1	(3) 3/0-300 MCM

Rear Connected Studs
2 Required Per Pole (Not Supplied With Breaker)

Stud Ampere Rating	Stud Style Number	Thread Size	Dimension A
250-400	314C960G04	$^3/_4$-16	$5^{29}/_{32}$
250-400	314C960G05	$^3/_4$-16	$8^{13}/_{32}$
250-400	314C960G06	$^3/_4$-16	$10^{29}/_{32}$
450-600	314C960G07	1-12	$5^{29}/_{32}$
450-600	314C960G08	1-12	$8^{13}/_{32}$
450-600	314C960G09	1-12	$10^{29}/_{32}$
700-800	314C960G10	$1^1/_8$-12	$5^{29}/_{32}$
700-800	314C960G11	$1^1/_8$-12	$8^{13}/_{32}$
700-800	314C960G12	$1^1/_8$-12	$10^{29}/_{32}$

Plug-In Adapter Kit
1 Kit Per Breaker (Not Supplied With Breaker)

Poles	Ampere Rating	Kit Style Number	Thread Size	Fig.
2	125-600	313C644G27	$1^1/_8$-12	1
3	125-600	313C644G28	$1^1/_8$-12	1
2	700-800	313C544G01	$1^1/_8$-12	2
3	700-800	313C544G02	$1^1/_8$-12	2

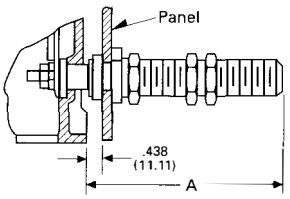

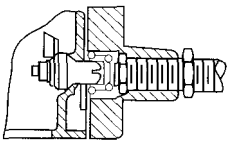

Figure 1

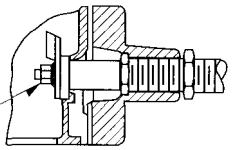

Figure 2

Reproduced from drawing 260D521

Dimensions in parentheses in millimeters

Cutler-Hammer
Westinghouse &
Cutler-Hammer Products
Five Parkway Center
Pittsburgh, Pennsylvania, U.S.A. 15220

Printed in U.S.A.
January 1995

www.ElectricalPartManuals.com

Cutler-Hammer
Westinghouse &
Cutler-Hammer Products
Five Parkway Center
Pittsburgh, Pennsylvania, U.S.A. 15220

January 1995
New Information
Mailed to: E, D, C/29-100A, 31-400A, 31-500A

Type ND Two- and Three-Pole

Westinghouse Series C® Molded Case Circuit Breakers N-Frame 400-1200 Amperes

Type ND Two- and Three-Pole Breakers

Front View

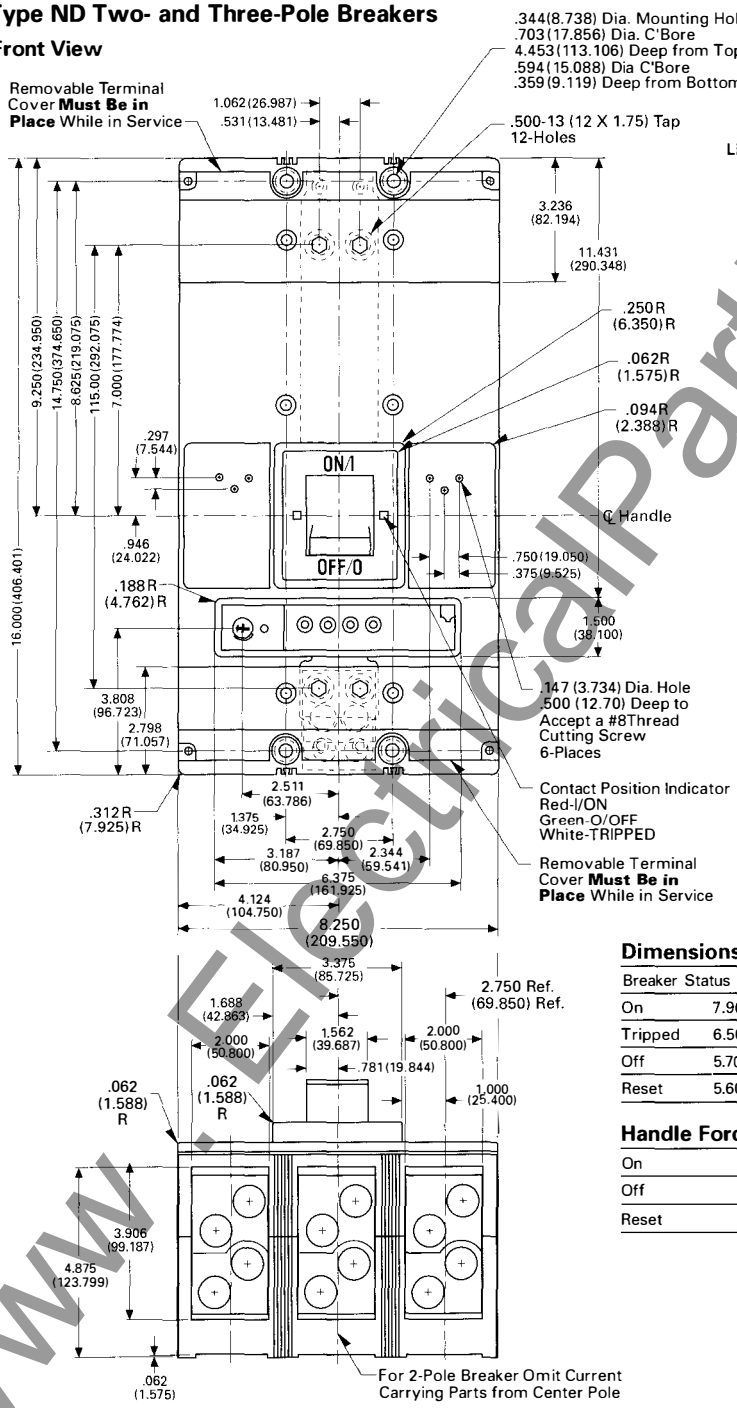

Side View

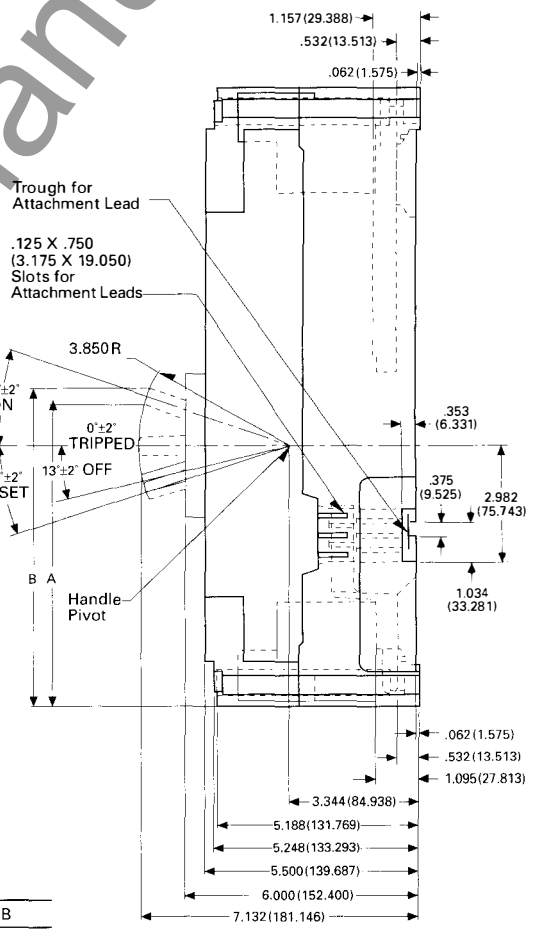

Dimensions

Breaker Status	A	B
On	7.90 (200.66)	8.30 (210.82)
Tripped	6.50 (165.10)	6.90 (175.26)
Off	5.70 (144.78)	6.10 (154.94)
Reset	5.60 (142.24)	6.00 (152.40)

Handle Forces (At Handle ℄)

On	130 lbs. (58.97 kgs.)
Off	105 lbs. (47.63 kgs.)
Reset	160 lbs. (72.57 kgs.)

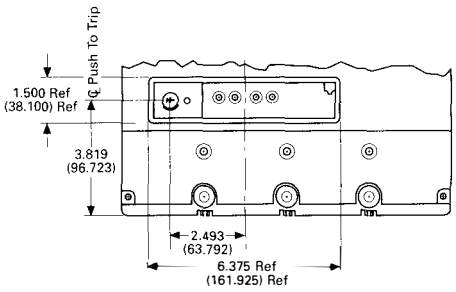

Reproduced from drawing 1494D64

Dimensions in parentheses in millimeters

www.ElectricalPartManuals.com

Westinghouse Series C Molded Case Circuit Breakers, N-Frame, 400-1200 Amperes

Type ND Two- and Three-Pole Breakers, *Continued*

Drilling Plans

Rear Connected

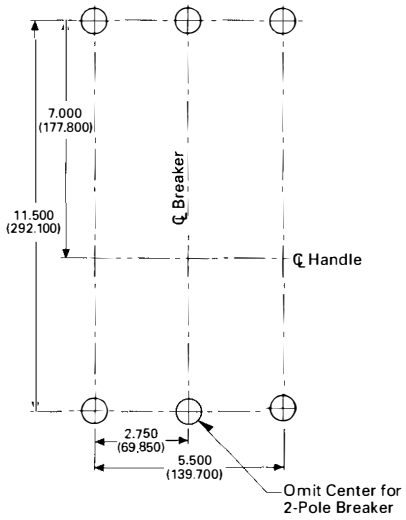

Front Connected

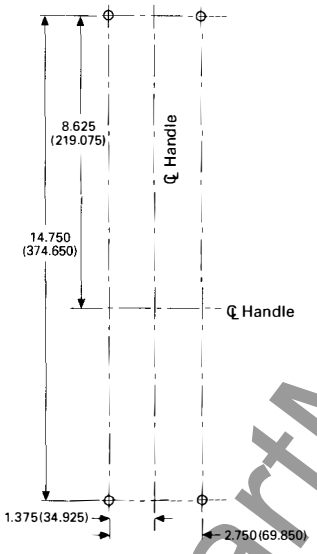

Front Cover Cutout

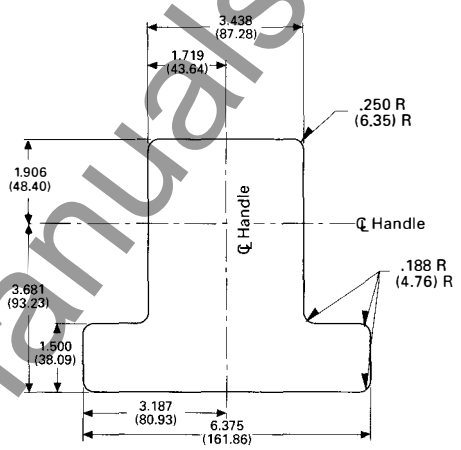

Line End

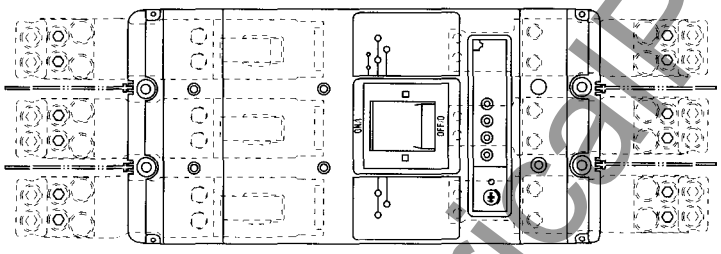

Load End

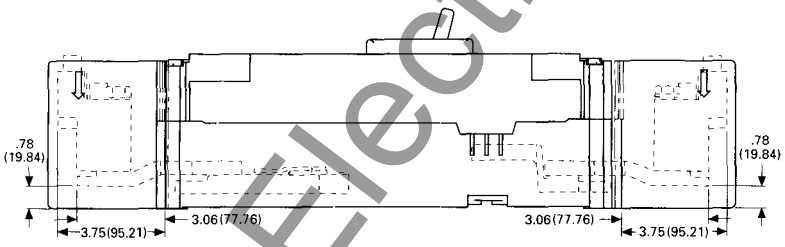

Terminal Arrangements

Catalog Number	Wire Range	Number of Cables	Torque Lb-in
Aluminum or Copper Cable			
TA700NB1	#1-500 MCM	2	375
TA1000NB1	3/0-400 MCM	3	375
TA1200NB1	4/0-500 MCM	4	375
TA1201NB1	500-750 MCM	3	450
Copper Cable Only			
T700NB1	2/0-500 MCM	2	300
T1000NB1	3/0-500 MCM	3	300
T1200NB3	3/0-400 MCM	4	275

Drilling Plan for Rear Connecting Studs

Amp Rating	Hole Diameter
700 & 800	1.188 (30.175) Diameter
900-1200	1.312 (33.325) Diameter

Reproduced from drawing 1494D64

Dimensions in parentheses in millimeters

Cutler-Hammer
Westinghouse &
Cutler-Hammer Products
Five Parkway Center
Pittsburgh, Pennsylvania, U.S.A. 15220

www.ElectricalPartManuals.com

Cutler-Hammer
Westinghouse &
Cutler-Hammer Products
Five Parkway Center
Pittsburgh, Pennsylvania, U.S.A. 15220

Westinghouse Series C® Molded Case Circuit Breakers R-Frame 800-2500 Amperes

January 1995
New Information
Mailed to: E, D, C/29-100A, 31-400A, 31-500A

Types RD, RDC Three-Pole

Types RD, RDC Three-Pole Breakers, 1600 and 2000 Amp Frames

Front View

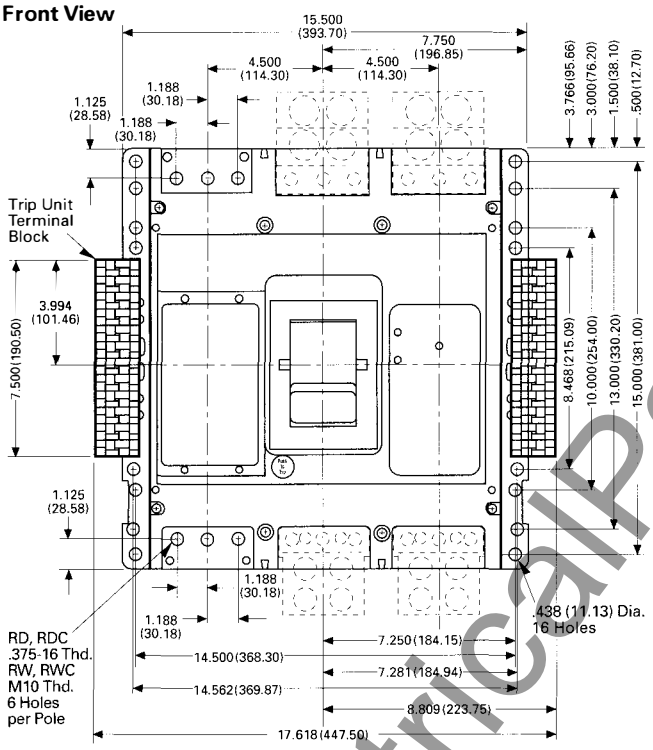

Side View

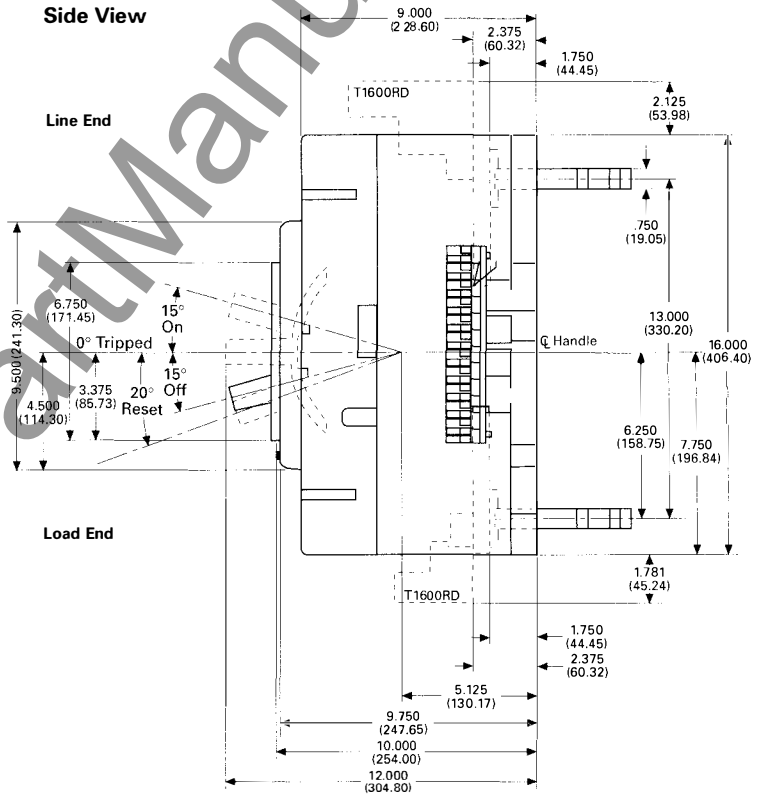

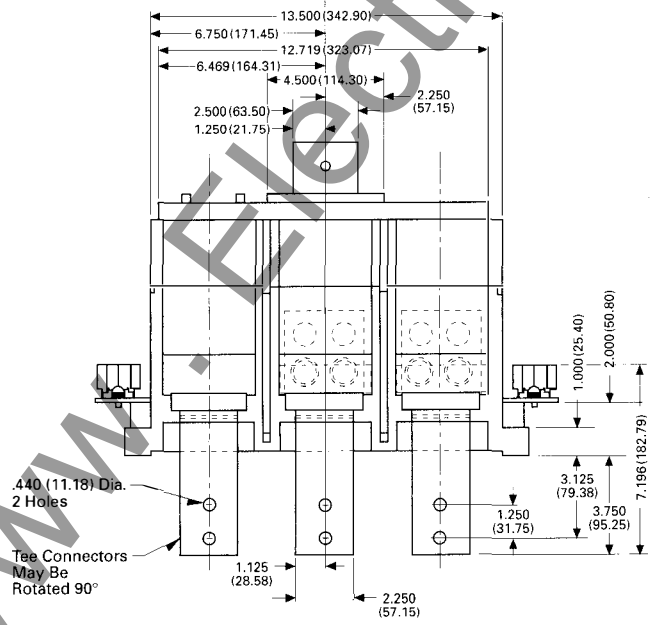

Terminal Arrangements

Terminal Catalog Number	Terminal Material (Body)	Screw Head Type	Wire Range	Wire Type	Torque
T1600RD	Copper	Socket	1-600[4] (50-300[4])	Cu	375 Lb-in. (42.38 Nm)
TA1600RD	Aluminum	Socket	500-1000[4] (300-500[4])	Cu/Al	550 Lb-in. (62.15 Nm)

Handle Forces①

On	140 lbs.
Off	80 lbs.
Reset	75 lbs.

① Measurements taken approximately 1/4 in. from end of handle.

Reproduced from drawings 1495D63 and 1495D67

Dimensions in parentheses in millimeters

www.ElectricalPartManuals.com

Westinghouse Series C® Molded Case Circuit Breakers, R-Frame, 800-2500 Amperes

Types RD, RDC Three-Pole Breakers, 2500 Amp Frame, *Continued*

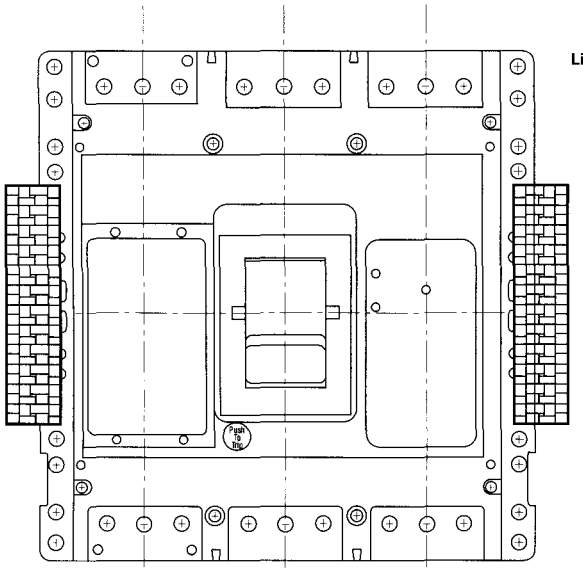

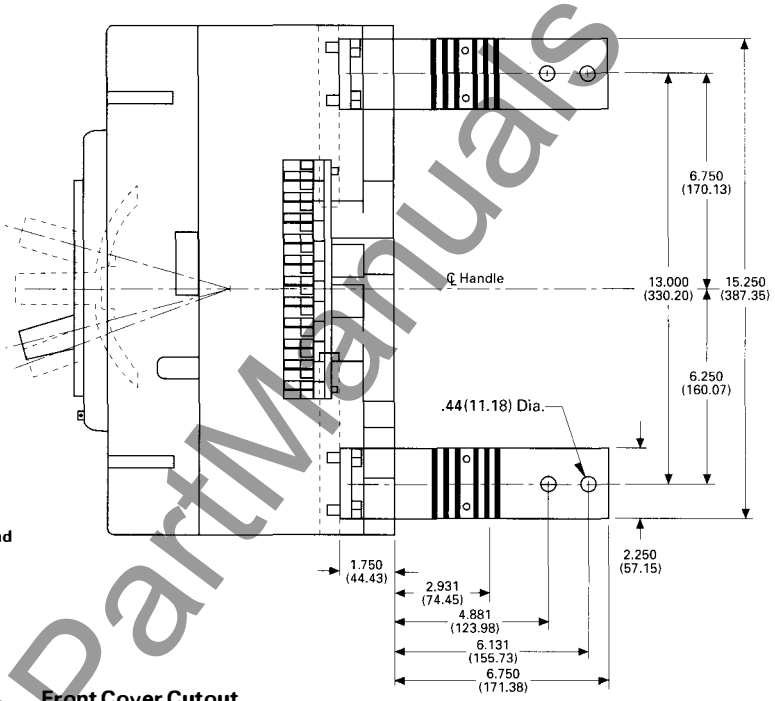

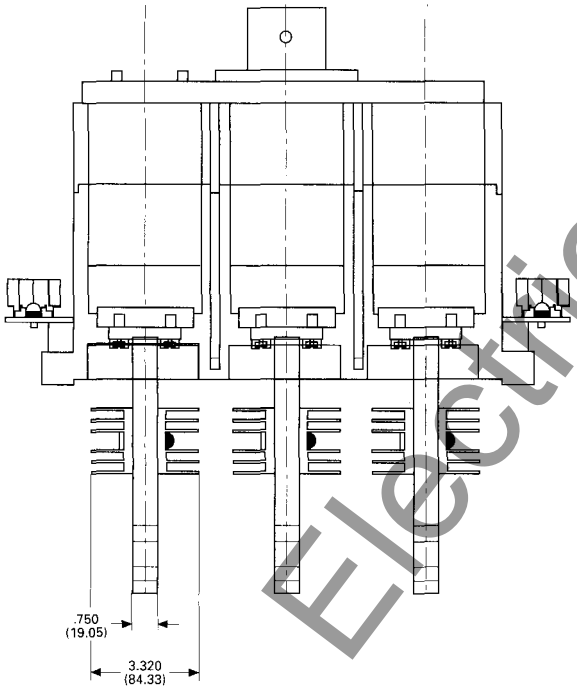

Front Cover Cutout and Drilling Plan

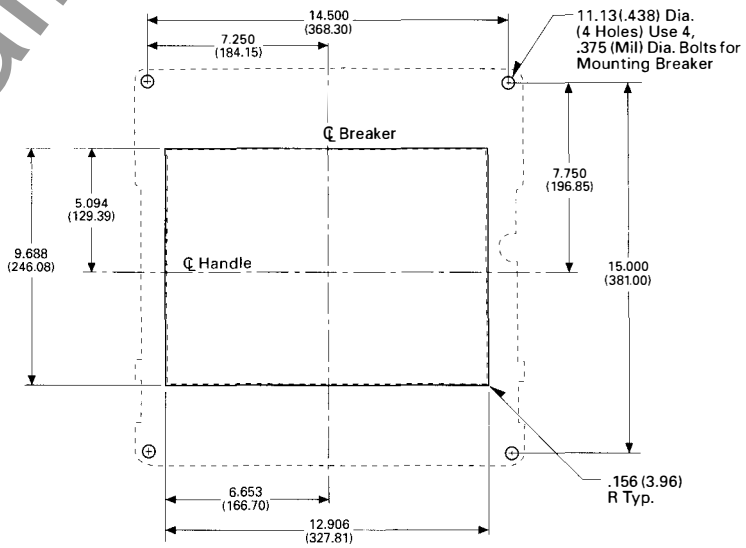

Reproduced from drawings 1495D63 and 1495D67 **Dimensions in parentheses in millimeters**

Cutler-Hammer
Westinghouse &
Cutler-Hammer Products
Five Parkway Center
Pittsburgh, Pennsylvania, U.S.A. 15220

www.ElectricalPartManuals.com

Cutler-Hammer
Westinghouse &
Cutler-Hammer Products
Five Parkway Center
Pittsburgh, Pennsylvania, U.S.A. 15220

January 1995
New Information
Mailed to: E, D, C/29-100A, 31-400A, 31-500A

Types RD, RDC Four-Pole

Westinghouse Series C® Molded Case Circuit Breakers R-Frame 800-2500 Amperes

Types RD, RDC Four-Pole Breakers, 1600 and 2000 Amp Frames

Front View

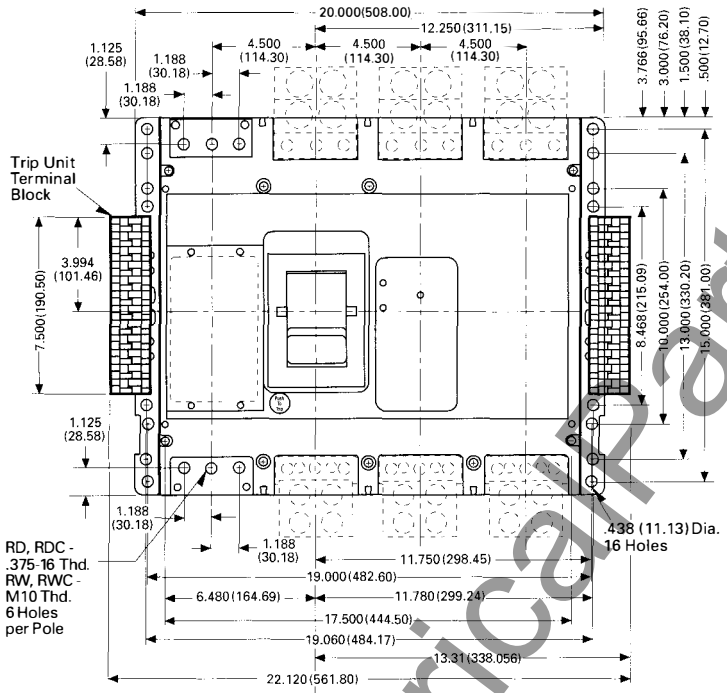

Side View

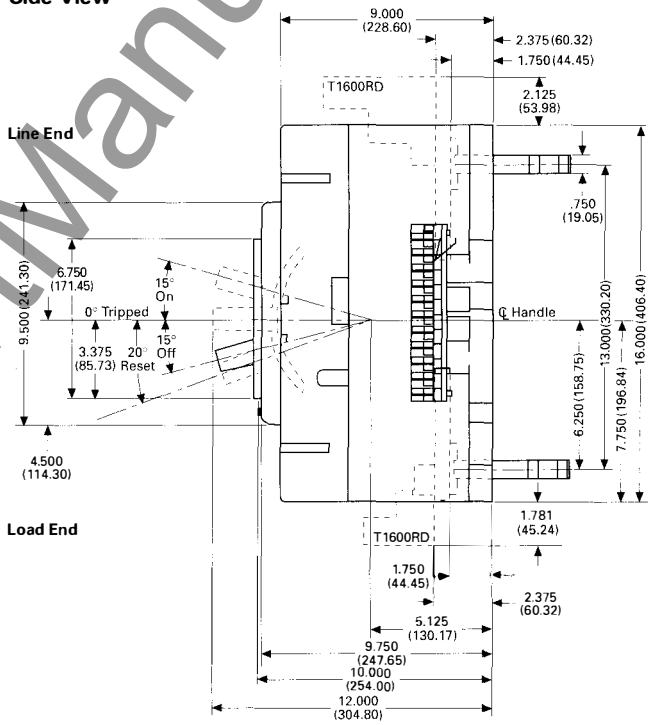

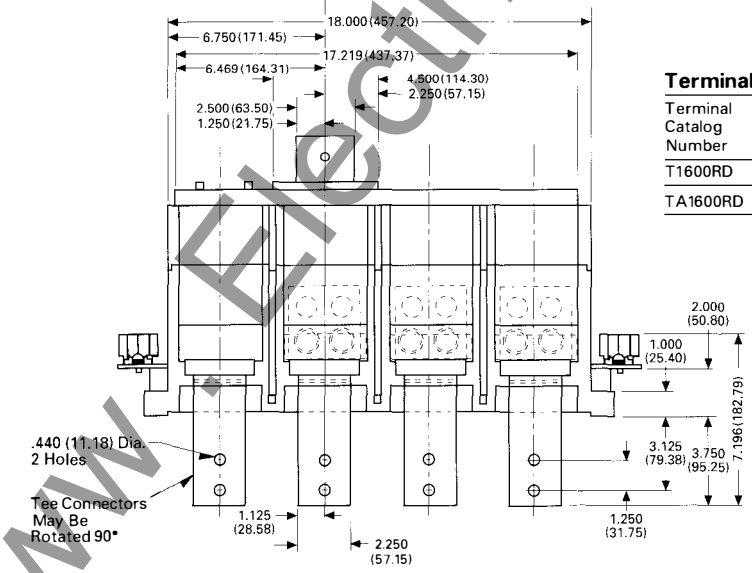

Terminal Arrangements

Terminal Catalog Number	Terminal Material (Body)	Screw Head Type	Wire Range	Wire Type	Torque
T1600RD	Copper	Socket	1-600[4] (50-300[4])	Cu	375 Lb-in. (42.38 Nm)
TA1600RD	Aluminum	Socket	500-1000[4] (300-500[4])	Cu/Al	550 Lb-in. (62.15 Nm)

Handle Forces①

On	140 lbs.
Off	80 lbs.
Reset	75 lbs.

① Measurements taken approximately 1/4 in. from end of handle.

Reproduced from drawings 1495D63, 1495D64 and 1495D68 **Dimensions in parentheses in millimeters**

www.ElectricalPartManuals.com

Westinghouse Series C® Molded Case Circuit Breakers, R-Frame, 800-2500 Amperes

Types RD, RDC Four-Pole Breakers, 2500 Amp Frame, *Continued*

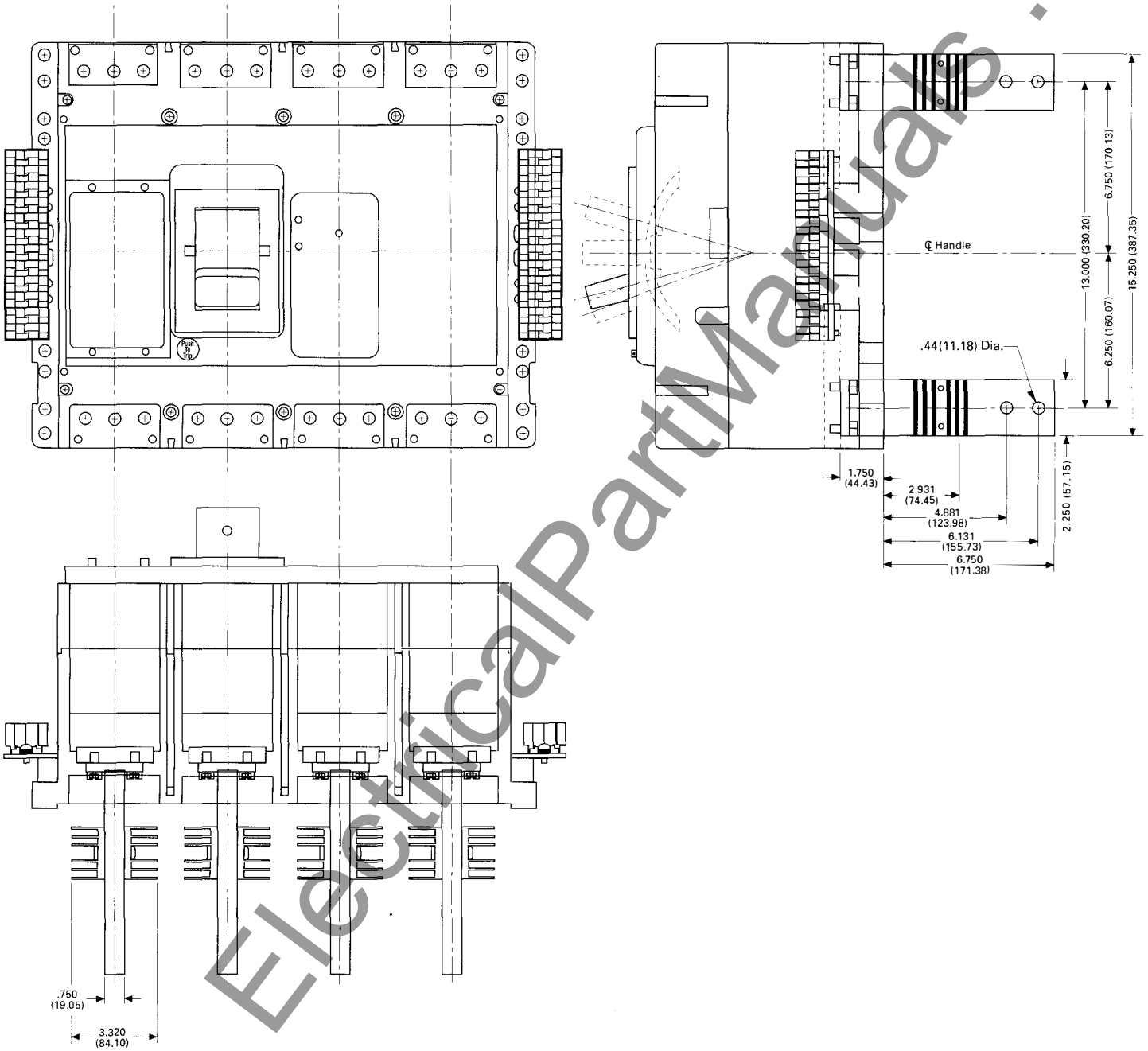

Reproduced from drawings 1495D64 and 1495D68 **Dimensions in parentheses in millimeters**

Cutler-Hammer
Westinghouse &
Cutler-Hammer Products
Five Parkway Center
Pittsburgh, Pennsylvania, U.S.A. 15220

www.ElectricalPartManuals.com

Cutler-Hammer
Westinghouse &
Cutler-Hammer Products
Five Parkway Center
Pittsburgh, Pennsylvania, U.S.A. 15220

Westinghouse Series C® Molded Case Circuit Breakers R-Frame 800-2500 Amperes

January 1995
New Information
Mailed to: E, D, C/29-100A, 31-400A, 31-500A

Type FD Three-Pole

Types RD 2000-Ampere Terminal Extensions

Front View

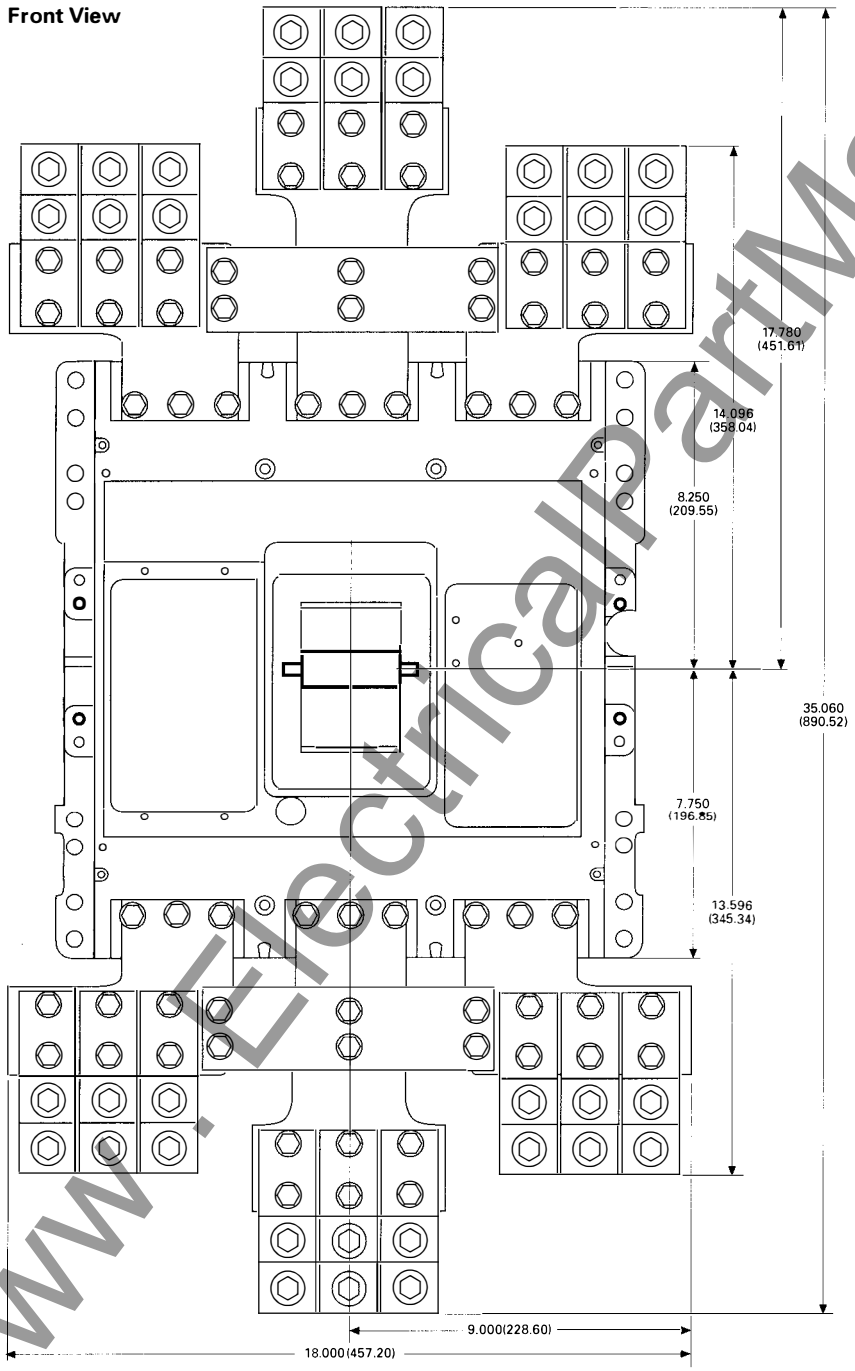

Side View

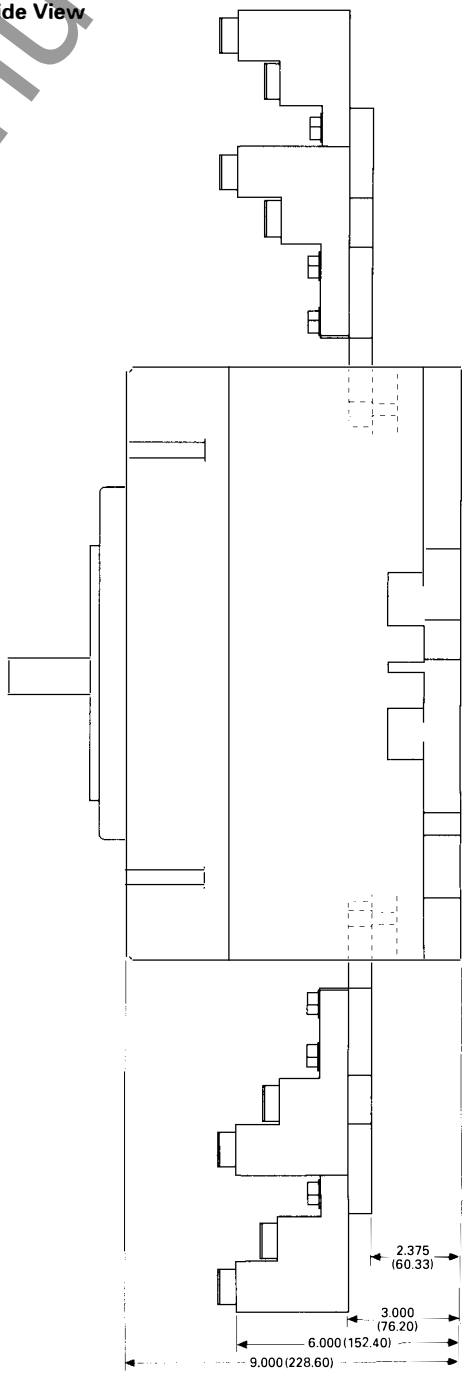

Reproduced from drawing 1495D73

Dimensions in parentheses in millimeters

www.ElectricalPartManuals.com

Westinghouse Series C® Molded Case Circuit Breakers, R-Frame, 800-2500 Amperes

Type RD 2000-Ampere Terminal Extensions, *Continued*

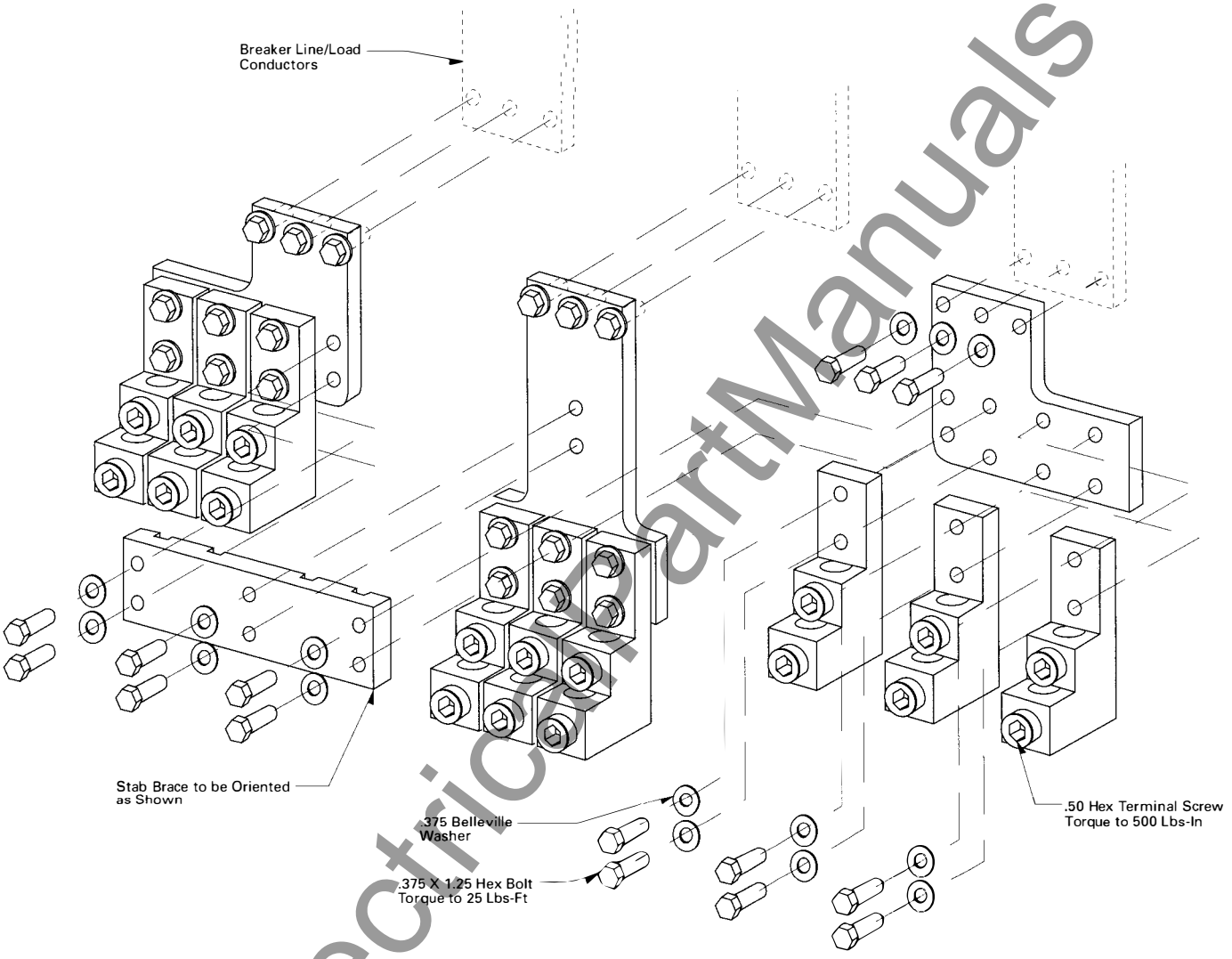

Reproduced from drawing 1495D73 **Dimensions in parentheses in millimeters**

Cutler-Hammer
Westinghouse &
Cutler-Hammer Products
Five Parkway Center
Pittsburgh, Pennsylvania, U.S.A. 15220

Printed in U.S.A.
January 1995

www . ElectricalPartManuals . com

Cutler-Hammer
Westinghouse &
Cutler-Hammer Products
Five Parkway Center
Pittsburgh, Pennsylvania, U.S.A. 15220

January 1995
New Information
Mailed to: E, D, C/29-100A, 31-400A, 31-500A

Type FCL Current Limit-R
Current Limiting Breakers
15-100 Amperes

Westinghouse AB DE-ION® Current Limiting Circuit Breakers

Type FCL Current Limiting Breaker

Front View

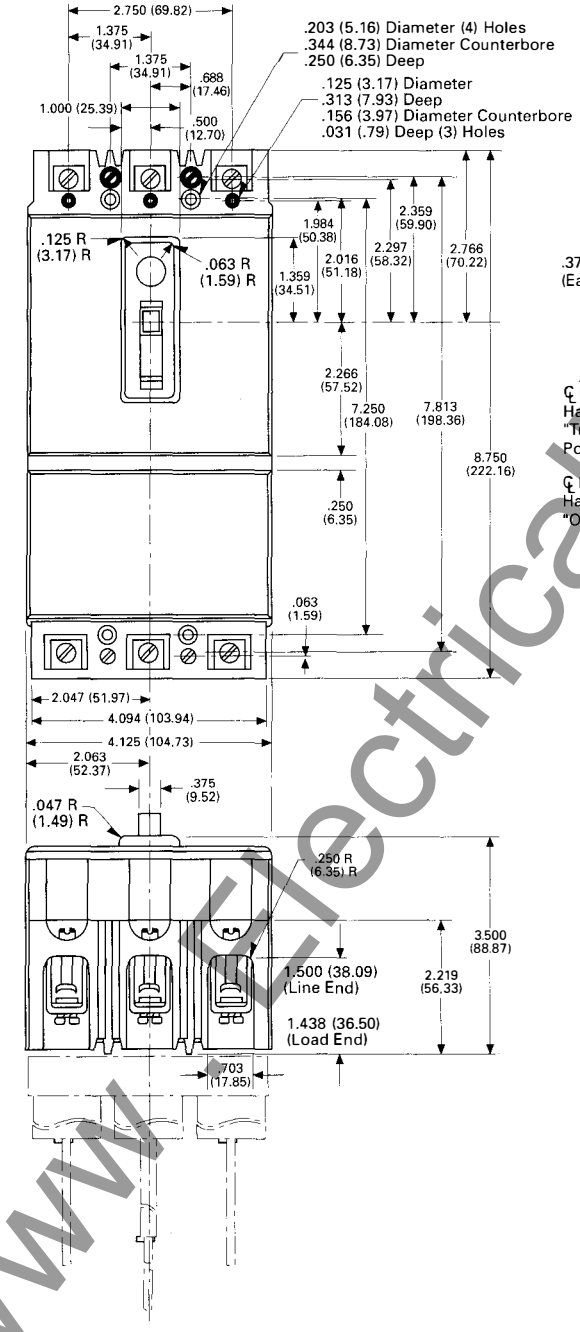

Side View

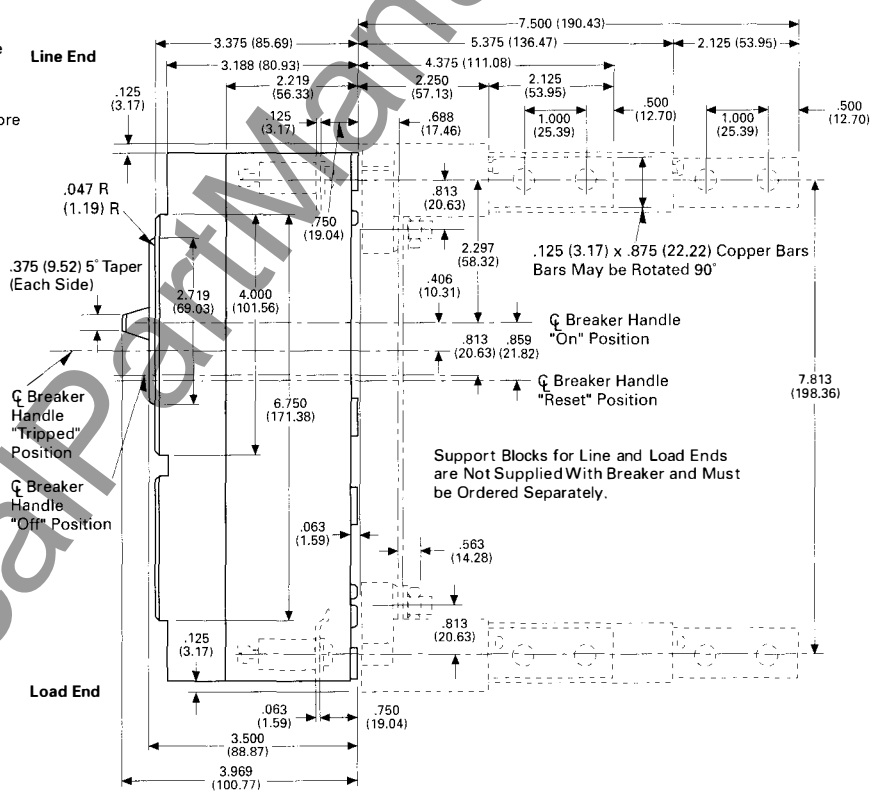

Reproduced from drawing 2614D90

Dimensions in parentheses in millimeters

www.ElectricalPartManuals.com

Westinghouse AB DE-ION® Current Limiting Circuit Breakers

Type FCL Current Limiting Breaker, Drilling Plans

For Mounting Bolts

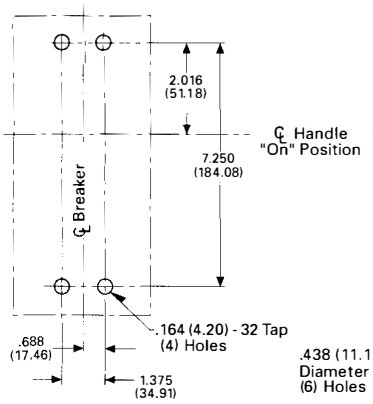

For Rear Connected Studs

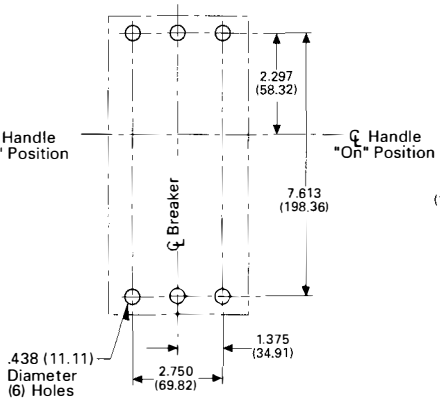

For Plug-In Blocks

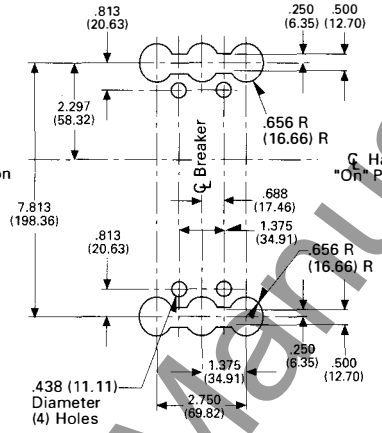

Front Cover Cutout

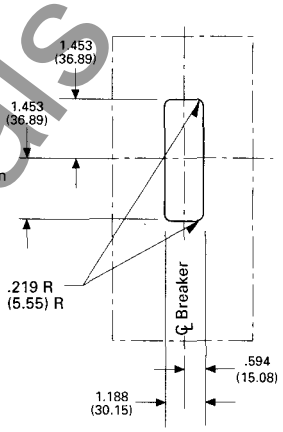

Terminal Arrangements

Wire Connection

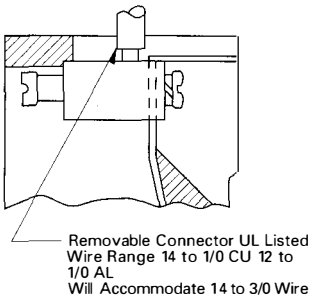

Bus Connection

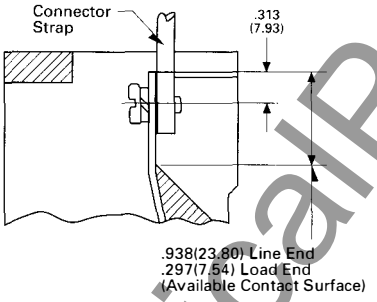

Stud Connection

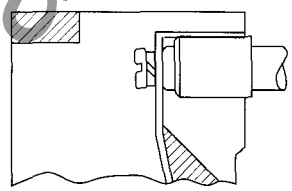

Plug-In or Bolt-On Connection

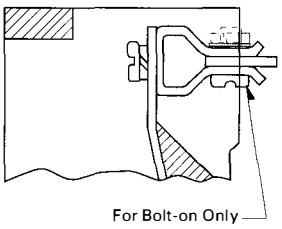

For 15- to 100-Amp Breakers

Stud Ampere Rating	Stud Style Number	Panel Thickness A	Tube Length B	C	Tube Style Number	D	E
100 A Short	451D874G01	1.000 (25.39)	1.063 (29.98)		32B9446H20		3.625 (92.04)
100 A Short	451D874G01	.688 (17.46) - .938 (23.80)	1.375 (34.91)		32B9446H21		3.625 (92.04)
100 A Short	451D874G01	.375 (9.52) - .625 (15.87)	1.688 (42.85)		32B9446H22		3.625 (92.04)
100 A Short	451D874G01	.250 (6.35) - .313 (7.93)	2.000 (76.17)		32B9446H23		3.625 (92.04)
100 A Long	451D874G02	1.000 (25.39)		3.438 (87.28)	32B9446H24	6.125 (155.91)	
100 A Long	451D874G02	.688 (17.46) - .938 (23.80)		3.750 (95.21)	32B9446H25	6.125 (155.91)	
100 A Long	451D874G02	.375 (9.52) - .625 (15.87)		4.063 (103.15)	32B9446H26	6.125 (155.91)	
100 A Long	451D874G02	.250 (6.35) - .313 (7.93)		4.375 (111.08)	32B9446H27	6.125 (155.91)	

Ordering instructions. Stud complete consists of one stud assembly and one tube as per chart. Order long and short studs and tubes as required to obtain proper bus spacing.

Rear Connected Studs

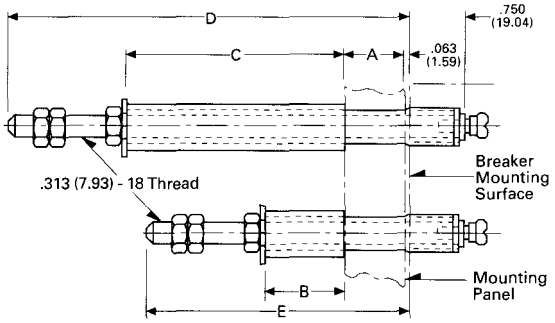

Reproduced from drawing 2614D90

Dimensions in parentheses in millimeters

Cutler-Hammer
Westinghouse &
Cutler-Hammer Products
Five Parkway Center
Pittsburgh, Pennsylvania, U.S.A. 15220

www.ElectricalPartManuals.com

Cutler-Hammer
Westinghouse &
Cutler-Hammer Products
Five Parkway Center
Pittsburgh, Pennsylvania, U.S.A. 15220

January 1995
New Information
Mailed to: E, D, C/29-100A, 31-400A, 31-500A

Type LCL Current Limit-R
Current Limiting Breakers
125-400 Amperes

Westinghouse AB DE-ION® Current Limiting Circuit Breakers

Type LCL Current Limiting Breakers

Front View

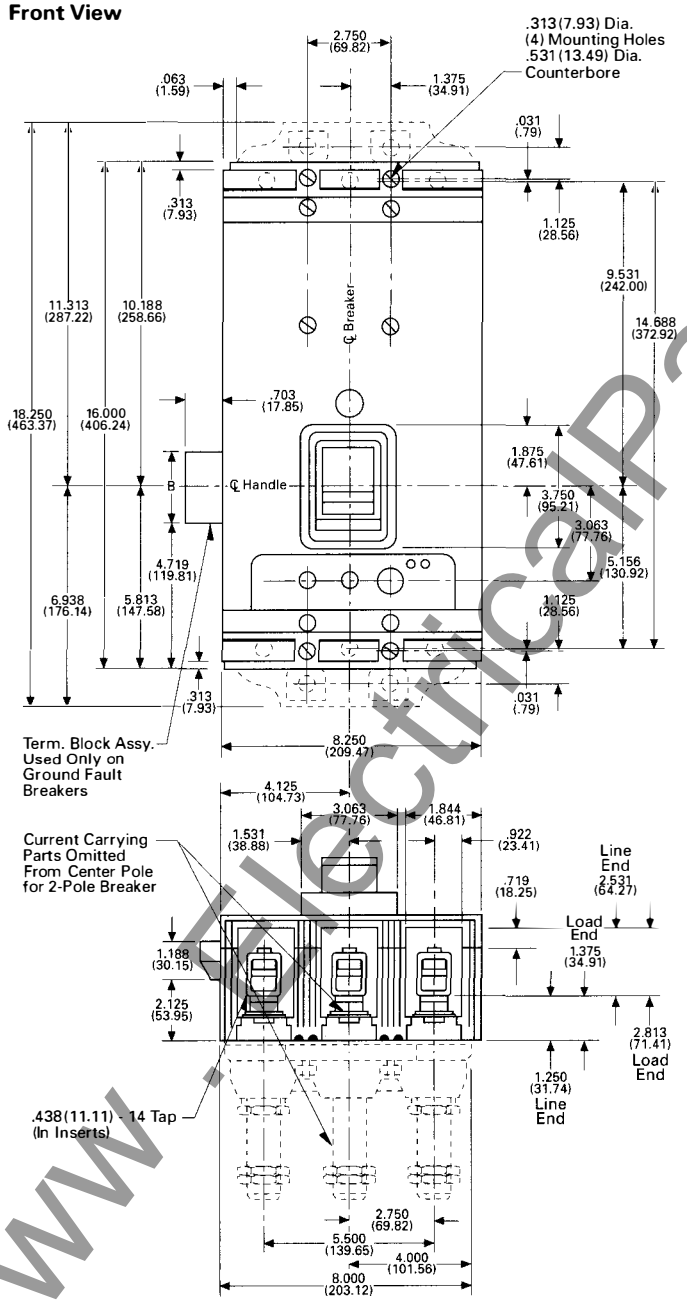

Side View

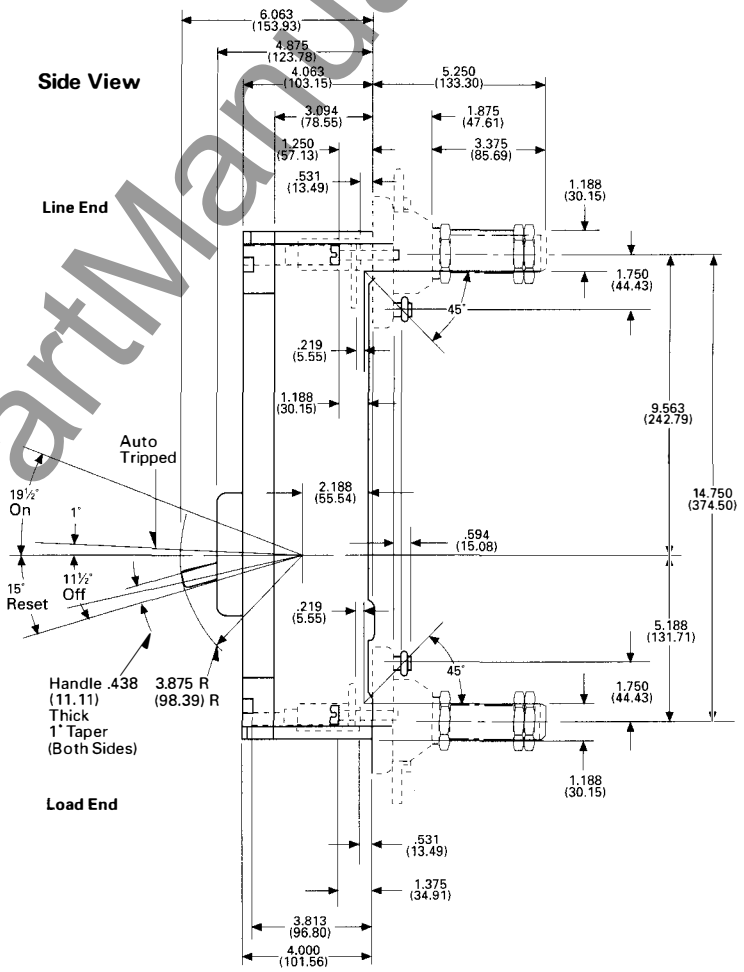

Reproduced from drawing 1371D33

Dimensions in parentheses in millimeters

www.ElectricalPartManuals.com

Westinghouse AB DE-ION® Current Limiting Circuit Breakers

Type LCL Current Limiting Breakers, Drilling Plans

For Plug-In Blocks

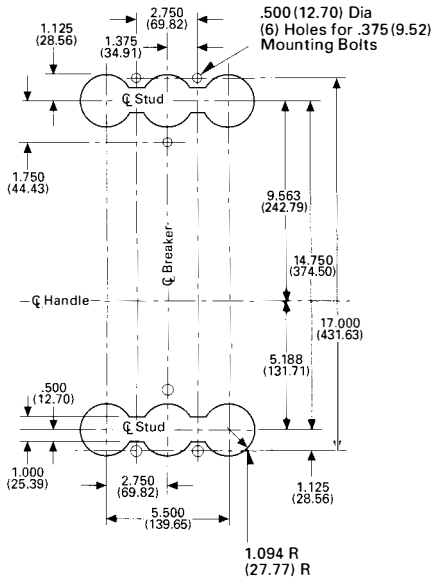

For Rear Connected Studs

(For Non-Conductive Panels)

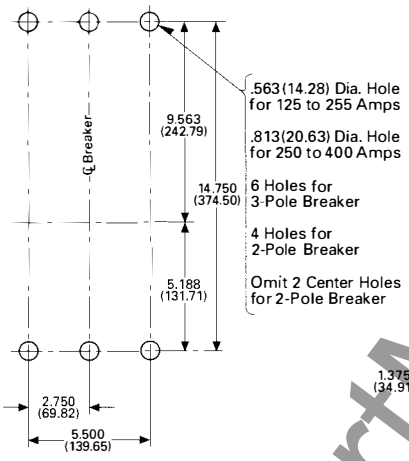

For Mounting Bolts

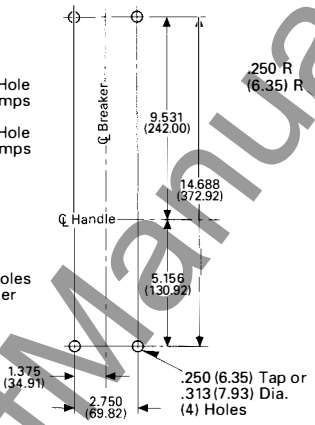

Front Cover Cutout

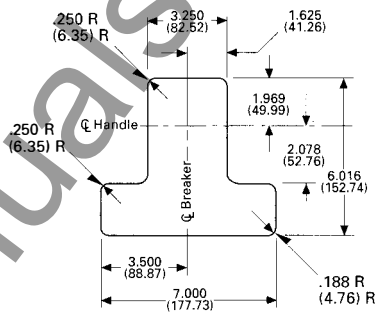

Terminal Arrangements

Cable	Catalog Number	Ampere Rating	Wire Size
For Use With Cu/Al Cable (Supplied as Standard)			
Single	TA225LA1	125-225	#6-350 MCM Cu or #4-350 MCM Al
Double	TA400LA1	250-400	#4-250 MCM Cu/Al Plus 3/0-600 MCM Cu/Al
For Use With Copper Cable Only (Must be Specified)			
Single	TA225LA	125-500	#6-350 MCM
Double	TA400LA	250-400	#4-250 MCM and 3/0-600 MCM

Rear Connected Studs

Stud Ampere Rating	Stud Style Number	Thread Size	Dimension A
125-225	1241345	.500 (12.70) - 13 (330.07)	3.188 (80.93)
125-225	1241392	.500 (12.70) - 13 (330.07)	4.938 (125.36)
125-225	1241346	.500 (12.70) - 13 (330.07)	6.250 (158.69)
250-400	05B7383G15	.750 (19.04) - 16 (406.24)	5.469 (138.85)
250-400	05B7383G16	.750 (19.04) - 16 (406.24)	7.969 (202.33)
250-400	05B7383G17	.750 (19.04) - 16 (406.24)	10.469 (265.80)

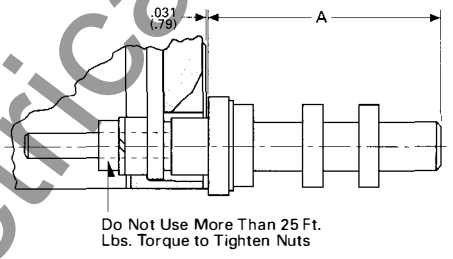

Plug-In Adapter Kit

Poles	Ampere Rating	Kit Style Number	Thread Size
2	125-400	313C644G25	.750 (19.04) - 16 (406.24)
3	125-400	313C644G26	.750 (19.04) - 16 (406.24)

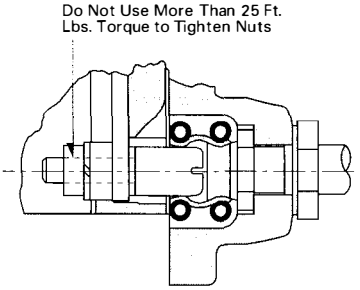

Reproduced from drawing 1371D33
Dimensions in parentheses in millimeters

Cutler-Hammer
Westinghouse &
Cutler-Hammer Products
Five Parkway Center
Pittsburgh, Pennsylvania, U.S.A. 15220

www . ElectricalPartManuals . com

January 1995
New Information
Mailed to: E, D, C/29-100A, 31-400A, 31-500A

Type FB Tri-Pac® Breaker

Westinghouse AB DE-ION® Current Limiting Circuit Breakers

Type FB Tri-Pac Breaker

Front View

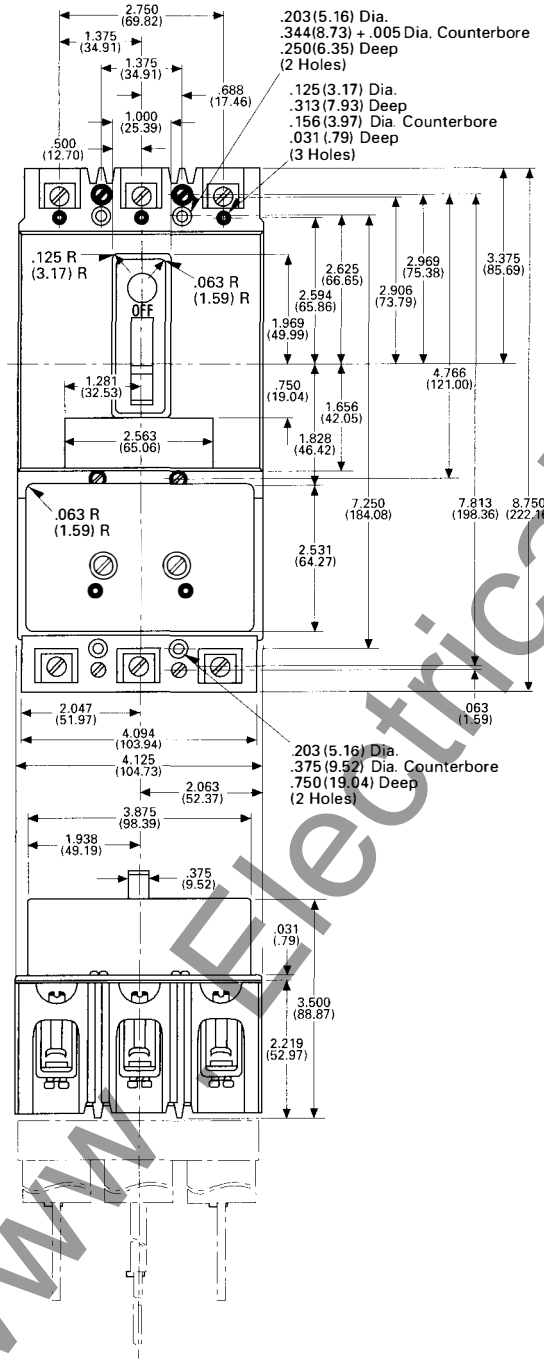

Side View

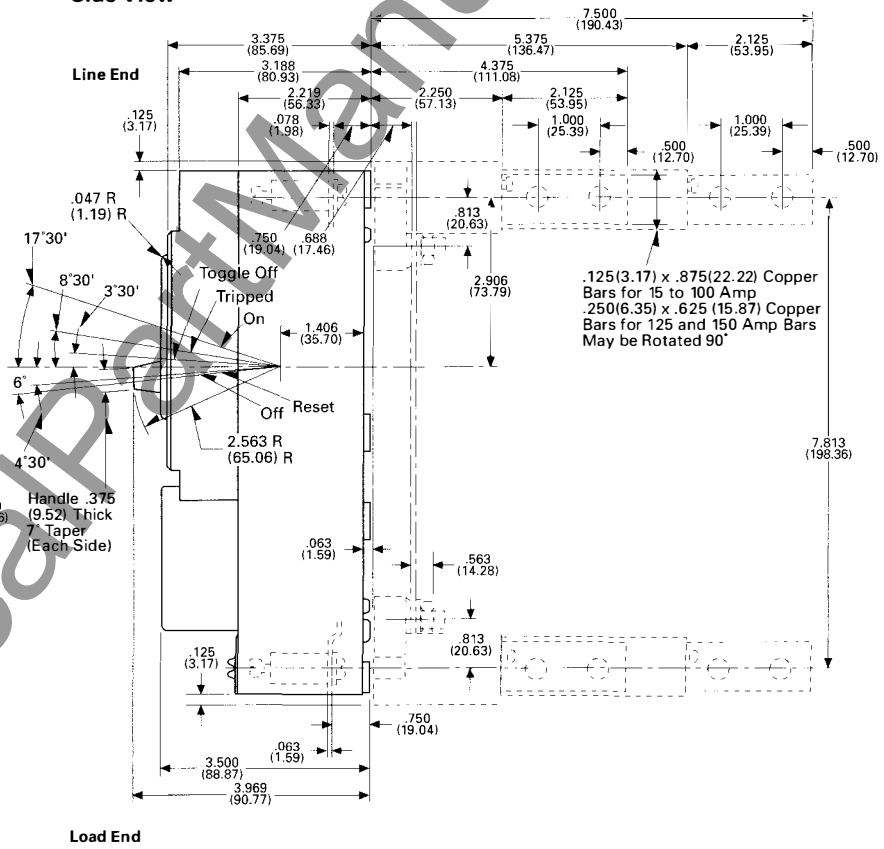

Reproduced from drawing 4979D67
Dimensions in parentheses in millimeters

www.ElectricalPartManuals.com

Westinghouse AB DE-ION® Current Limiting Circuit Breakers

Type FB Tri-Pac Circuit Breaker, Drilling Plans

For Mounting Bolts

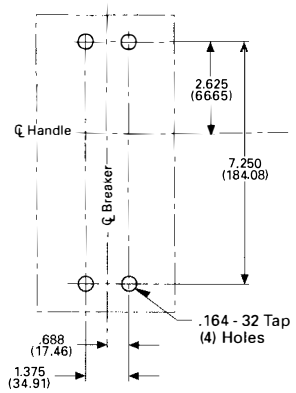

For Rear Connected Studs

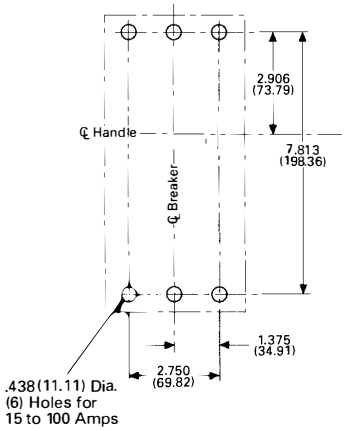

For Plug-In Blocks

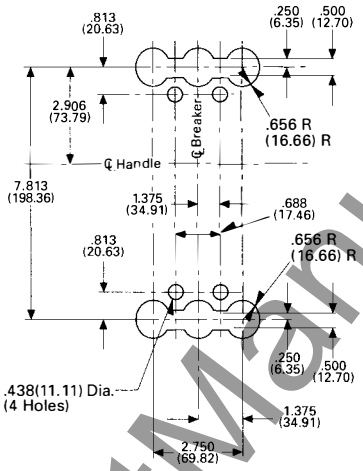

Front Cover Cutout

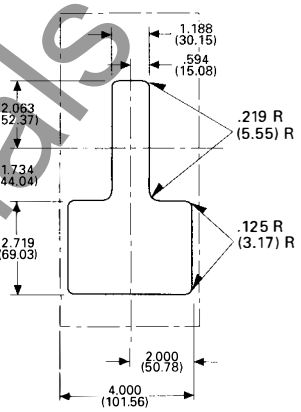

Terminal Arrangements

Wire Connection

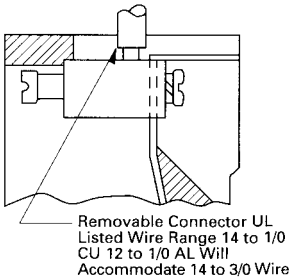

Bus Connection

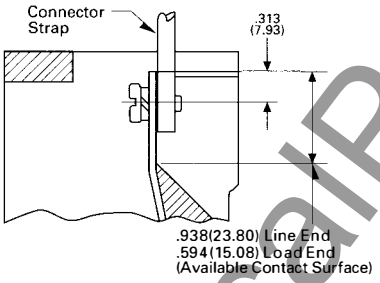

Stud Connection

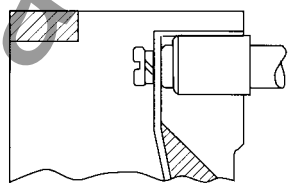

Plug-In or Bolt-On Connection

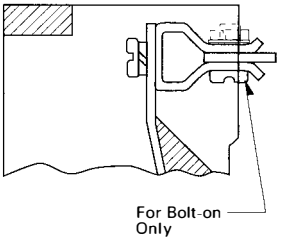

For 15- to 100-Amp Breakers

Stud Ampere Rating Number	Stud Style	Panel Thickness A	Tube Length B	Tube Length C	Tube Style Number	D	E	F
100 A Short	451D874G01	1.000 (25.39)	1.063 (29.98)		32B9446H20			
100 A Short	451D874G01	.688 (17.46) - .938 (23.80)	1.375 (34.91)		32B9446H21			
100 A Short	451D874G01	.375 (9.52) - .625 (15.87)	1.688 (42.85)		32B9446H22	6.125 (155.51)	3.625 (92.04)	.313 (7.93)
100 A Short	451D874G01	.250 (6.35) - .313 (7.93)	2.000 (76.17)		32B9446H23			18.00 (457.02)
100 A Long	451D874G02	1.000 (25.39)		3.438 (87.28)	32B9446H24			
100 A Long	451D874G02	.688 (17.46) - .938 (23.80)		3.750 (95.21)	32B9446H25			
100 A Long	451D874G02	.375 (9.52) - .625 (15.87)		4.063 (103.15)	32B9446H26			
100 A Long	451D874G02	.250 (6.35) - .313 (7.93)		4.375 (111.08)	32B9446H27			

Ordering instructions. Stud complete consists of one stud assembly and one tube as per chart. Order long and short studs and tubes as required to obtain proper bus spacing.

Rear Connected Studs

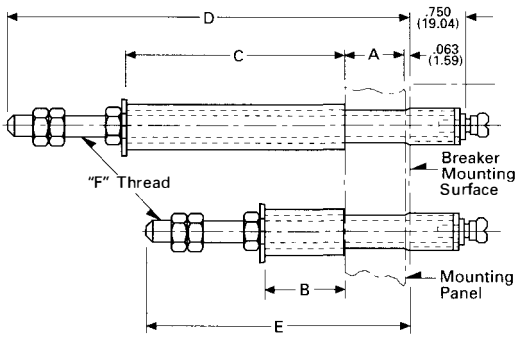

Reproduced from drawing 4979D67

Dimensions in parentheses in millimeters

Cutler-Hammer
Westinghouse &
Cutler-Hammer Products
Five Parkway Center
Pittsburgh, Pennsylvania, U.S.A. 15220

www.ElectricalPartManuals.com

Cutler-Hammer
Westinghouse &
Cutler-Hammer Products
Five Parkway Center
Pittsburgh, Pennsylvania, U.S.A. 15220

January 1995
New Information
Mailed to: E, D, C/29-100A, 31-400A, 31-500A

Type LA Tri-Pac® Circuit Breaker

Westinghouse AB DE-ION® Current Limiting Circuit Breakers

Type LA Tri-Pac Circuit Breaker

Front View

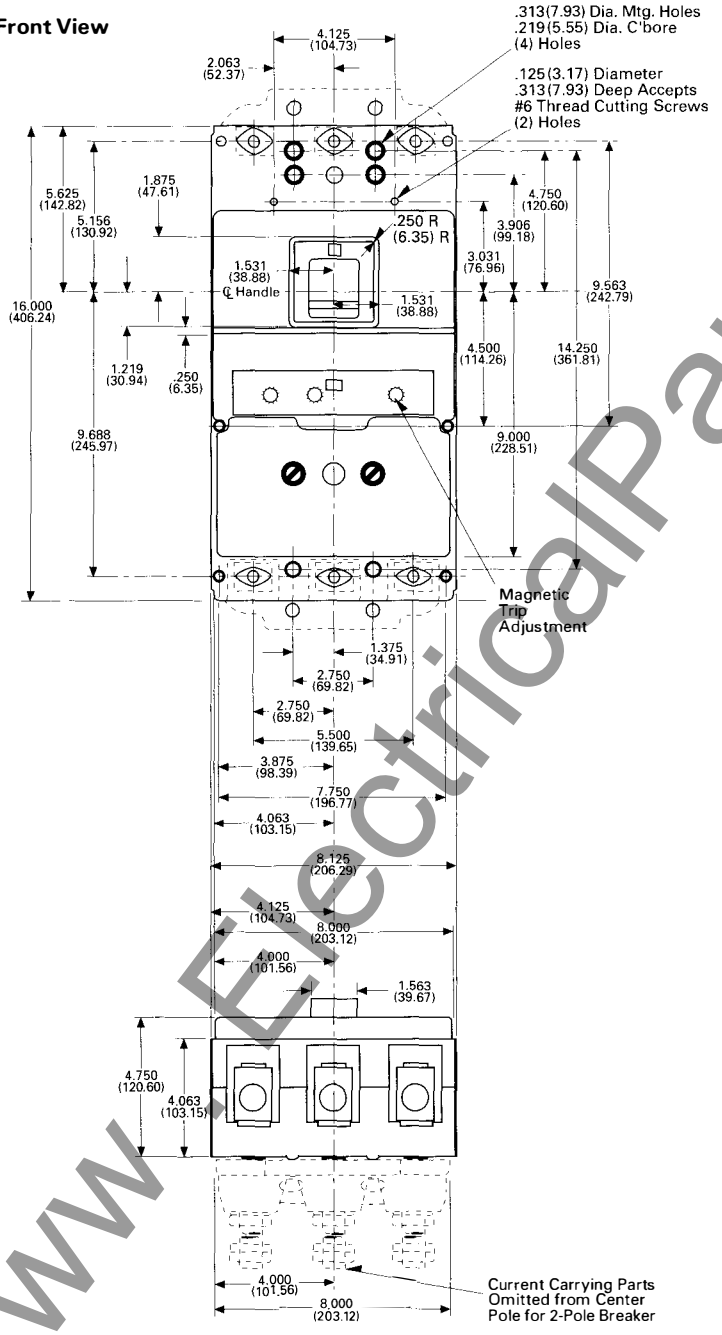

Side View

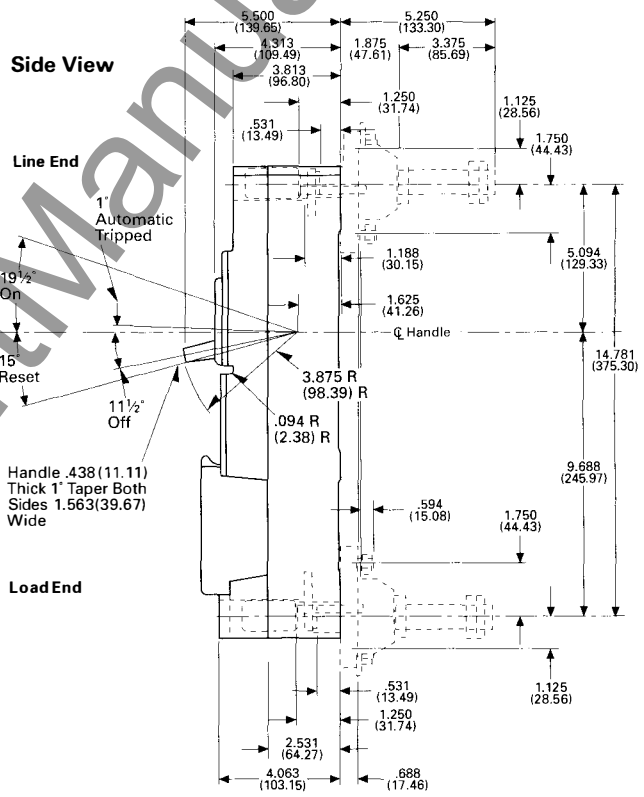

Reproduced from drawing 655D300

Dimensions in parentheses in millimeters

www.ElectricalPartManuals.com

Westinghouse AB DE-ION® Current Limiting Circuit Breakers

Type LA Tri-Pac Circuit Breaker, Drilling Plans

For Mounting Bolts

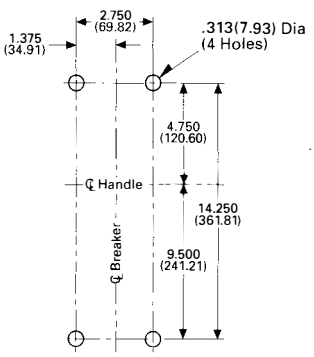

For Rear Connected Studs

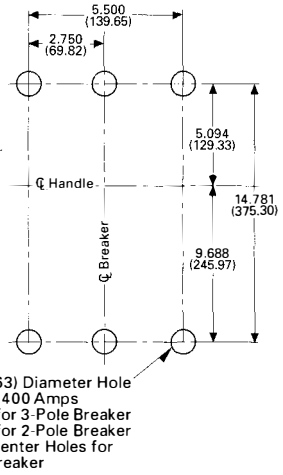

For Plug-In Blocks

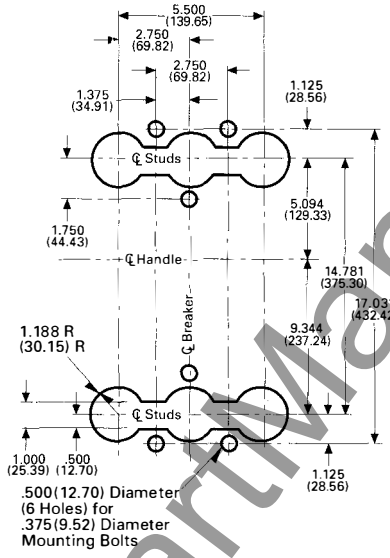

Front Cover Cutout

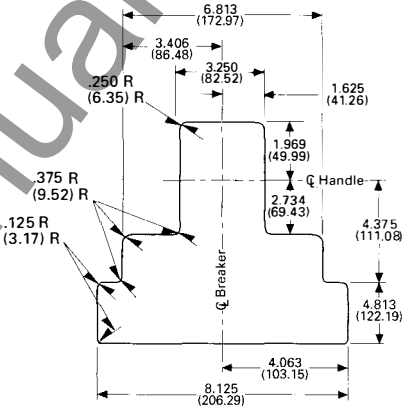

Terminal Arrangements

Cable	Catalog Number	Ampere Rating	Wire Size
For Use With Cu/Al Cable (Must be Specified)			
Single	TA225LA1	125-225	#6-350 MCM Cu or #4-350 MCM Al
Double	TA400LA1	250-400	#4-250 MCM Cu/Al Plus 3/0-600 MCM Cu/Al
For Use With Copper Cable Only (Supplied as Standard)			
Single	TA225LA	70-225	#6-350 MCM
Double	TA400LA	250-400	#4-250 MCM and 3/0-600 MCM

Rear Connected Studs

Stud Ampere Rating	Stud Style Number	Thread Size	Dimension A
125-225	1241345	.500 (12.70) - 13 (330.07)	3.219 (81.72)
125-225	1241392	.500 (12.70) - 13 (330.07)	6.281 (159.48)
125-225	1241346	.500 (12.70) - 13 (330.07)	4.969 (126.16)
250-400	05B7383G15	.750 (19.04) - 16 (406.24)	5.938 (176.14)
250-400	05B7383G16	.750 (19.04) - 16 (406.24)	7.969 (202.33)
250-400	05B7383G17	.750 (19.04) - 16 (406.24)	10.938 (277.70)

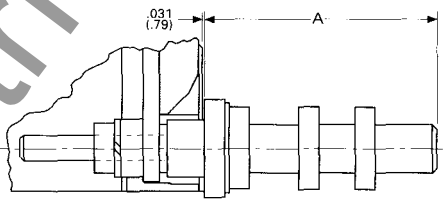

Plug-In Adapter Kit

Poles	Ampere Rating	Kit Style Number	Thread Size
2	125-400	313C644G25	.750 (19.04) - 16 (406.24)
3	125-400	313C644G26	.750 (19.04) - 16 (406.24)

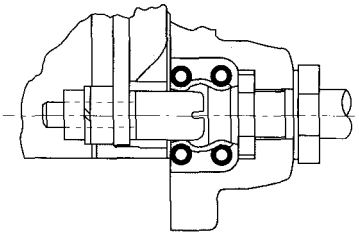

Reproduced from drawing 655D300

Dimensions in parentheses in millimeters

Cutler-Hammer
Westinghouse &
Cutler-Hammer Products
Five Parkway Center
Pittsburgh, Pennsylvania, U.S.A. 15220

Printed in U.S.A.
January 1995

www.ElectricalPartManuals.com

January 1995
New Information
Mailed to: E, D, C/29-100A, 31-400A, 31-500A

Type NB Tri-Pac® Circuit Breaker

Westinghouse AB DE-ION® Current Limiting Circuit Breakers

Type NB Tri-Pac Circuit Breaker

Front View

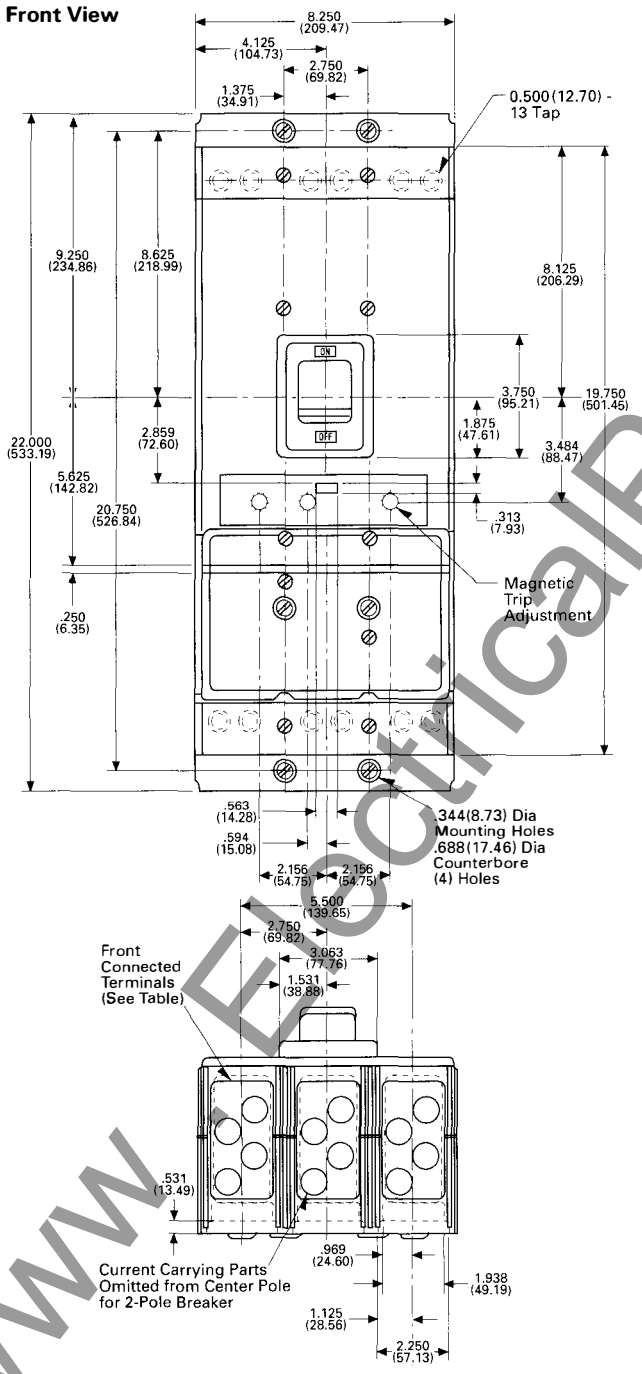

Side View

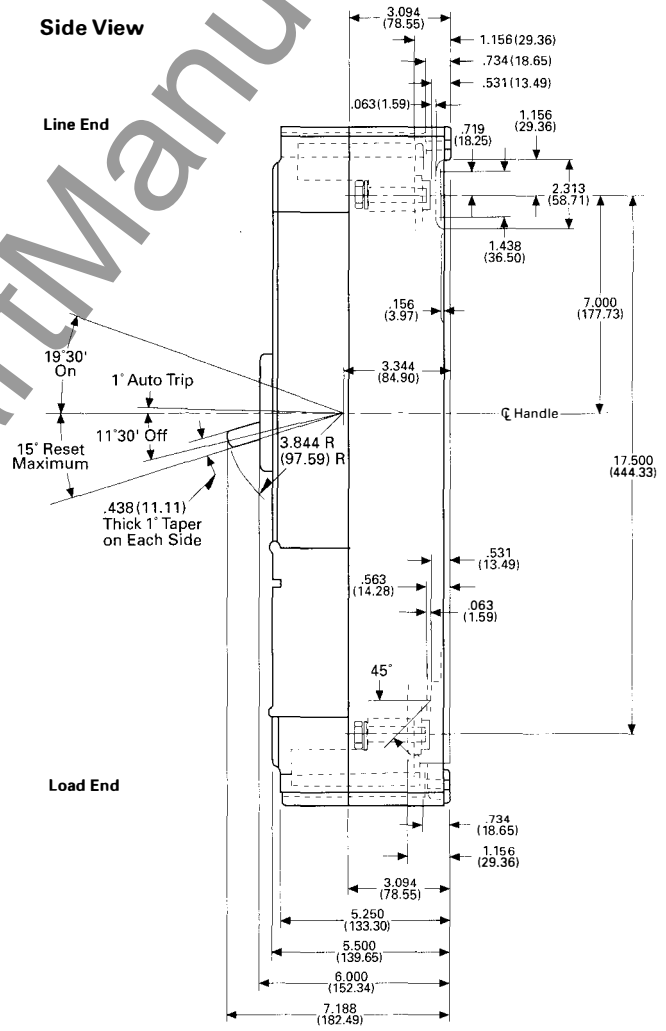

Reproduced from drawing 372D515

Dimensions in parentheses in millimeters

www.ElectricalPartManuals.com

Westinghouse AB DE-ION® Current Limiting Circuit Breakers

Type NB Tri-Pac Circuit Breaker, Drilling Plans

For Mounting Bolts
(Front Connected Terminals)

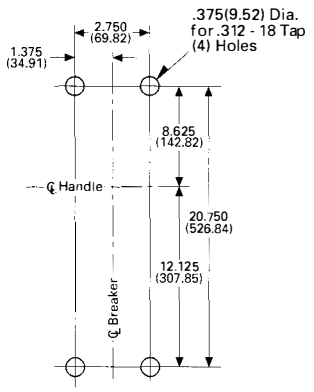

For Rear Connected Studs
(Insulated Panel)

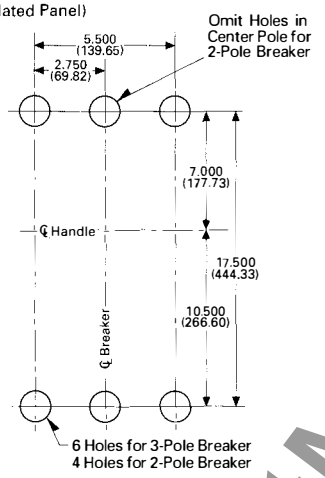

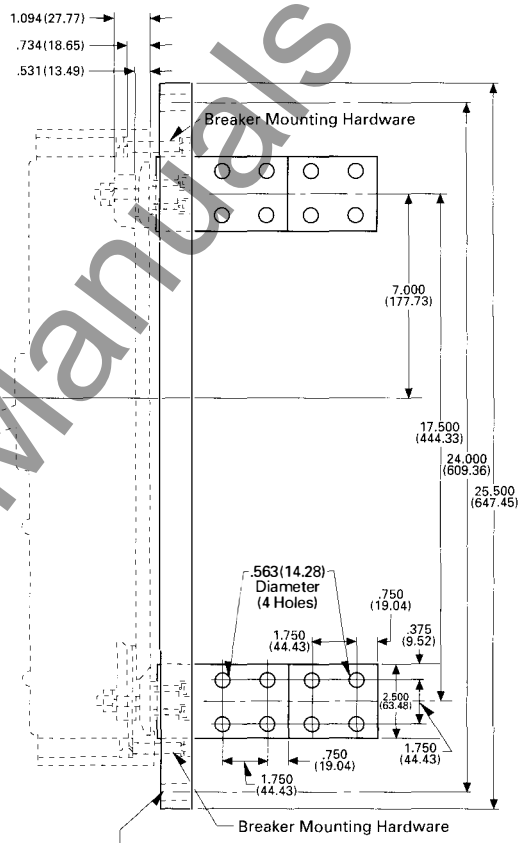

Bolted Rear Connected Studs
For 300-450 Amps

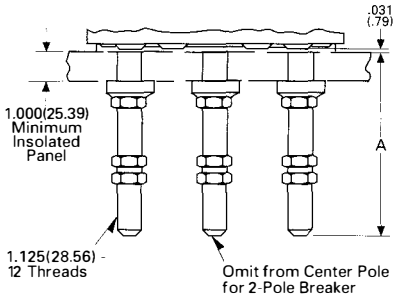

Front Cover Cutout

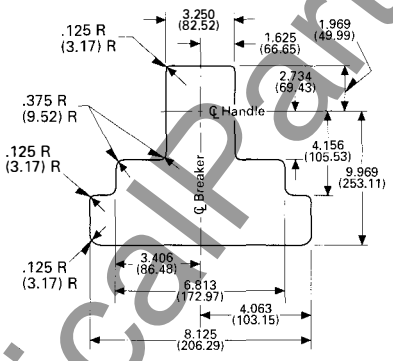

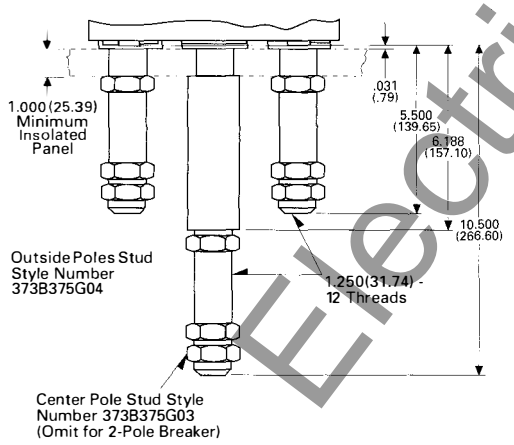

Front Connected Terminals

Catalog Number	Ampere Rating	Wire Size
For Use With Cu/Al Cable (Supplied as Standard)		
TA700 NB 1	300-700	Two #1-500 MCM
TA1000 NB 1	800	Three #3/0-400 MCM
For Use With Copper Cable Only (Optional)		
T350 NB	300-350	Single Cable 1-600 MCM
T700 NB 1	400-700	Double Cable 2/0-500 MCM
T1000 NB 1	800	Triple Cable 3/0-500 MCM

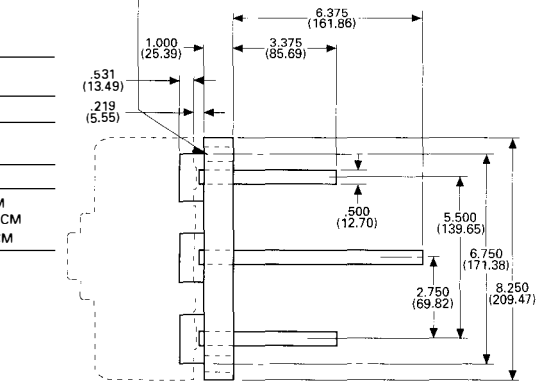

Reproduced from drawing 372D515 **Dimensions in parentheses in millimeters** **Reproduced from drawing 4990D38**

Cutler-Hammer
Westinghouse &
Cutler-Hammer Products
Five Parkway Center
Pittsburgh, Pennsylvania, U.S.A. 15220

www.ElectricalPartManuals.com

January 1995
New Information
Mailed to: E, D, C/29-100A, 31-400A, 31-500A

Type PB Tri-Pac® Breaker

Westinghouse AB DE-ION® Current Limiting Circuit Breakers

Type PB Tri-Pac Breaker

Front View

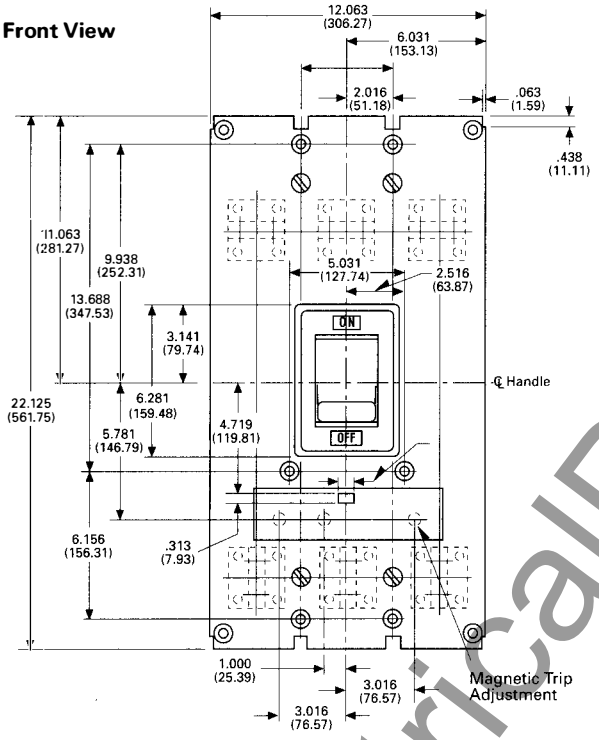

Side View

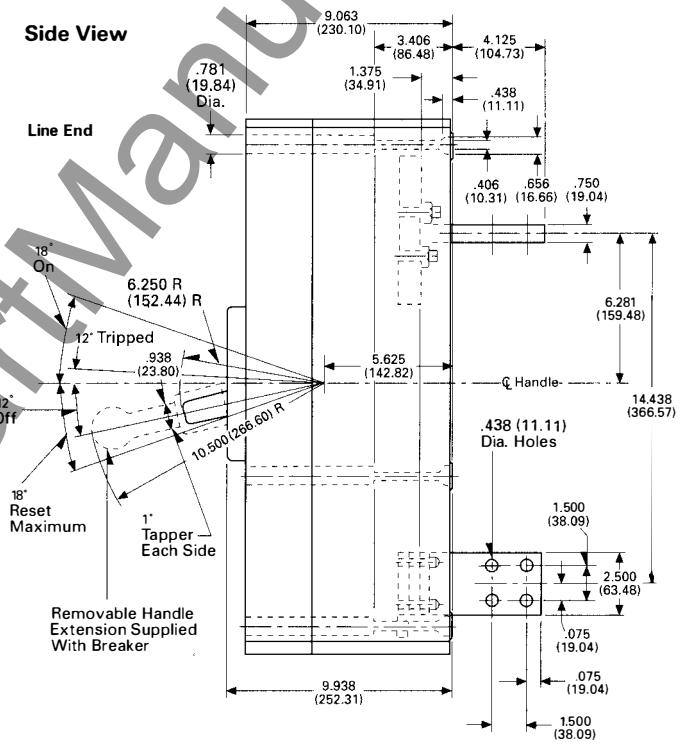

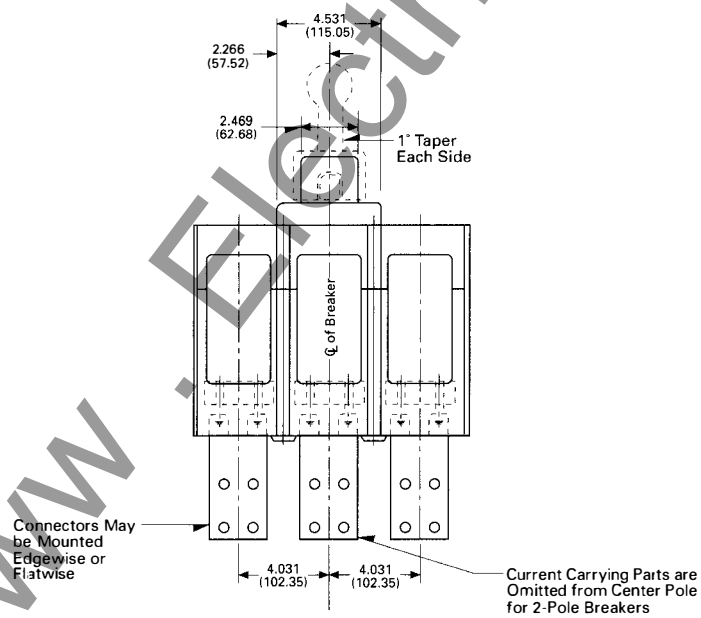

Load End

Reproduced from drawing 654D4460

Dimensions in parentheses in millimeters

www.ElectricalPartManuals.com

Westinghouse AB DE-ION® Current Limiting Circuit Breakers

Type PB Tri-Pac Circuit Breaker, Drilling Plans

For Mounting Bolts

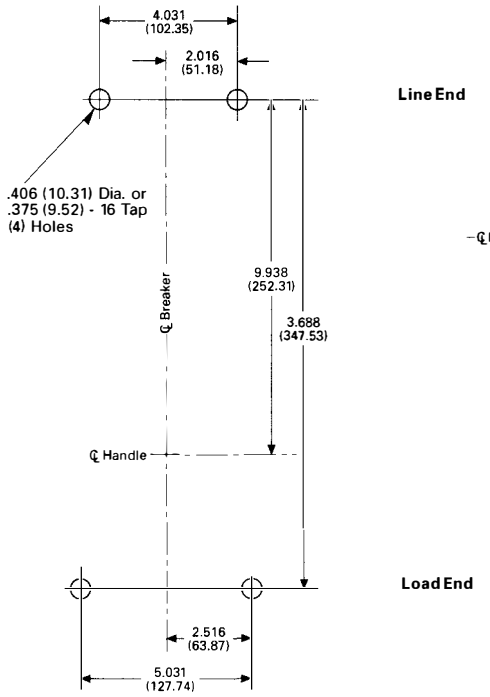

Line End

Load End

Front Cover Cutout

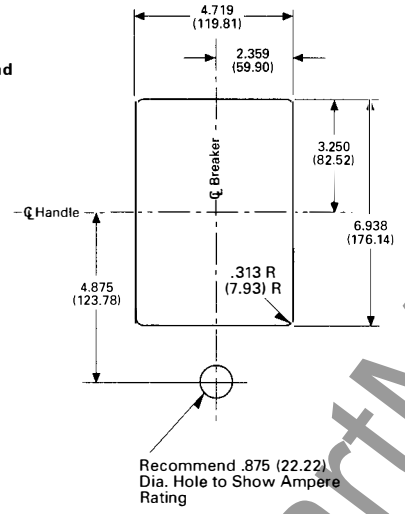

Reproduced from drawing 654D460 **Dimensions in parentheses in millimeters**

Cutler-Hammer
Westinghouse &
Cutler-Hammer Products
Five Parkway Center
Pittsburgh, Pennsylvania, U.S.A. 15220

Printed in U.S.A.
January 1995

www.ElectricalPartManuals.com

Cutler-Hammer

July 1996
New Information
Mailed to: E, D, C/29-100A

Series C® HMCP Motor Circuit Protectors 3-600 Amperes

F-Frame

Front View

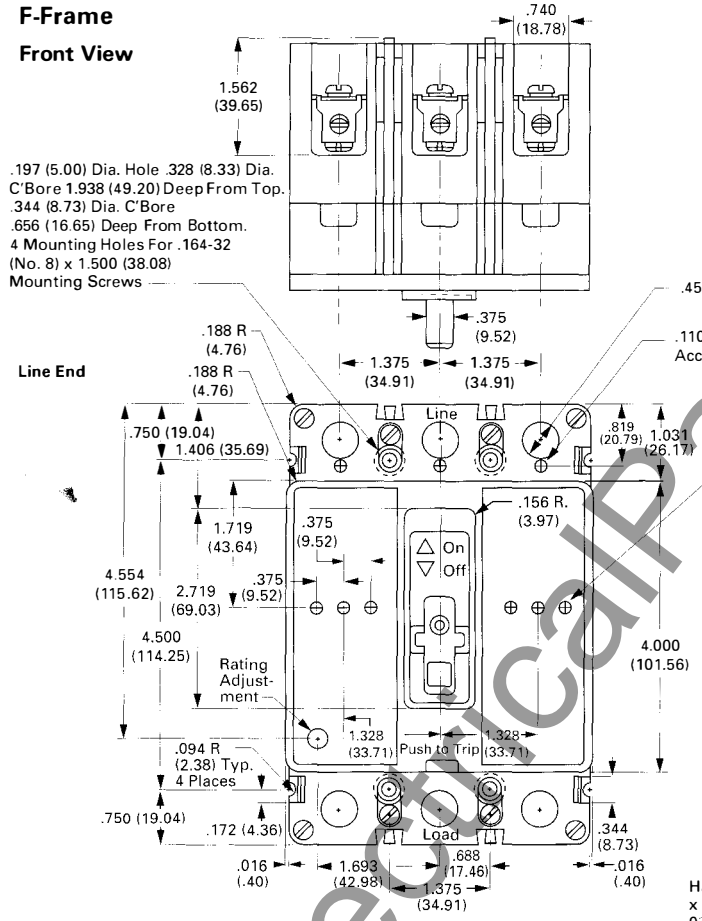

Side View

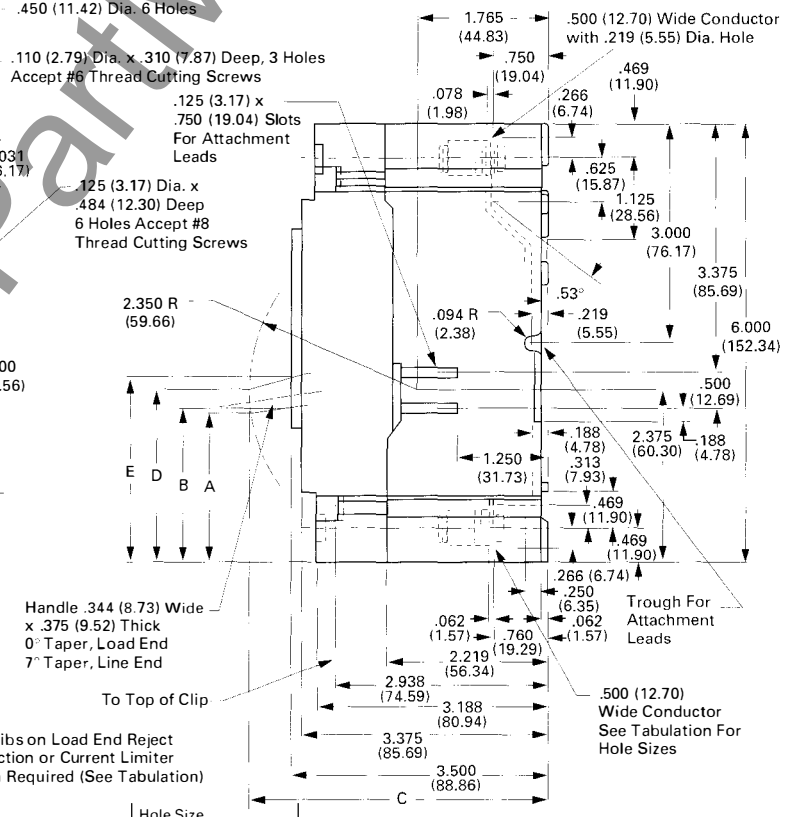

MCP Continuous Rating	Hole Size .203 (5.15)	.234 (5.94)	.266 (6.75)	Current Limiter Pockets
3	X			N
5	X			N
7	X			N
10	X			Y
15	X			Y
25		X		N
30		X		N
50		X		Y
70		X		Y
100			X	N
150			X	Y

Breaker Status	Dimension A	B	C	D	E
On	3.07 (77.94)	2.92 (74.13)	3.96 (100.54)	3.40 (86.32)	3.33 (84.54)
Tripped	2.65 (67.28)	2.57 (65.25)	4.06 (103.08)	2.99 (75.91)	2.98 (75.66)
Off	2.08 (52.81)	2.14 (54.33)	4.12 (104.60)	2.42 (61.44)	2.56 (64.99)
Reset	1.98 (50.27)	2.05 (52.04)	4.11 (104.35)	2.30 (58.39)	2.48 (62.96)

Note: For 2 Pole MCP, Current Carrying Parts Omitted From Center Pole

Reproduced from drawing 1490D54

Dimensions in parentheses in millimeters

EATON

www.ElectricalPartManuals.com

Series C HMCP Motor Circuit Protectors, 3-600 Amperes

F-Frame

Front Cover Cutout

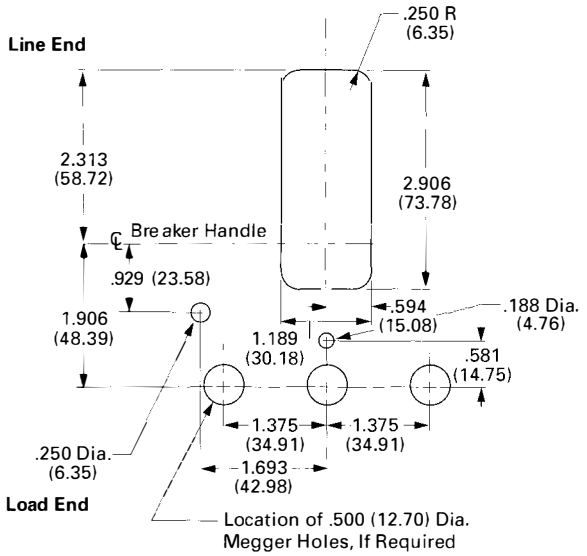

Drilling Plans

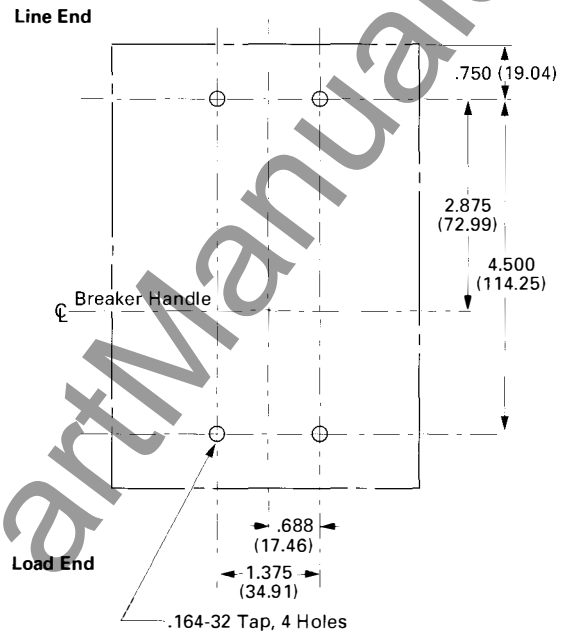

Reproduced from drawing 1490D54 **Dimensions in parentheses in millimeters**

Cutler-Hammer
Westinghouse & Cutler-Hammer Products
Five Parkway Center
Pittsburgh, Pennsylvania, U.S.A. 15220

Printed in U.S.A.
July 1996

www.ElectricalPartManuals.com

July 1996
New Information
Mailed to: E, D, C/29-100A

Series C® HMCP Motor Circuit Protectors 3-600 Amperes

J-Frame

Front View

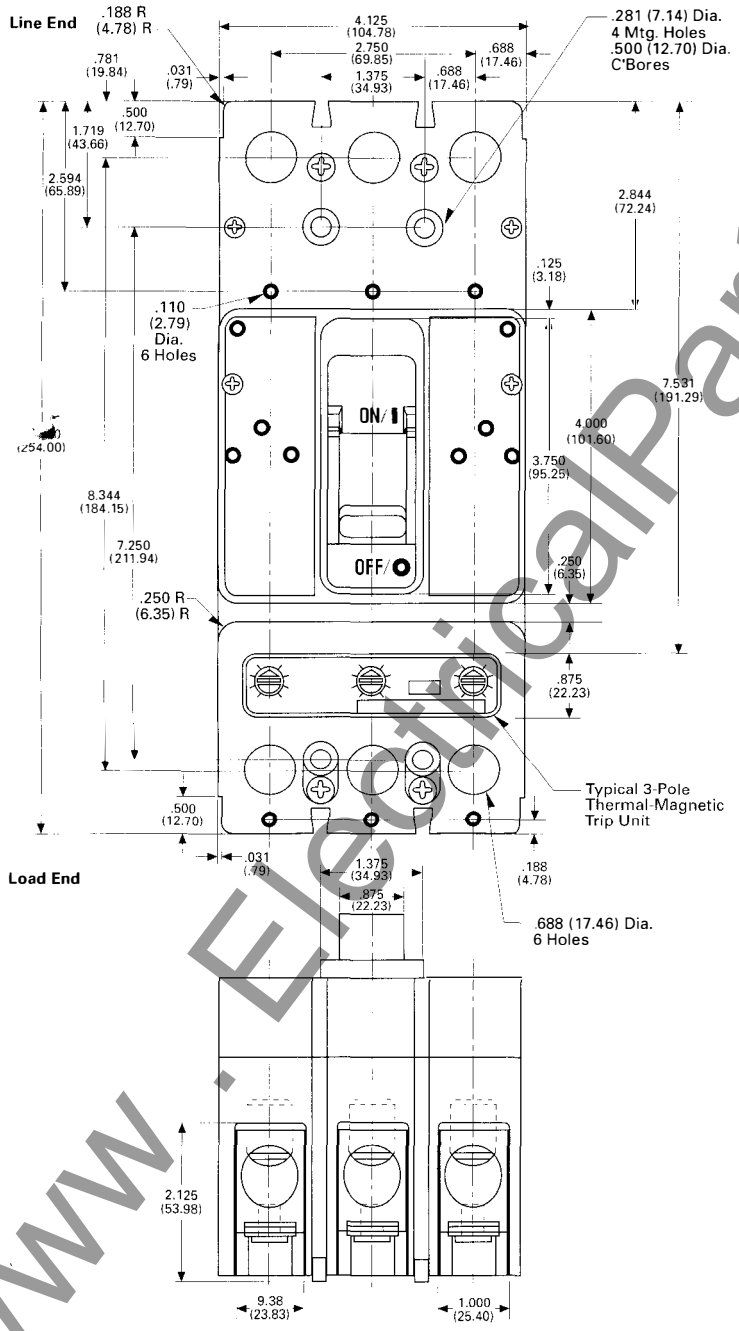

Side View

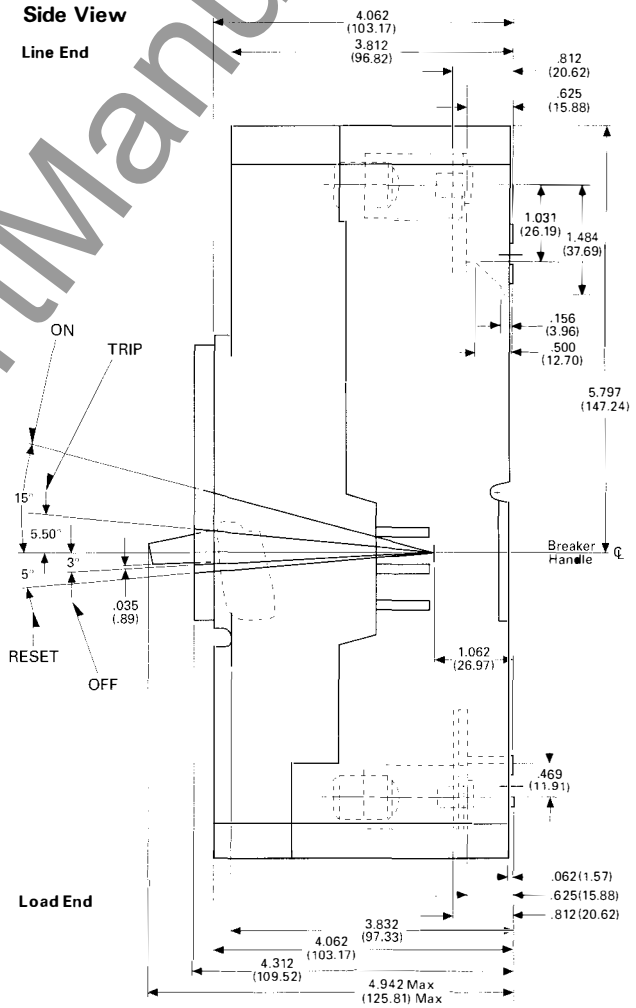

Reproduced from drawings 1491D63 and 1491D67

Dimensions in parentheses in millimeters

www.ElectricalPartManuals.com

Series C HMCP Motor Circuit Protectors, 3-600 Amperes

J-Frame

Drilling Plans

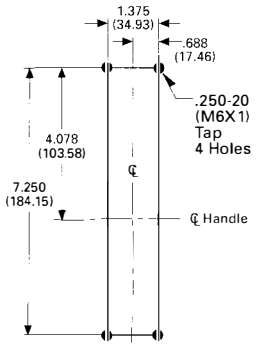

Breaker Mounting

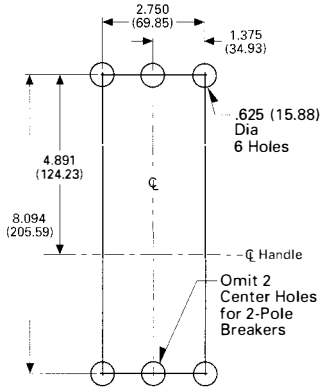

Rear Connecting Studs

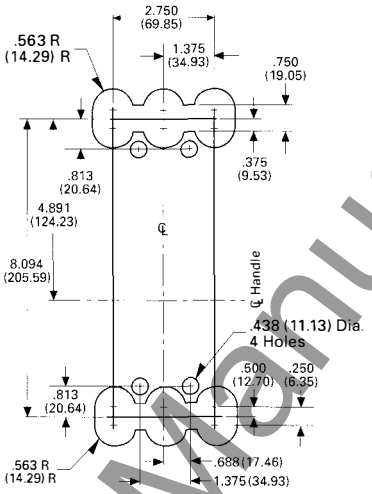

Drawout Support Blocks

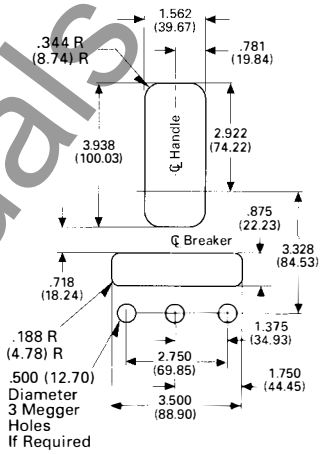

Front Cover Cutout

Breaker Shown in OFF Position

Line End

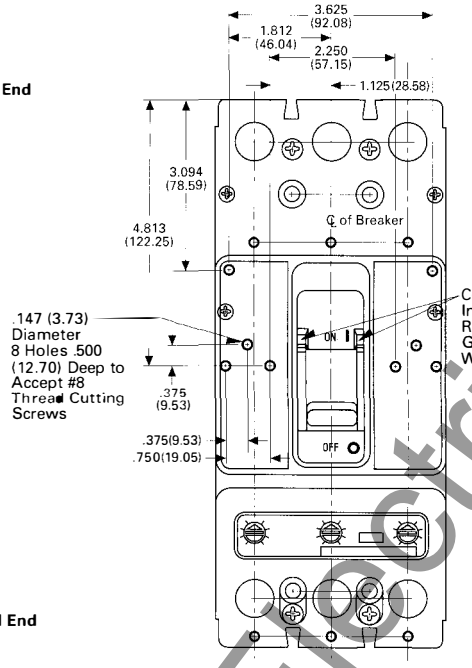

Load End

Line End

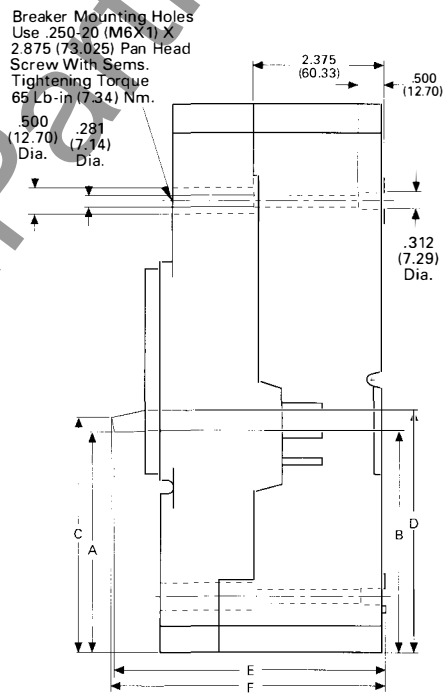

Load End

Reproduced from drawings 1491D65 and 1491D67

Breaker Status	Dimension A	B	C	D	E	F	Hdl. Oper. Force
On	5.24 (132.10)	5.12 (130.05)	5.54 (140.72)	5.49 (139.45)	4.77 (121.56)	4.72 (119.89)	32 Lb. (142.3 Nm)
Tripped	4.79 (121.67)	4.71 (119.63)	5.10 (129.54)	5.10 (129.54)	4.87 (123.70)	4.85 (123.19)	
Off	4.02 (102.11)	4.06 (103.12)	4.33 (109.82)	4.45 (113.03)	4.91 (124.71)	4.95 (125.73)	22 Lb. (97.9 Nm)
Reset	3.91 (99.31)	3.96 (100.58)	4.21 (106.93)	4.36 (110.74)	4.90 (124.46)	4.95 (125.73)	38 Lb. (169.0 Nm)

Dimensions in parentheses in millimeters

Cutler-Hammer
Westinghouse & Cutler-Hammer Products
Five Parkway Center
Pittsburgh, Pennsylvania, U.S.A. 15220

Printed in U.S.A.
July 1996

www.ElectricalPartManuals.com

July 1996
New Information
Mailed to: E, D, C/29-100A

Series C® HMCP Motor Circuit Protectors 3-600 Amperes

K-Frame

Front View

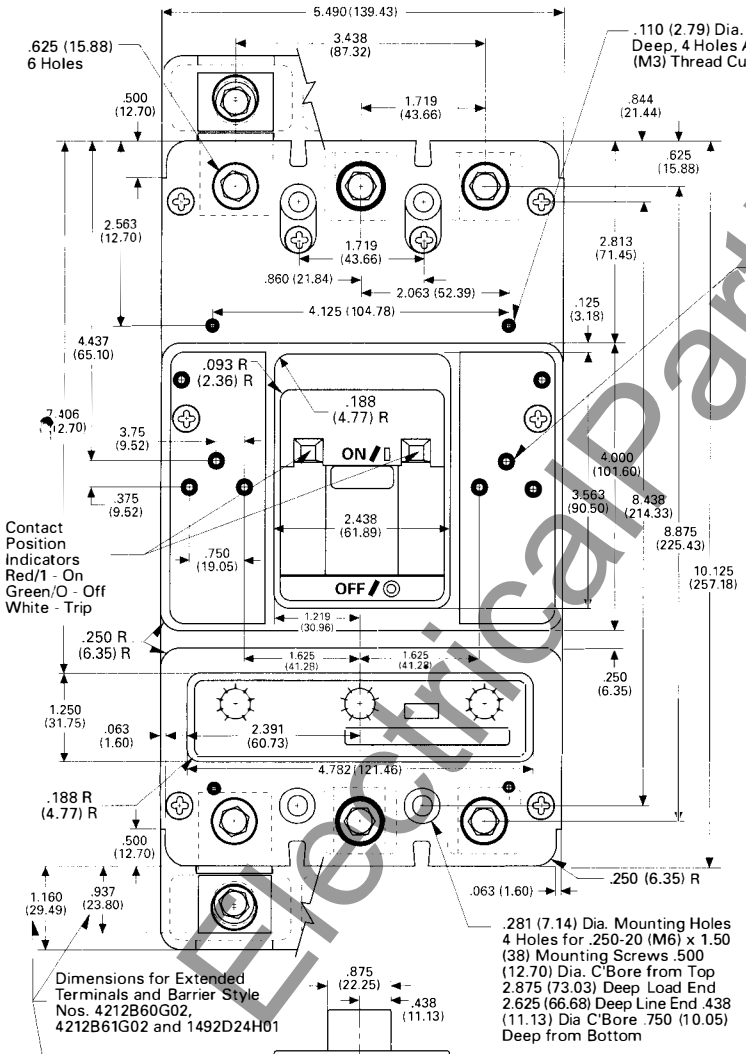

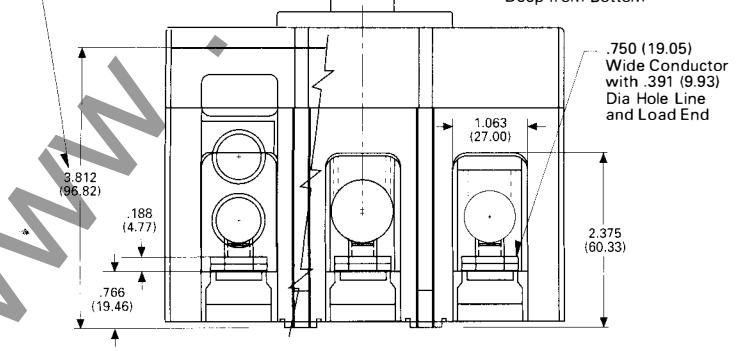

Side View

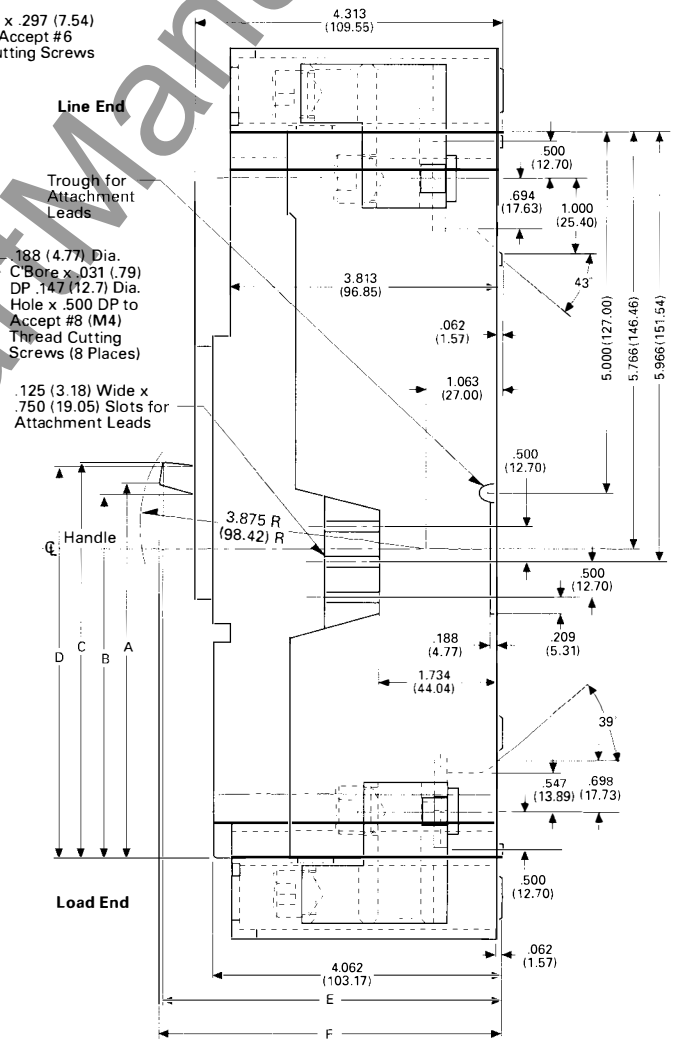

Breaker Status	Dimensions A	B	C	D	E	F	Handle Force[1]
On	5.39 (136.9)	5.20 (132.1)	5.69 (144.5)	5.61 (142.5)	4.72 (119.9)	4.77 (121.2)	30 lbs. (13.61 kgs.)
Tripped	4.77 (121.2)	4.69 (119.1)	5.08 (129.0)	5.11 (129.8)	4.89 (124.2)	4.89 (124.2)	—
Off	4.16 (105.7)	4.21 (106.9)	4.46 (113.3)	4.64 (117.9)	4.95 (125.7)	4.91 (124.7)	25 lbs. (11.34 kgs.)
Reset	4.07 (103.4)	4.14 (105.2)	4.57 (116.1)	4.56 (115.8)	4.95 (125.7)	4.90 (124.5)	35 lbs. (15.87 kgs.)

[1] All handle forces measured approximately 0.125 (3.17) from top of handle.

Reproduced from drawings 1492D63 and 1492D67
Dimensions in parentheses in millimeters

www.ElectricalPartManuals.com

Series C HMCP Motor Circuit Protectors, 3-600 Amperes

K-Frame
Drilling Plans

Rear Connected Studs

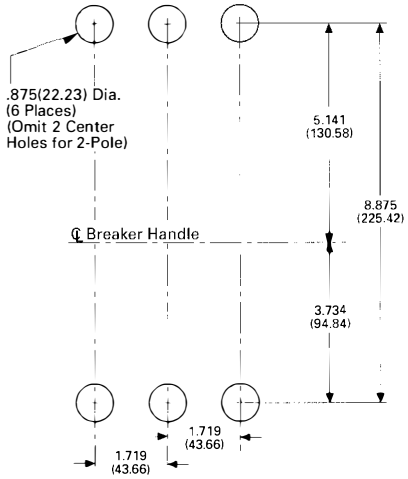

Front Connected Terminals

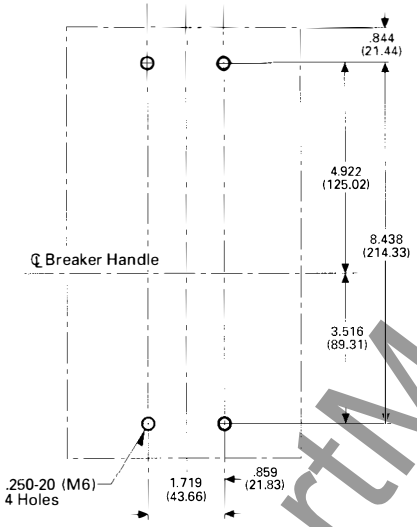

Front Cover Cutout

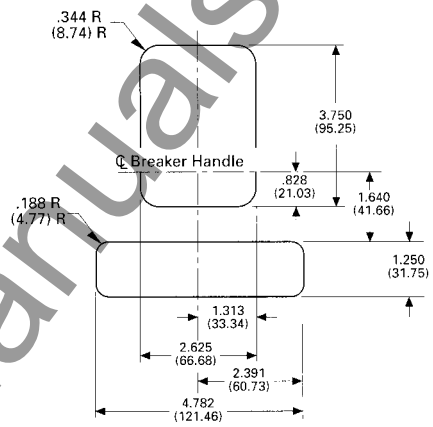

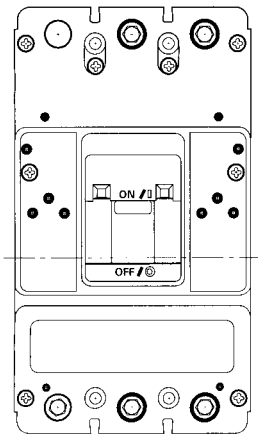

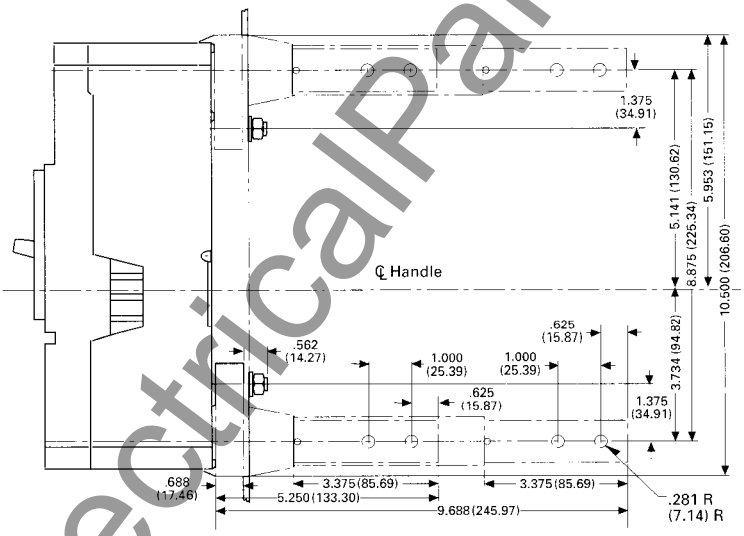

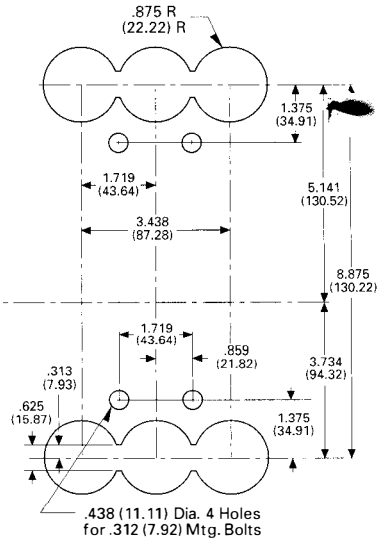

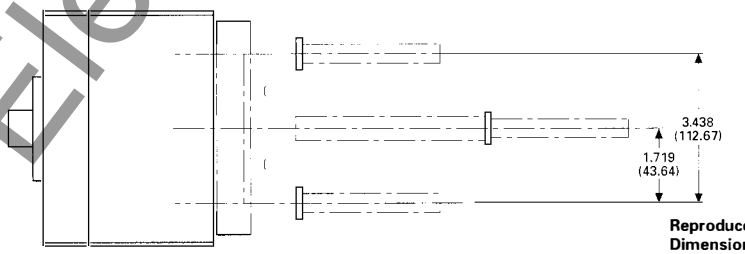

Reproduced from drawings 1492D63 and 1492D67
Dimensions in parentheses in millimeters

Cutler-Hammer
Westinghouse & Cutler-Hammer Products
Five Parkway Center
Pittsburgh, Pennsylvania, U.S.A. 15220

Printed in U.S.A.
July 1996

www . ElectricalPartManuals . com

July 1996
New Information
Mailed to: E, D, C/29-100A

Series C® HMCP Motor Circuit Protectors 3-600 Amperes

L-Frame

Front View

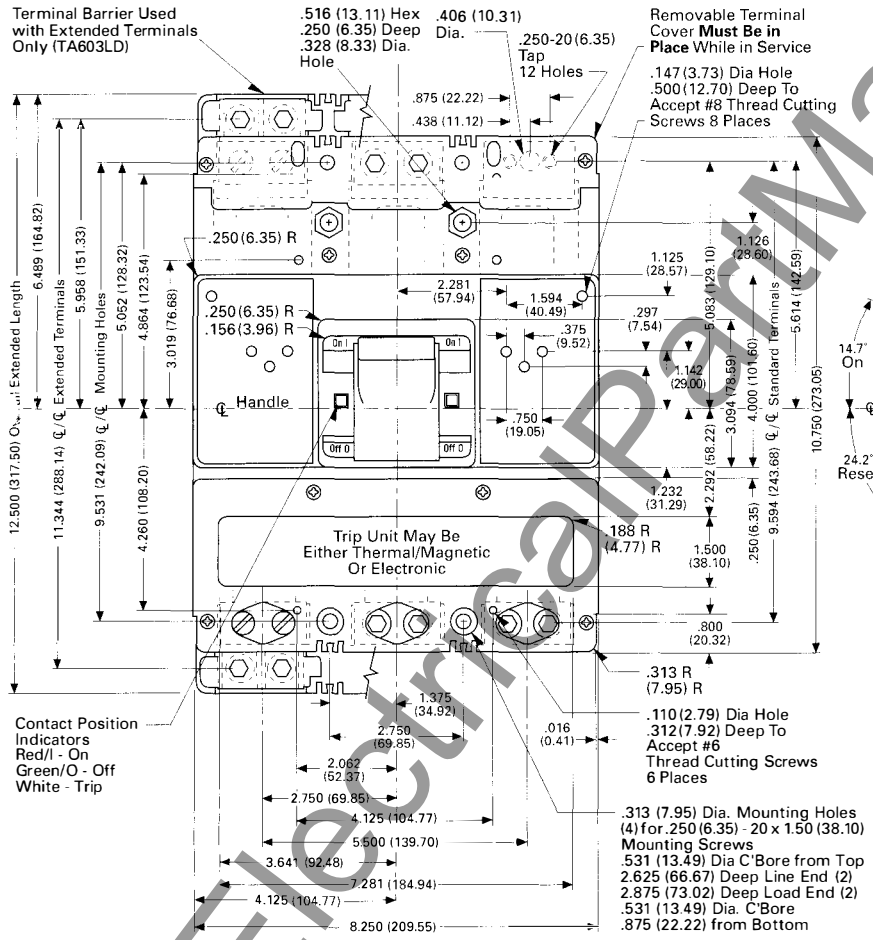

Side View

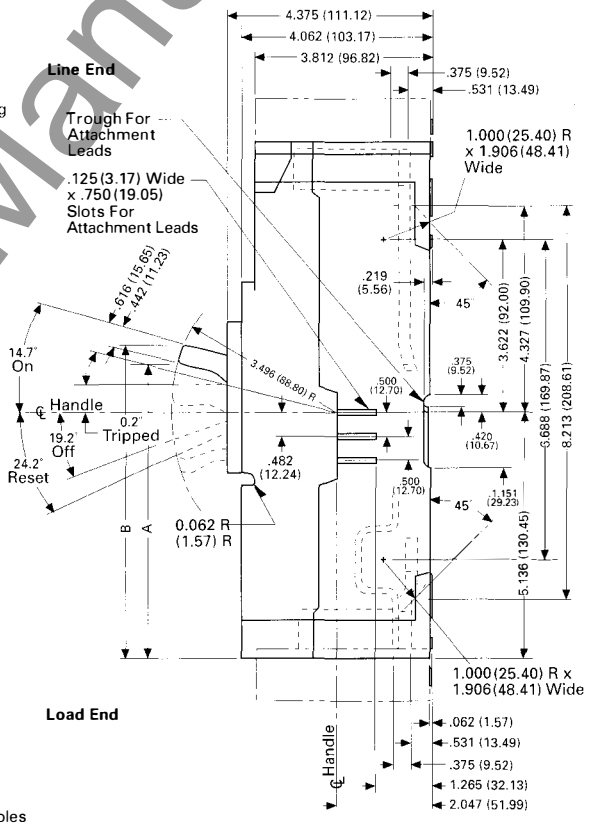

Handle Forces (From End of Handle)①

On	45 lbs.
Off	50 lbs.
Reset	60 lbs.

① Measurements taken approximately 3/16 in. from end of handle.

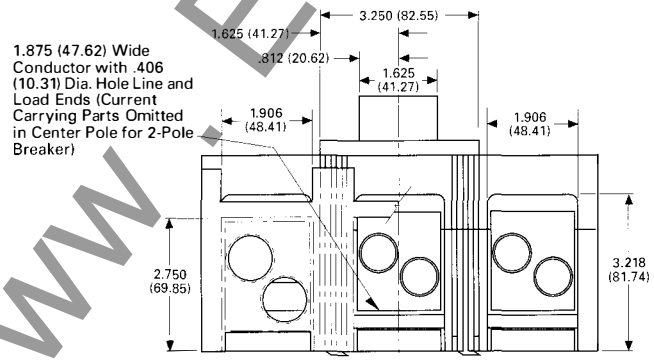

Reproduced from drawings 1493D63 and 1493D67

Dimensions in parentheses in millimeters

www.ElectricalPartManuals.com

Series C HMCP Motor Circuit Protectors, 3-600 Amperes

L-Frame Drilling Plans

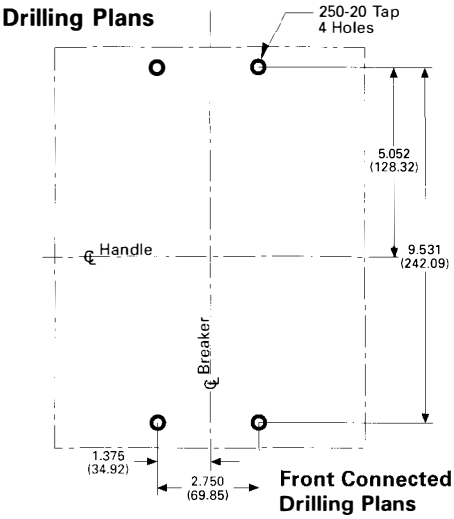

Front Connected Drilling Plans

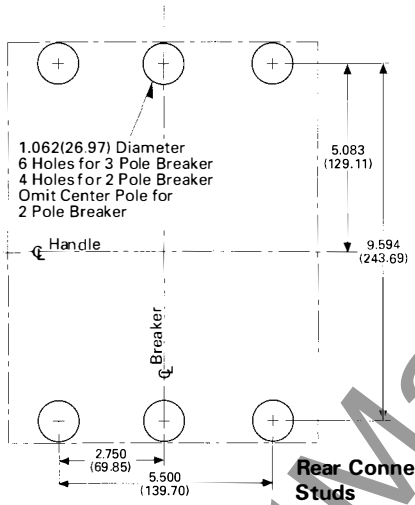

Rear Connected Studs

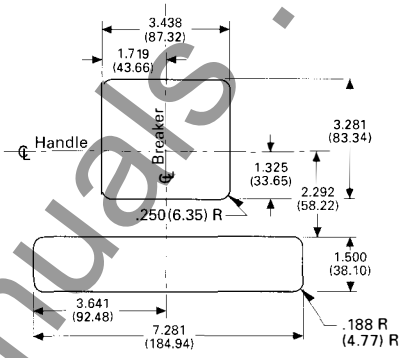

Front Cover Cutout

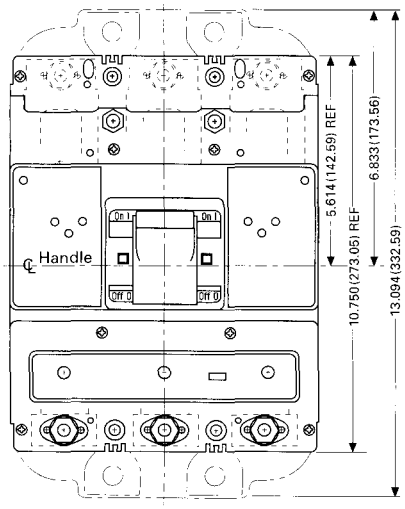

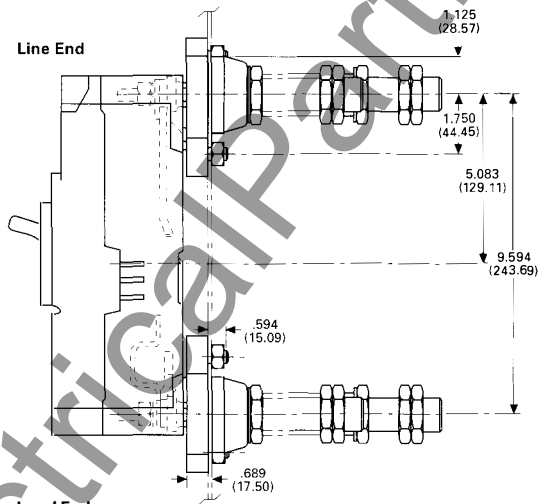

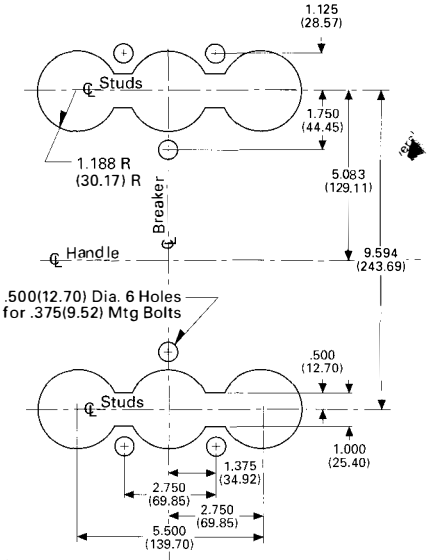

Plug-In Block Mounting Panel

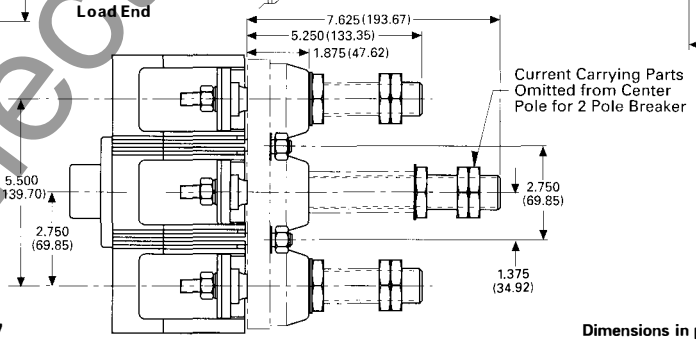

Reproduced from drawings 1493D63 and 1493D67

Dimensions in parentheses in millimeters

Cutler-Hammer
Westinghouse & Cutler-Hammer Products
Five Parkway Center
Pittsburgh, Pennsylvania, U.S.A. 15220

Printed in U.S.A.
July 1996

www.ElectricalPartManuals.com

Westinghouse Electric Corporation
Low Voltage Breaker Division
Beaver, Pennsylvania 15009

October, 1977
Supersedes Dimension Sheet 29-170
all previous issues.
Mailed to: E, D, C/1901, 1928, 1929/PL

Outline Dimensions and Drilling Plans
for Standard, MARK 75® and TRI-PAC®
Molded Case Circuit Breakers

AB DE-ION® Circuit Breakers

Index

Type Breaker — Page

Standard Breakers
100 Amperes
Quicklag® Ground Fault, Types QPGF, QBGF 1 Pole . . . 3
Quicklag Ground Fault, Type QPGF, 2 Poles . . . 5
Quicklag Ground Fault, Type QBGF, 2 Poles . . . 6
Quicklag Types QPH, QHP, QNPL, 1 Pole . . . 7
Quicklag Types QPH, QHP, QNPL, HQNP, 2, 3 Poles . . . 8
Quicklag Types HQP, QPH, 1 Pole . . . 9
Quicklag Type HQP, 2 Poles . . . 10
Quicklag Type QBH and Types BA, HBA 277 Volts, 1 Pole . . . 11
Quicklag Type QBH and Types BA, HBA, 2, 3 Poles . . . 12
Quicklag Type QBH and Type BAB, 1 Pole . . . 13
Quicklag Type BAB, 2 Poles . . . 14
Quicklag Types QCL, QHCL, QCH, 1 Pole . . . 15
Quicklag Types QCH, QHCL, HQC, QCL, QHC 2, 3 Poles . . . 16
Quicklag Type QC 1 Pole . . . 17
Quicklag Type QC 2 Pole . . . 18
Types EB, EHB . . . 19

150 Amperes
Type FB . . . 19
LFB Current Limiter for Type FB . . . 21
Type LC SELTRONIC™ Breaker . . . 29

225 Ampere
Types CA, CAH . . . 23
Types JA, KA . . . 24

250 Amperes
Types JB, KB . . . 25

300 Amperes
Type LC SELTRONIC Breaker . . . 29

400 Amperes
Type DA . . . 26
Types LAB, LA . . . 27
Types LB, LBB . . . 28

600 Amperes
Type LC SELTRONIC Breaker . . . 30
Type LA . . . 31

800 Amperes
Type MA . . . 32
Type MC, MCG SELTRONIC Breakers 33

1200 Amperes
Type NC, NCG SELTRONIC Breakers . 34
Type NB . . . 35
Mounting Block for Types NB, HNB, NC, HNC . . . 36

2000 Amperes
Type PB Rear Connected . . . 37
Type PBF Front Connected . . . 38
Fuse Mounting Base for Types PB, PBF . . . 39
Types PC, PCC Rear Connected SELTRONIC Breakers . . . 41
Types PCF, PCCF, PCFG, PCCFG Front Connected SELTRONIC Breakers . . . 43

2500 Amperes
Type PB Rear Connected . . . 40
Type PC, PCC Rear Connected SELTRONIC Breakers . . . 41
Types PCF, PCCF, PCFG, PCCFG Front Connected SELTRONIC Breakers . . . 43

3000 Amperes
Type PB Rear Connected . . . 40
Types PC, PCC Rear Connected SELTRONIC Breakers . . . 42

SELTRONIC Circuit Breaker Accessories
Ground Fault Indicator Kit . . . 44
External (Fourth) Current Monitor Used With SELTRONIC Breakers With Built-in Ground Fault Protection . . . 45

High Interrupting Capacity Breakers
MARK 75® Circuit Breakers
100 Amperes
Type QHP 1 Pole . . . 7
Type QHP 2, 3 Poles . . . 8
Type HBA 1 Pole . . . 11
Type HBA 2, 3 Poles . . . 12
Type QHCL 1 Pole . . . 15
Types QHCL, QHC 2, 3 Poles . . . 16

150 Amperes
Type HFB . . . 19
Type HLC SELTRONIC Breaker . . . 29

225 Amperes
Type HKA . . . 24
Type HKB . . . 25

300 Amperes
Type HLC SELTRONIC Breaker . . . 29

400 Amperes
Type HLA . . . 27
Type HLB . . . 28

600 Amperes
Type HLC SELTRONIC Breaker . . . 30

800 Amperes
Type HMA . . . 32
Types HMC, HMCG SELTRONIC Breakers . . . 33

1200 Amperes
Type HNB . . . 35
Types HNC, HNCG SELTRONIC Breakers . . . 34

TRI-PAC® Circuit Breakers
100 Ampere Type FB . . . 47
400 Ampere Type LA . . . 48
800 Ampere Type NB . . . 49
1600 Ampere Type PB . . . 51
Mounting Block for NB TRI-PAC . . . 50

Motor Operators
For EB, EHB, FB, HFB, DA, JA, KA, HKA Breakers . . . 52
For JB, KB, HKB Breakers . . . 53
For LAB, LA, HLA, LC, HLC Breakers . 54
For MA, HMA, MC, HMC Breakers . . . 55
For NB, HNB, NC, HNC Breakers . . . 56
For PB, PC, PCC and PB TRI-PAC Breakers . . . 57
For LA TRI-PAC Breakers . . . 58
For NB TRI-PAC Breakers . . . 59

Drawout Frames
For LA600, HLA, LC600, HLC600 Breakers . . . 60
For MA, HMA, MC, HMC, MCG, HMCG Breakers . . . 61
For NB, HNB, NC HNC, NCG, HNCG Breakers . . . 62
For PCC, PCCG 2000, 2500, 3000 Ampere Breakers . . . 63
For NB TRI-PAC Breakers . . . 64

www.ElectricalPartManuals.com

www . ElectricalPartManuals . com

Printed in U.S.A.

Westinghouse Electric Corporation
Low Voltage Breaker Division
Beaver, Pennsylvania 15009

October, 1977
Supersedes Dimension Sheet 29-170
all previous issues.
Mailed to: E, D, C/1901, 1928, 1929/PL

Quicklag® Ground Fault Circuit Breakers

Types P and B Single Pole

AB DE-ION® Circuit Breakers

Type P Plug-in, Single Pole Only

Terminals, Load Side Only

Type Terminal	Breaker Amperes	Wire Type and Size
Pressure	15-25	#14-#10 Cu. #12-#8 AL
Pressure	30	#14-# 4 Cu. # 8-#4 AL

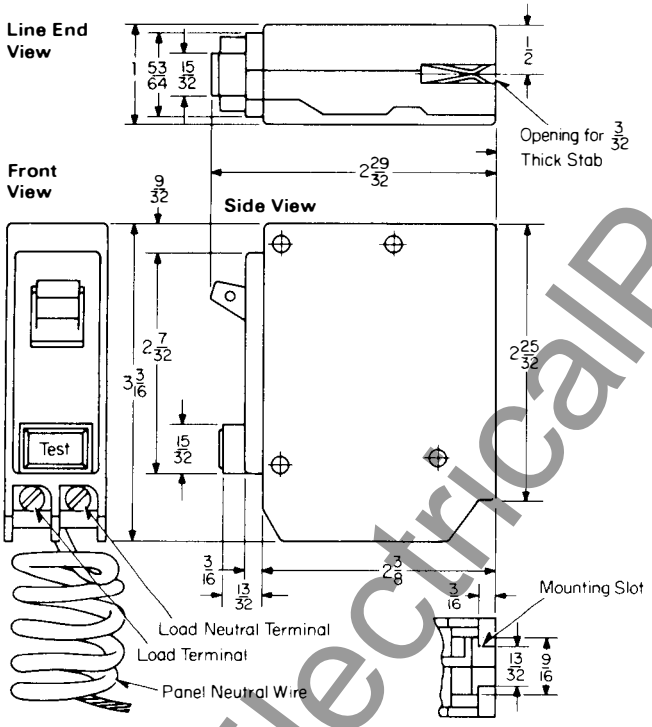

Type B Bolt-on, Single Pole Only

Terminals, Load Side Only

Type Terminal	Breaker Amps	Wire Type and Size
Pressure	15-25	#14-#10 Cu. #12-#8 AL
Pressure	30	#14-# 4 Cu. # 8-#4 AL

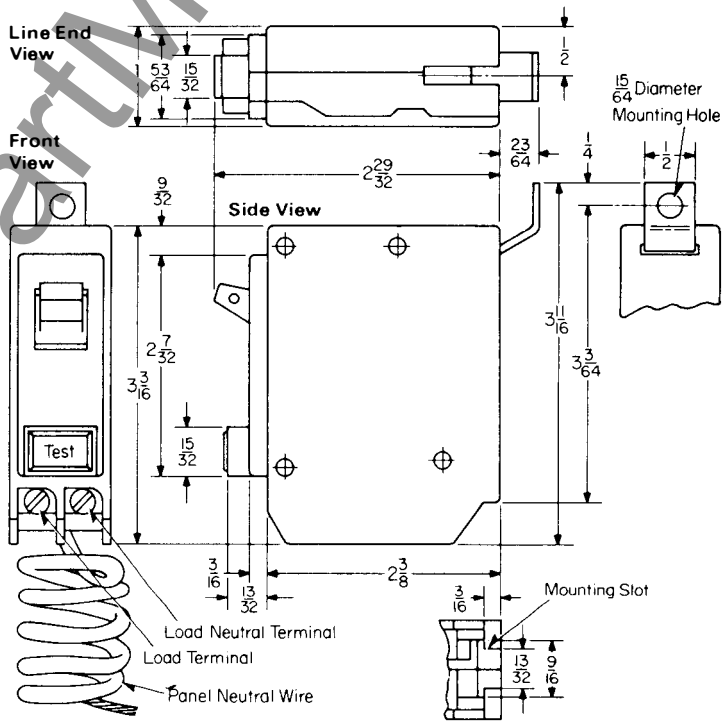

www . ElectricalPartManuals . com

www . ElectricalPartManuals . com

Printed in U.S.A.

Westinghouse Electric Corporation
Low Voltage Breaker Division
Beaver, Pennsylvania 15009

October, 1977
Supersedes Dimension Sheet 29-170
all previous issues.
Mailed to: E, D, C/1901, 1928, 1929/PL

Quicklag® Ground Fault Circuit Breakers

Page 5: Type P Plug-in, Two Pole
Page 6: Type B Plug-in, Two Pole

AB DE-ION® Circuit Breakers

Type P Plug-in, Two Pole Only

Terminals, Load Side Only

Type Terminal	Breaker Amperes	Wire Type and Size
Pressure	15-25	#14-#10 Cu, #12-#8 AL
Pressure	30	#14-# 4 Cu, # 8-#4 AL

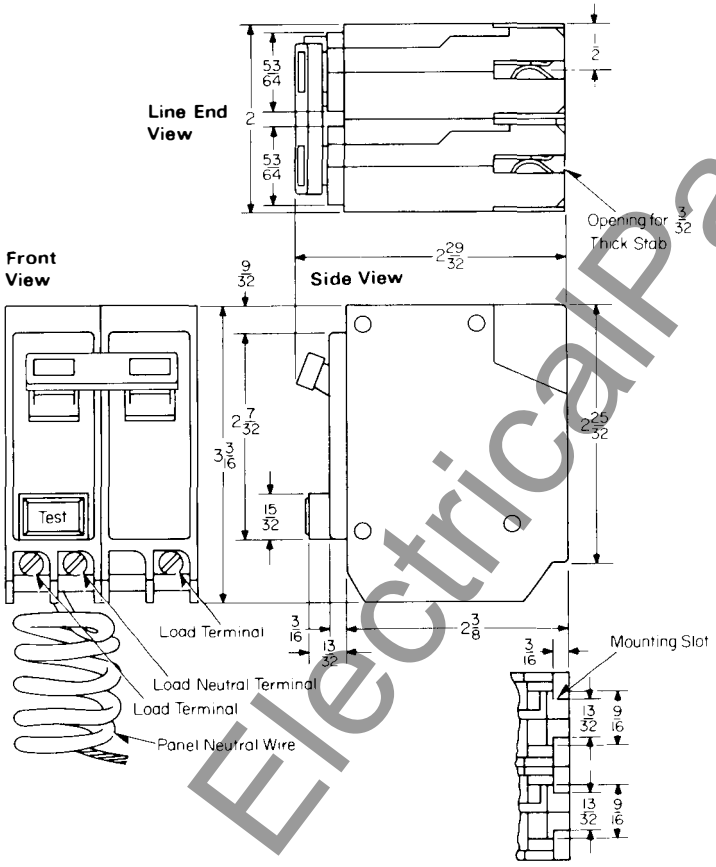

www . ElectricalPartManuals . com

Type B Bolt-on, Two Pole Only

Terminals, Load Side Only

Type Terminal	Breaker Amps	Wire Type and Size
Pressure	15-25	#14-#10 Cu, #12-#8 AL
Pressure	30	#14-# 4 Cu, # 8-#4 AL

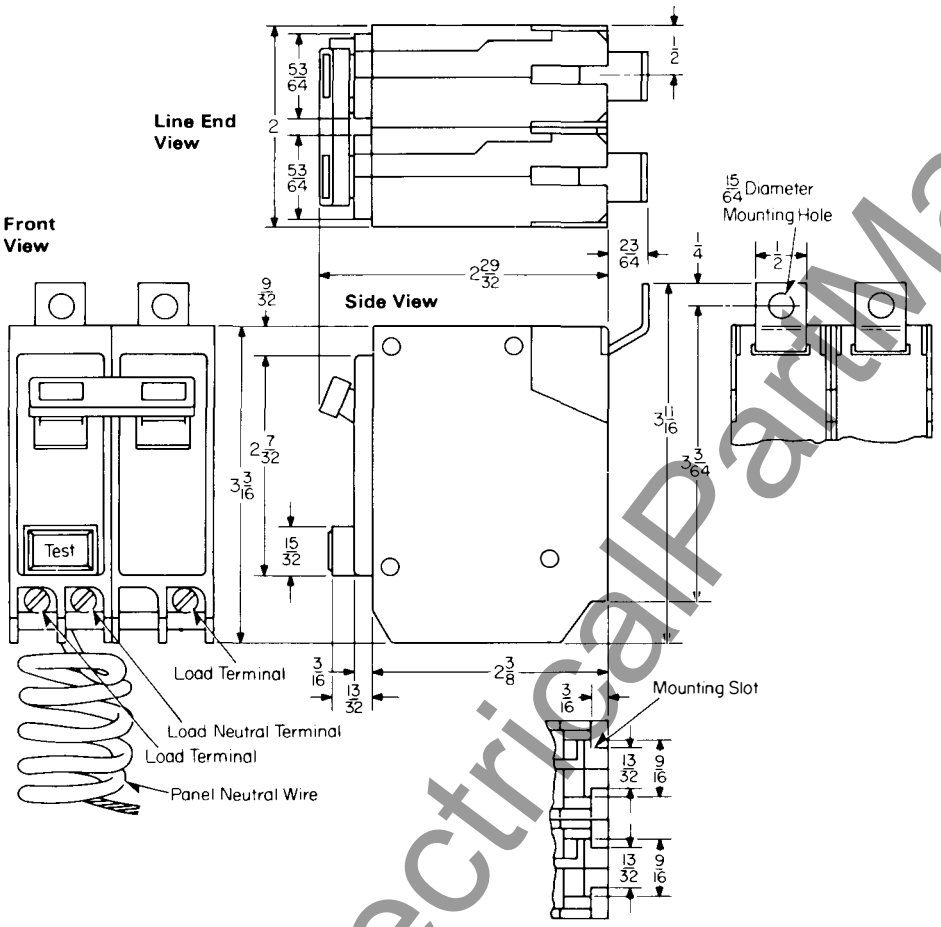

Westinghouse Electric Corporation
Low Voltage Breaker Division
Beaver, Pennsylvania 15009

Printed in U.S.A.

www . ElectricalPartManuals . com

October, 1977
Supersedes Dimension Sheet 29-170
all previous issues.
Mailed to: E, D, C/1901, 1928, 1929/PL

Quicklag® Plug-in Circuit Breakers

Page 7: Types QPH, QHP, QNPL Single Pole
Page 8: Types QPH, QHP, QNPL, HQNP
Two and Three Poles

AB DE-ION® Circuit Breakers

Type QPH, QHP and QNPL Single Pole Breakers

Applies to The Following Type Breakers:

QPH	1 Pole	22,000 Amp I.C.	25-70 Amp
QHP	1 Pole	65,000 Amp I.C. Mark 75	15-30 Amp
QNPL	1 Pole	.....	5 Amp

Terminal Arrangements, Load Side Only

Type	Ampere Rating	Wire Type	Wire Size
Wire Binding Screw	5-30	Copper	#14-#8
Pressure Type	35-70	Copper/Aluminum	#14-#2

Line End View

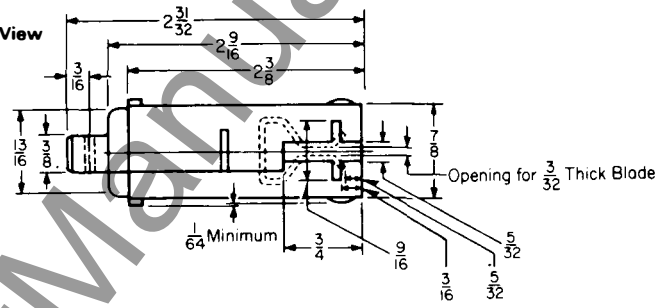

Front View

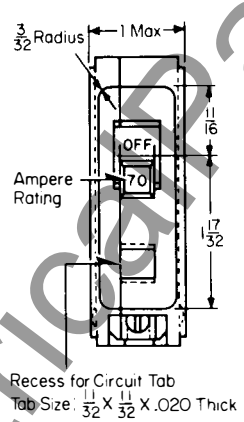

Side View

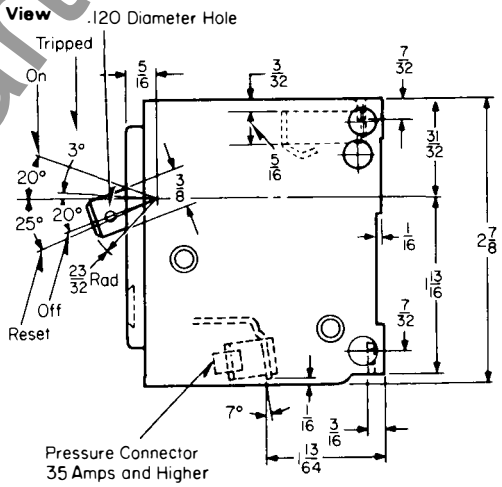

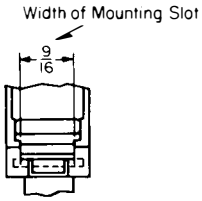

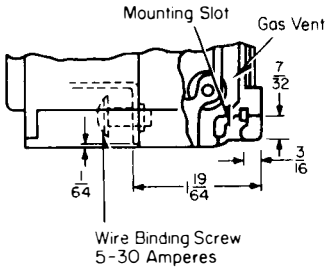

Reproduced from Drawing 504C020

www . ElectricalPartManuals . com

Type HQNP, QHP, QPH and QNPL Two and Three Pole Breakers

Applies to The Following Type Breakers:

HQNP	2 and 3 Pole	240 Volt	10,000 Amp I.C.	10-100 Amp
QHP	2 and 3 Pole	Mark 75	65,000 Amp I.C.	15- 30 Amp
QPH	2 and 3 Pole	120/240 or 240 Volt	22,000 Amp I.C.	15-100 Amp
QNPL	2 Pole	.....		5 Amp

Terminal Arrangements, Load Side Only

Type	Ampere Rating	Wire Type	Wire Size
Wire Binding Screw	5-30	Copper	#14-# 8
Pressure Type	35-70	Copper/Aluminum	#14-# 2
Pressure Type	90-100	Copper/Aluminum	# 4-1/0

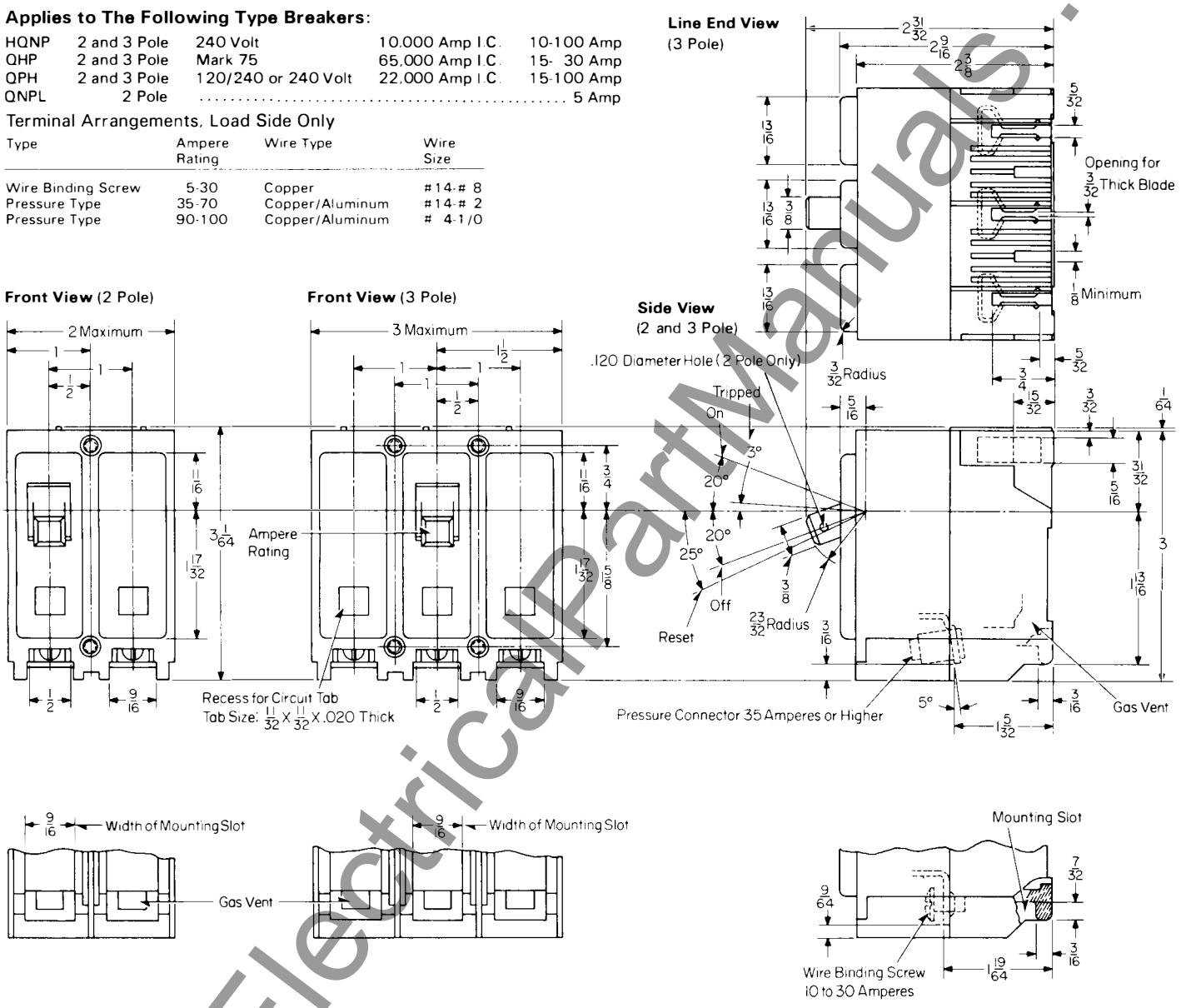

Reproduced from Drawings 179C653 and 179C655

Westinghouse Electric Corporation
Low Voltage Breaker Division
Beaver, Pennsylvania 15009

Printed in U.S.A.

www.ElectricalPartManuals.com

October, 1977
Supersedes Dimension Sheet 29-170
all previous issues.
Mailed to: E, D, C/1901, 1928, 1929/PL

Quicklag® Plug-in Circuit Breakers

Page 9: Types HQP, QPH Single Pole
Page 10: Type HQP Two Pole

AB DE-ION® Circuit Breakers

Type HQP and QPH Single Pole Breakers

Applies to The Following Type Breakers:

HQP	1 Pole	10,000 Amp I.C.	10-70 Amp
QPH	1 Pole	22,000 Amp I.C.	15-20 Amp

Line End View

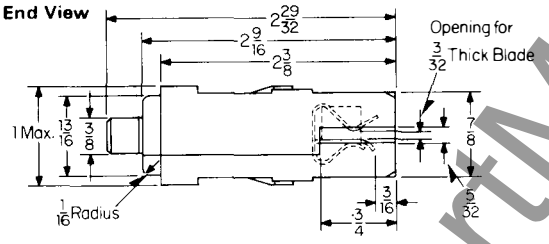

Front View

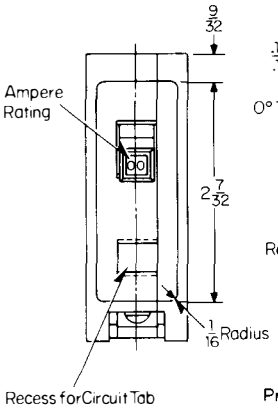

Side View

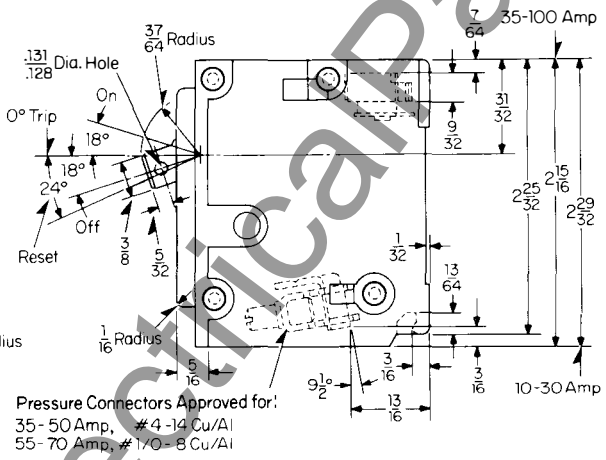

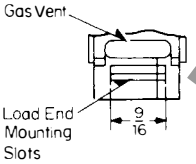

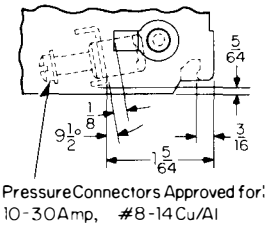

Reproduced from Drawing 1253C37

www.ElectricalPartManuals.com

Type HQP Two Pole Breaker

Applies to The Following Type Breaker:

HQP 2 Pole 120/240 Volt 10,000 Amp I.C. 10-125 Amp

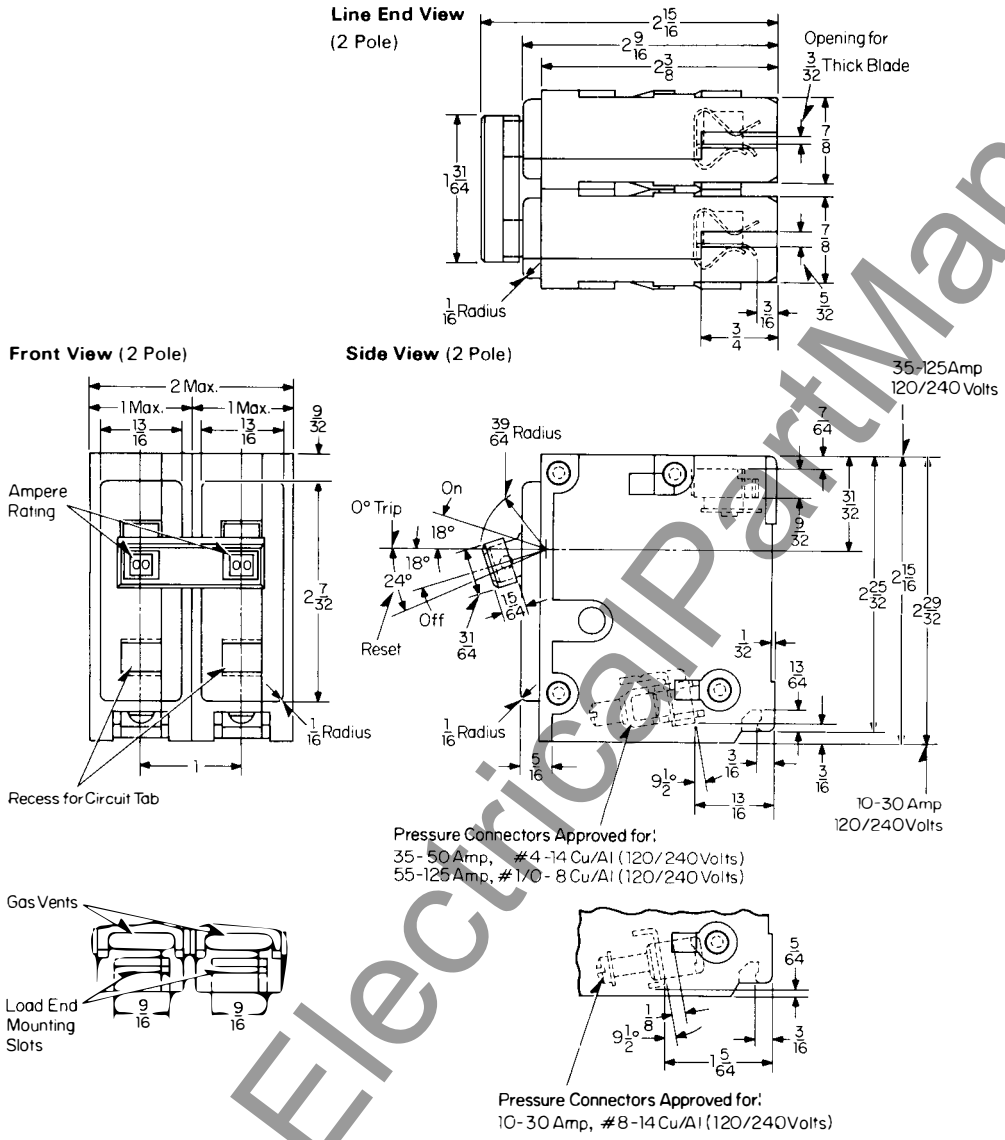

Reproduced from Drawing 1253C39

Westinghouse Electric Corporation
Low Voltage Breaker Division
Beaver, Pennsylvania 15009

Printed in U.S.A.

www.ElectricalPartManuals.com

October, 1977
Supersedes Dimension Sheet 29-170
all previous issues.
Mailed to: E, D, C/1901, 1928, 1929/PL

Quicklag® Bolt-on and Type BA
Circuit Breakers

Page 11: Types BA, QBH, HBA Single Pole
Page 12: Types BA, QBH, HBA Two and
Three Poles

AB DE-ION® Circuit Breakers

Type BA, QBH and HBA Single Pole Breakers

Terminal Arrangements, Load Side Only

Type	Ampere Rating	Wire Type	Wire Size
120/240 Volts			
Wire Binding Screw	15-30	CU	#14-#8
Pressure	35-70	Cu/Al	#14-#2
277 Volts			
Pressure	15-30	Cu	#14-#6
		Al	#12-#6

Applies to The Following Type Breakers:

BA 1 Pole, 277 Volts Only

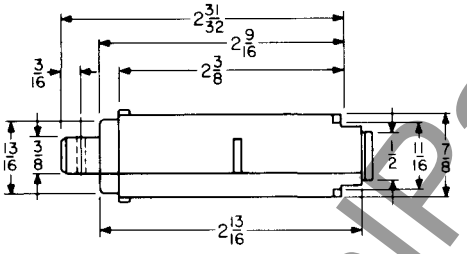

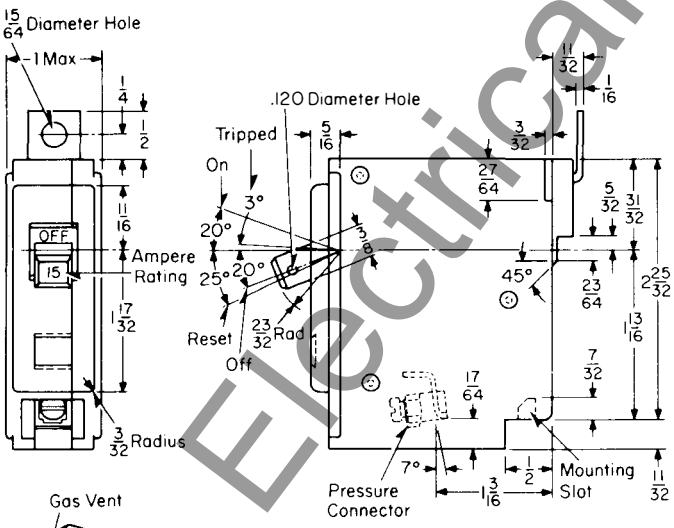

Applies to The Following Type Breakers:

QBH	1 Pole	22,000 Amp I.C.	25-70 Amp
HBA	1 Pole	65,000 Amp I.C. Mark 75	15-30 Amp

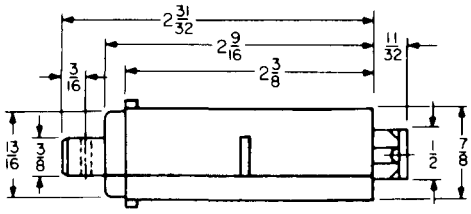

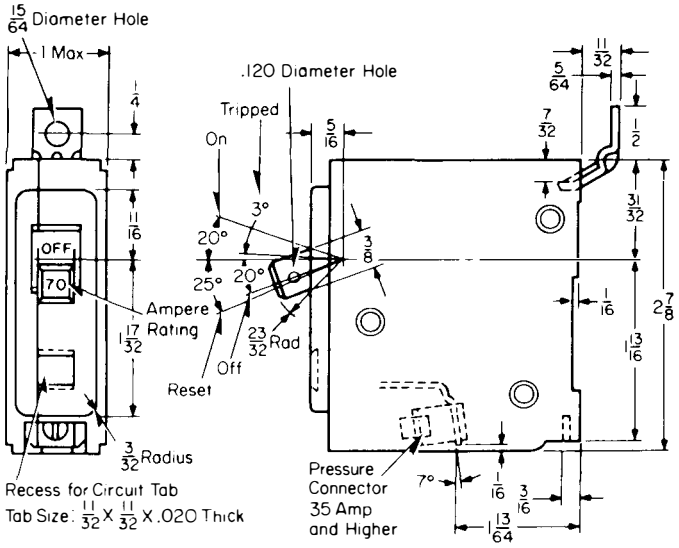

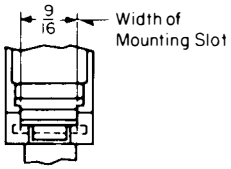

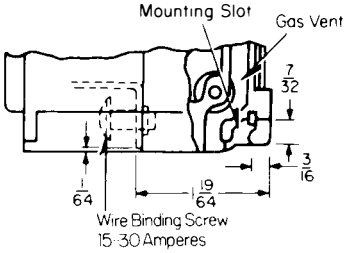

Reproduced from Drawings 176C333 and 503C701

www.ElectricalPartManuals.com

Type BA, HBA and QBH Two and Three Pole Breakers

Applies to The Following Type Breakers:

BA	2 and 3 Pole	240 Volt	10,000 Amp I.C.	10-100 Amp
HBA	2 and 3 Pole	Mark 75	65,000 Amp I.C.	15- 30 Amp
QBH	2 and 3 Pole	120/240 or 240 Volt	22,000 Amp I.C.	15-100 Amp

Terminal Arrangements, Load Side Only

Type	Ampere Rating	Wire Type	Wire Size
Wire Binding Screw	10- 30	Cu	#14-# 8
Pressure	35- 70	Cu/Al	#14-# 2
Pressure	90-100	Cu/Al	# 4-1/0

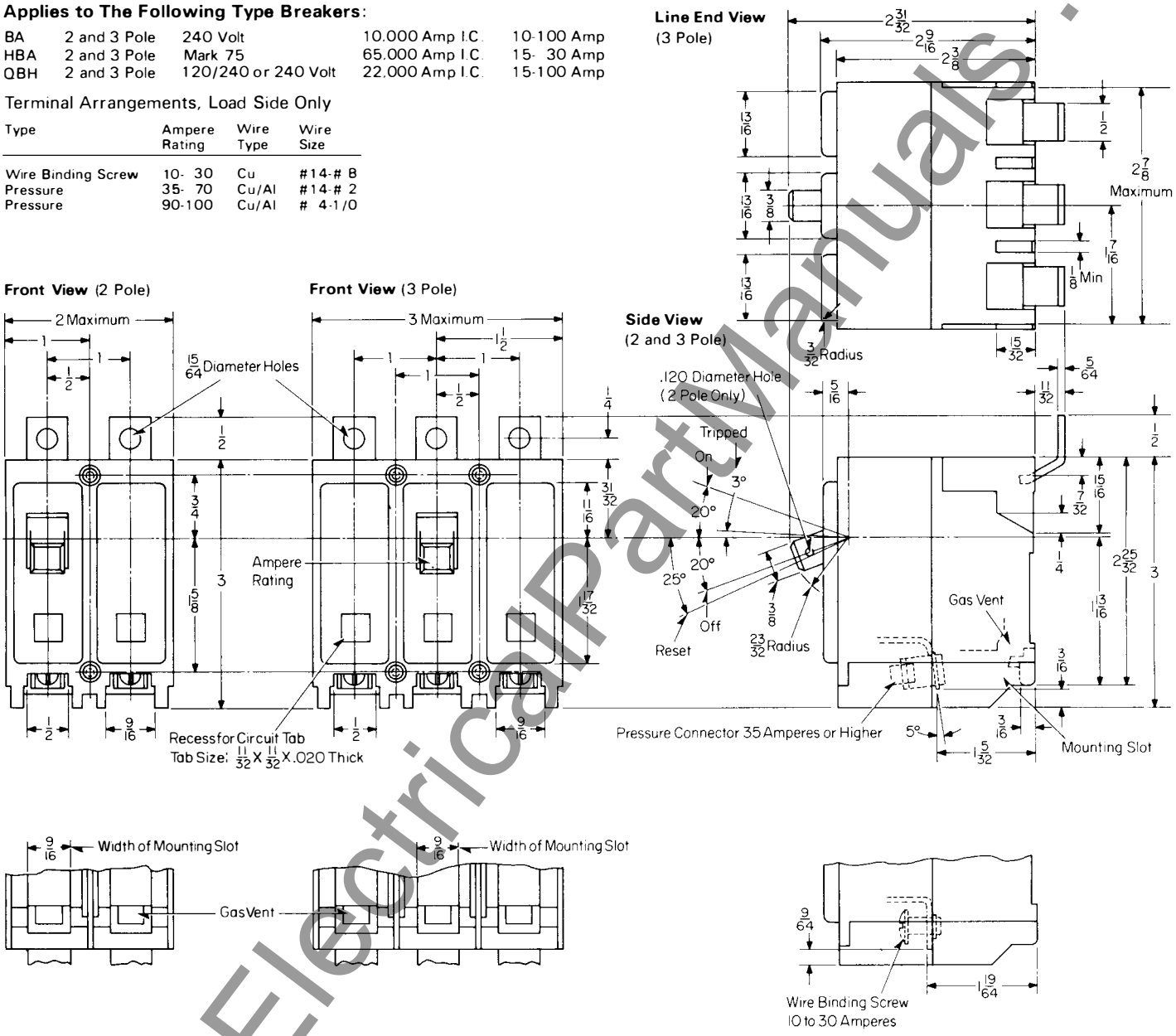

Reproduced from Drawings 179C654 and 179C656

Westinghouse Electric Corporation
Low Voltage Breaker Division
Beaver, Pennsylvania 15009

Printed in U.S.A.

www.ElectricalPartManuals.com

October, 1977
Supersedes Dimension Sheet 29-170
all previous issues.
Mailed to: E, D, C/1901, 1928, 1929/PL

Quicklag® Bolt-on and Type BA
Circuit Breakers

Page 13: Type BAB, QBH Single Pole
Page 14: Type BAB Two Pole

AB DE-ION® Circuit Breakers

Type BAB and QBH Single Pole Breakers

Applies to The Following Type Breakers:

BAB	1 Pole	10,000 Amp I.C.	10-70 Amp
QBH	1 Pole	22,000 Amp I.C.	15-20 Amp

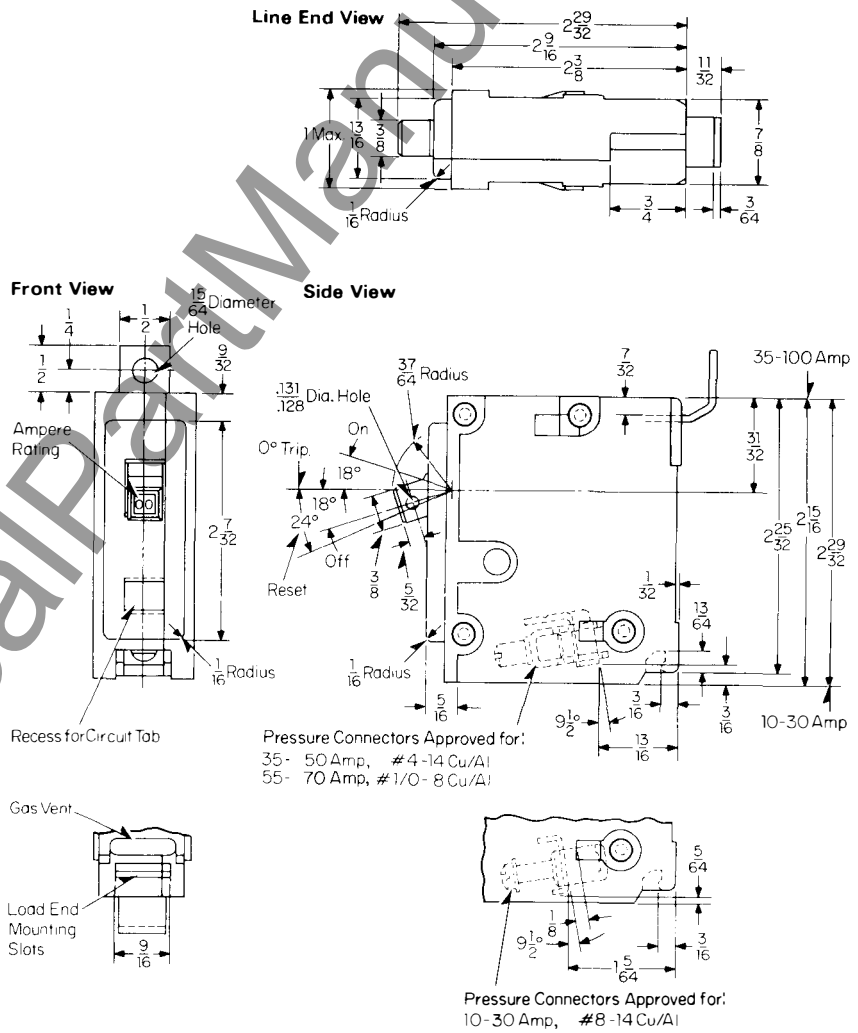

Reproduced from Drawing 1253C38

www . ElectricalPartManuals . com

Type BAB Two Pole Breaker

Applies to The Following Type Breaker:

BAB 2 Pole 120/240 Volt 10,000 Amp I.C. 10-125 Amp

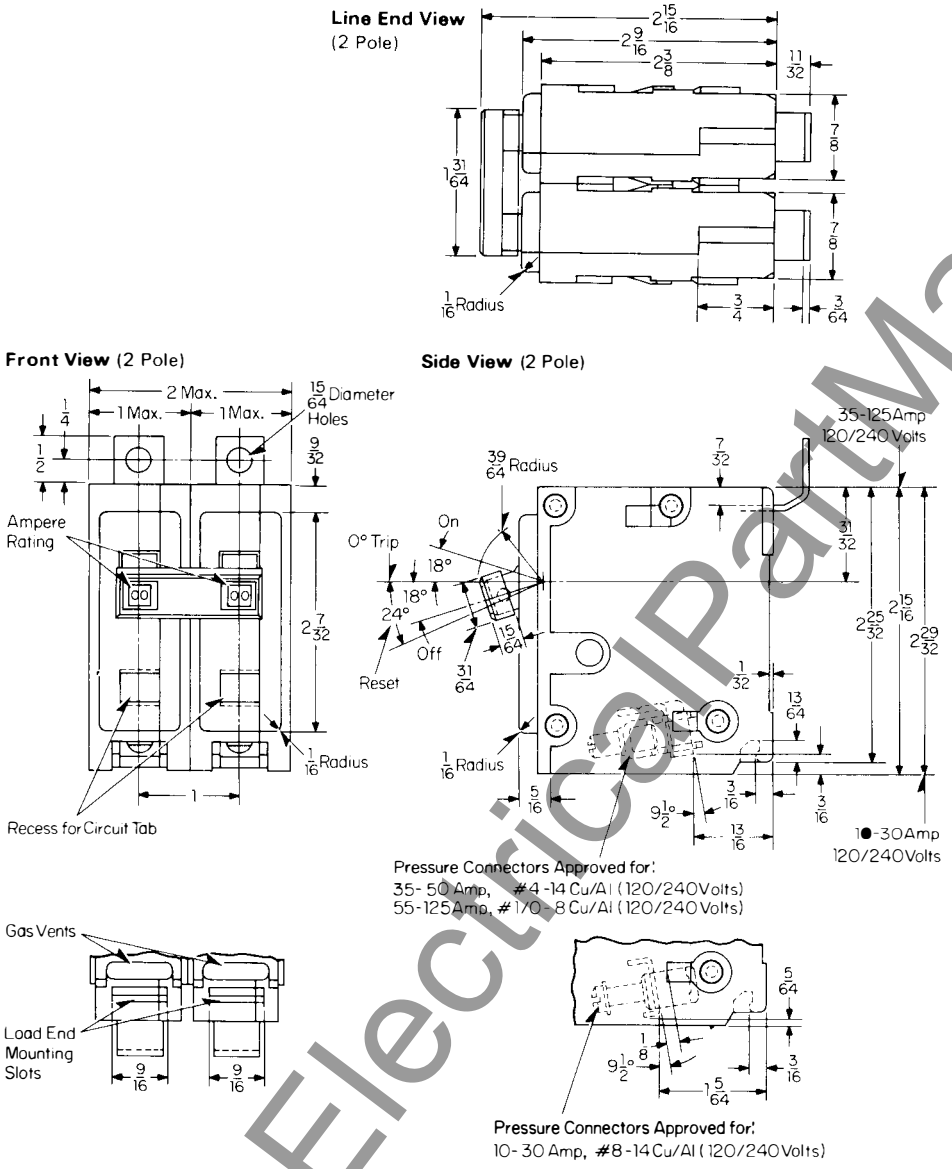

Reproduced from Drawing 1253C40

Westinghouse Electric Corporation
Low Voltage Breaker Division
Beaver, Pennsylvania 15009

Printed in U.S.A.

www.ElectricalPartManuals.com

October, 1977
Supersedes Dimension Sheet 29-170
all previous issues.
Mailed to: E, D, C/1901, 1928, 1929/PL

Quicklag® Bolt-on Circuit Breakers

Page 15: Types QCL, QHCL, QCH Single Pole
Page 16: Types QCL, QHCL, QCH, QHC, HQC
Two and Three Poles

AB DE-ION® Circuit Breakers

Type QCL, QHCL and QCH Single Pole Breakers

Applies to The Following Type Breakers:

QCL	1 Pole		5 Amp
QHCL	1 Pole	65,000 Amp I.C. Mark 75	15-30 Amp
QCH	1 Pole	22,000 Amp I.C.	15-70 Amp

Terminal Arrangements, Load Side Only

Type	Ampere Rating	Wire Type	Wire Size
Wire Binding Screw	5-30	Copper	#14-#8
Pressure Type	35-70	Copper/Aluminum	#14-#2

Line End View

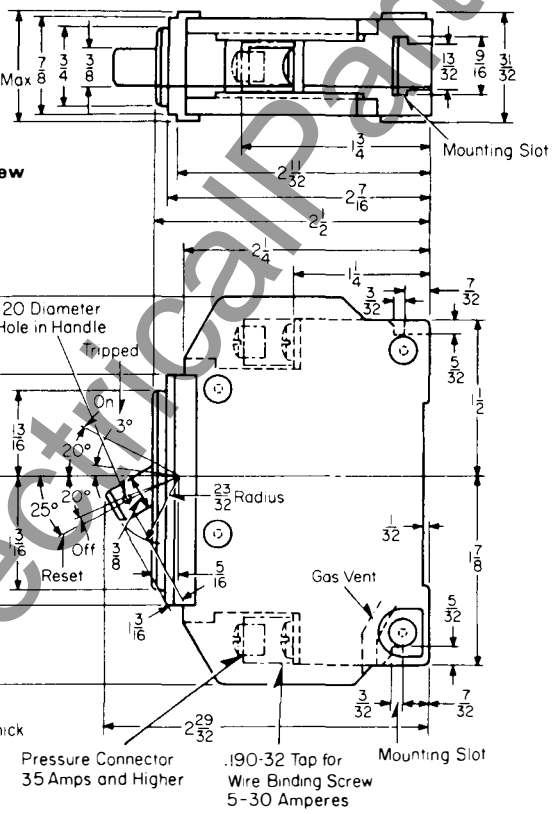

Front View

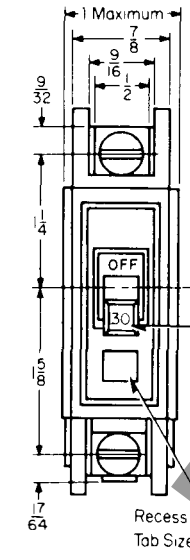

Side View

Face Mounting Plate
Style Number 1614256
(For above Style Breakers Only)

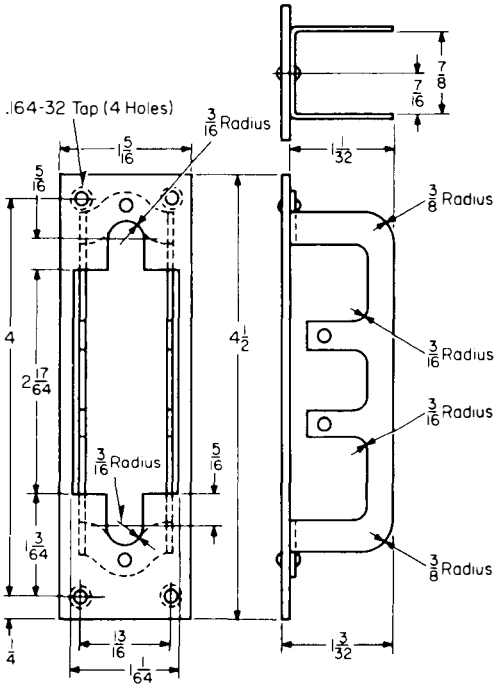

Reproduced from Drawing 133A059

www.ElectricalPartManuals.com

Type QCH, QHCL, HQC and QCL Two and Three Pole Breakers

Applies to The Following Type Breakers:

QCH	2 and 3 Pole	120/240 or 240 Volt	22,000 Amp I.C.	15-100 Amp
QHCL and QHC	2 and 3 Pole	Mark 75	65,000 Amp I.C.	15- 30 Amp
HQC	2 and 3 Pole	240 Volt	10,000 Amp I.C.	10-100 Amp
QCL	2 Pole			5 Amp

Terminal Arrangements, Load Side Only

Type	Ampere Rating	Wire Type	Wire Size
Wire Binding Screw	5-30	Copper	#14-#8
Pressure Type	35-70	Copper/Aluminum	#14-#2
Pressure Type	90-100	Copper/Aluminum	# 4-#1

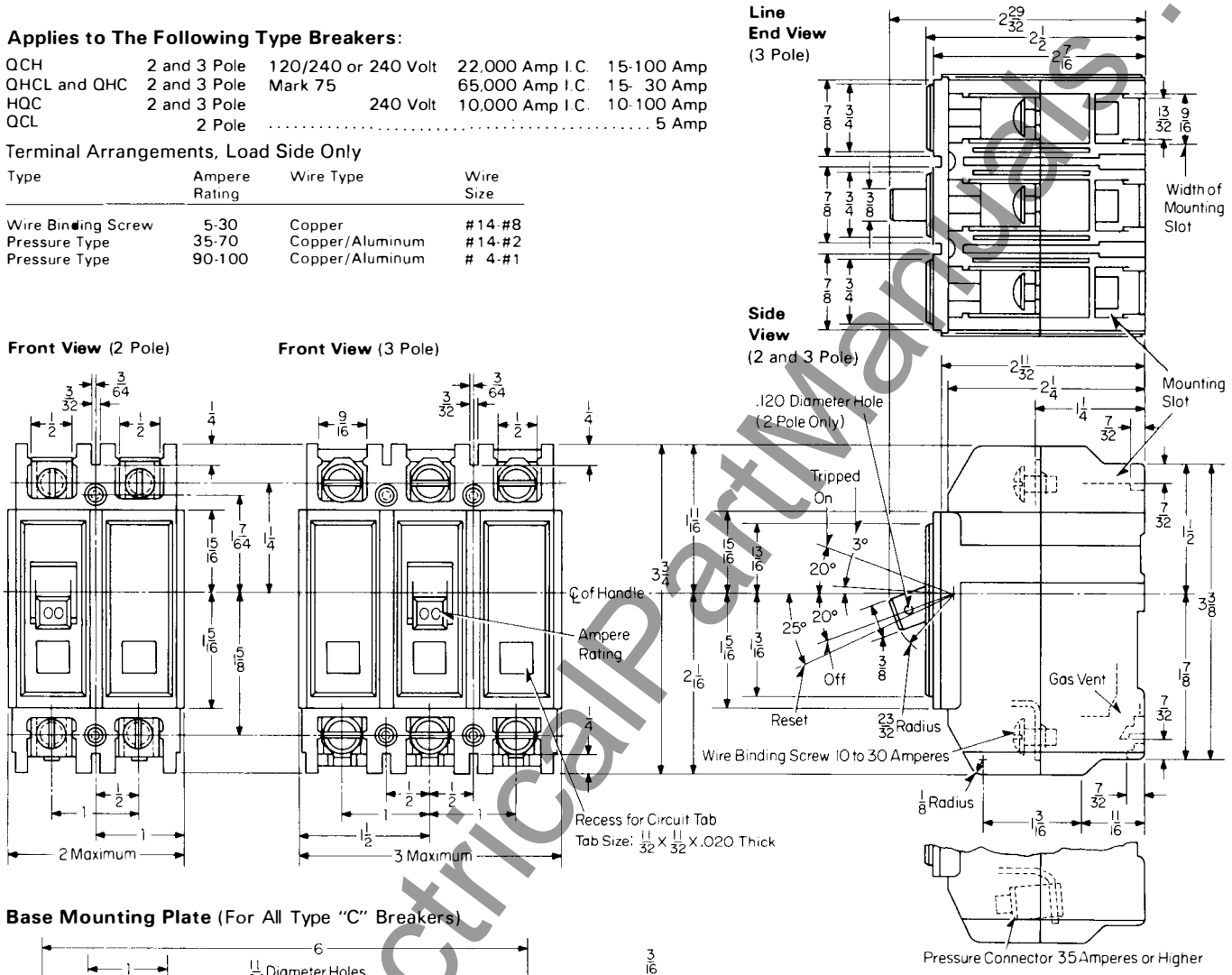

Base Mounting Plate (For All Type "C" Breakers)

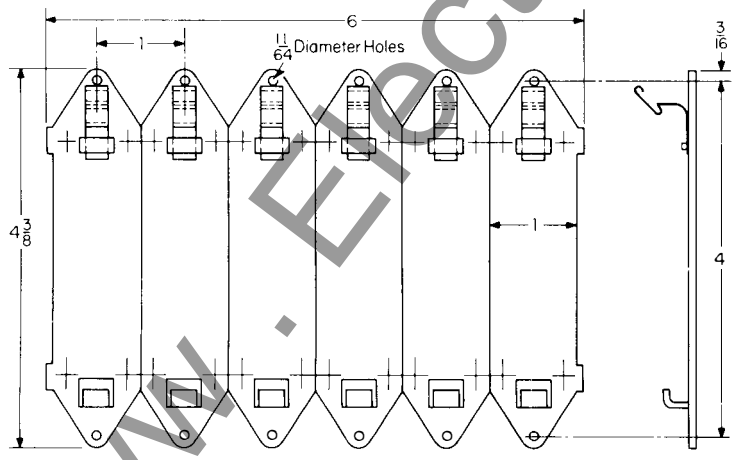

Mounting Plate Style Number 207B513G01 Maximum of Six 1-Poles, Three 2-Poles or Two 3-Poles; Plates May be Separated When Necessary

2 Pole Face Mounting Plate (S#313C083G01)
(For Above Design Breakers Only)

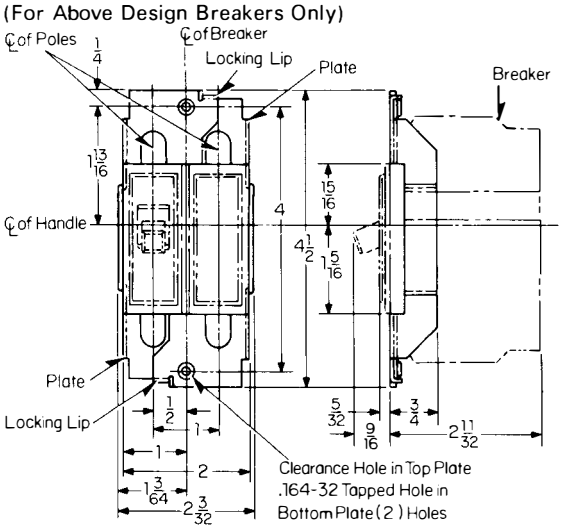

Reproduced from Drawings 315C110 and 503C881

Printed in U.S.A.

www.ElectricalPartManuals.com

October, 1977
Supersedes Dimension Sheet 29-170
all previous issues.
Mailed to: E, D, C/1901, 1928, 1929/PL

Quicklag® Bolt-on Circuit Breakers

Page 17: Type QC Single Pole
Page 18: Type QC Two Poles

AB DE-ION® Circuit Breakers

Type QC Single Pole Breaker

Applies to The Following Type Breakers:

QC 1 Pole 10,000 Amp I.C. 10-70 Amp

Line End View

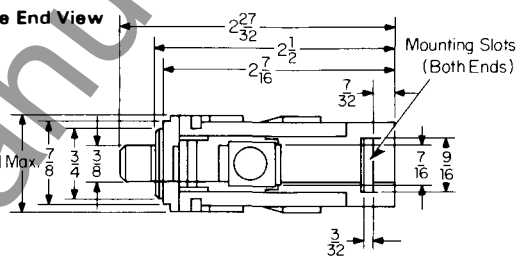

Front View

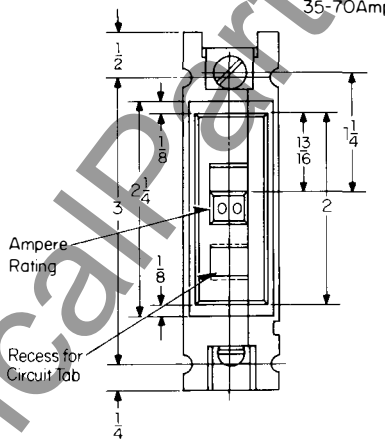

Side View

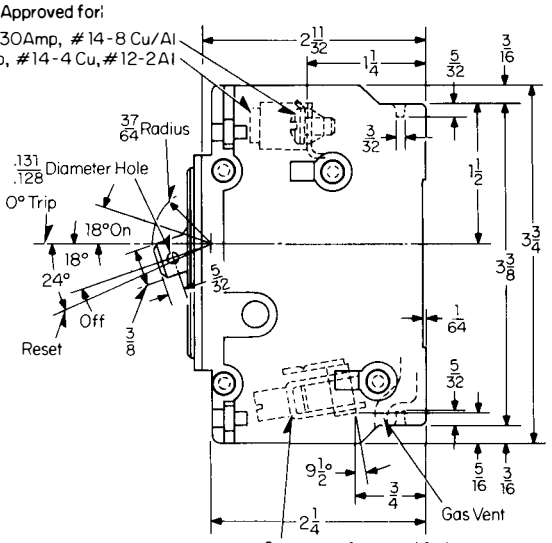

Face Mounting Plate
Style Number 1258C07G01
(For Above Style Breakers Only)

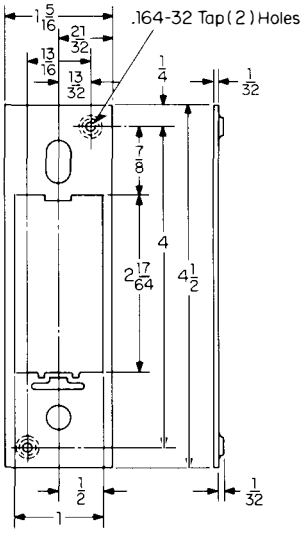

Connector Approved for:
10-20Amp, #14-10 Cu/Al

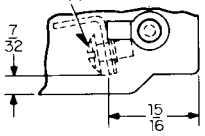

10-15 and 20Amp

Reproduced from Drawing 1257C40

www . ElectricalPartManuals . com

Type QC Two Pole Breaker

Applies to The Following Type Breaker:

QC 2 Pole 120/240 Volt 10,000 Amp I C 10-100 Amp

Line End View (2 Pole)

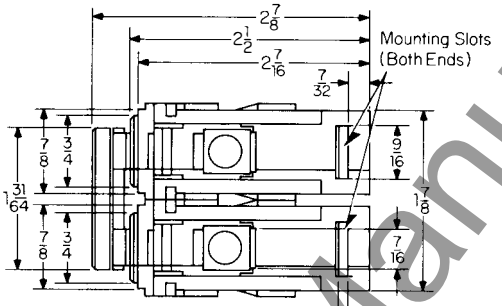

Front View
(2 Pole)

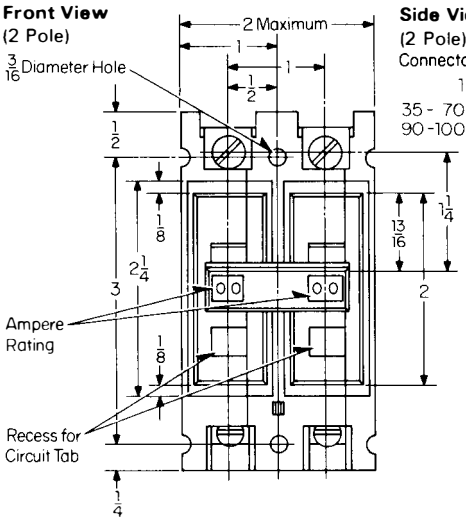

Side View
(2 Pole)

Connector Approved for:
10 - 30 Amp, #14 - 8 Cu/Al
35 - 70 Amp, #14 - 4 Cu, #12-2 Al
90 -100 Amp, # 6 - 1 Cu/Al

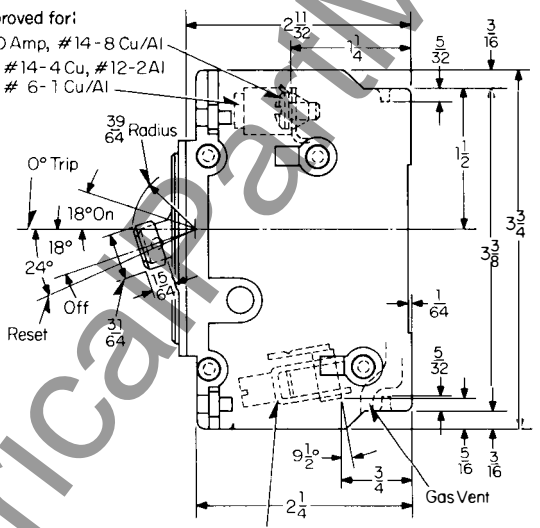

Connector Approved for:
10 - 20 Amp, #14-10 Cu/Al
25 - 50 Amp, #14- 4 Cu/Al
55 -100 Amp, # 8-1/0 Cu/Al

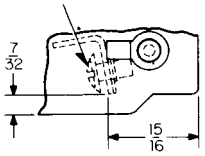

10-15 and 20Amp

Face Mounting Plate
Style Number 1265C83G01
(For Above Style Breakers Only)

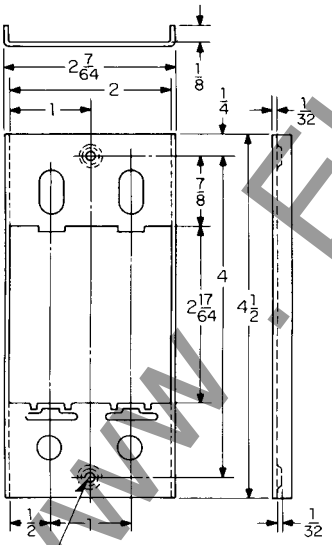

.164-32 Tap (2) Holes

Reproduced from Drawing 1257C50

www.ElectricalPartManuals.com

Printed in U.S.A.

October, 1977
Supersedes Dimension Sheet 29-170
all previous issues.
Mailed to: E, D, C/1901, 1928, 1929/PL

Types EB, EHB, FB, MARK 75® HFB

Page 19: Outline Dimensions
Page 20: Drilling Plans

AB DE-ION® Circuit Breakers

Type EB, EHB, FB and MARK 75 HFB 1, 2, 3, 4 Pole Thermal Magnetic Breakers (See Note Below)

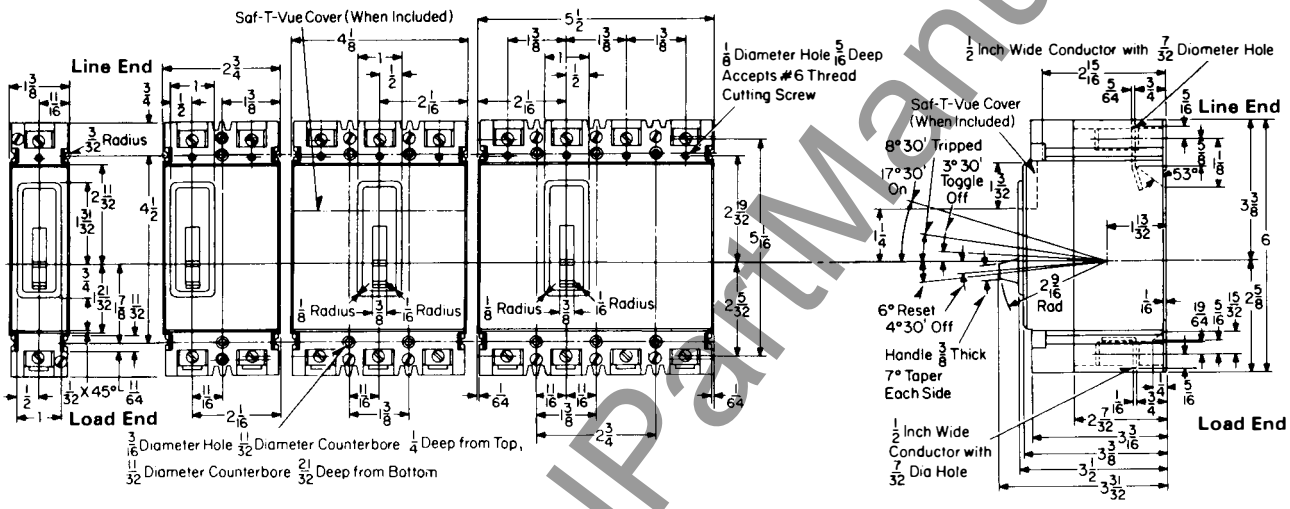

2 and 3 Pole FB and HFB Magnetic Only Breakers
Current carrying parts are omitted from center pole for 2-pole breakers.

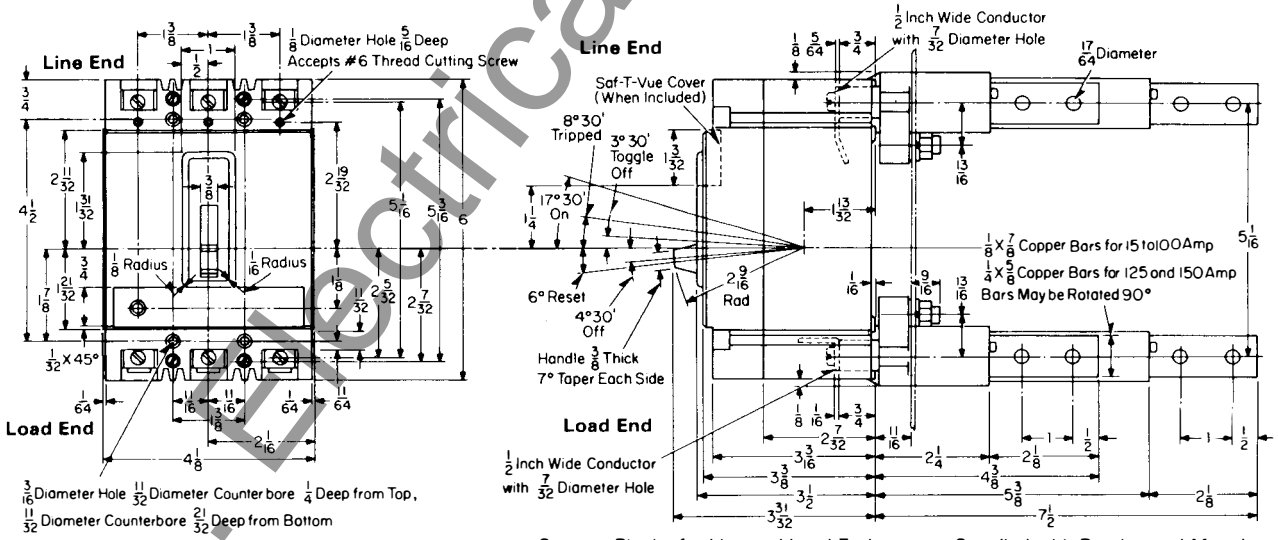

Note: Mark 75 HFB Thermal Magnetic Breakers Two-pole breakers are furnished in three-pole frame with current carrying parts omitted from center pole.

Support Blocks for Line and Load Ends are not Supplied with Breaker and Must be Ordered Separately. Refer to Drawing 506C144 When Ordering Support Blocks All Parts Necessary to Convert a Standard Breaker are Included.

Plug-In and Bolt-On Detail

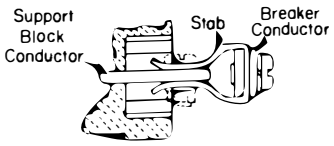

Plug-in
Bolt stab to breaker conductor, then plug into support block

Bolt-on
Bolt stab to support block, then bolt support block assembly to breaker conductors.

Reproduced From Drawing 4967D20, 4967D30, 4985D60 and 4979D66

www.ElectricalPartManuals.com

Drilling Plans for Type EB, EHB, FB and MARK 75 Type HFB Breaker

Drilling Plans 1, 2 and 3 Pole

2 Pole Mark 75 and 2 Pole Magnetic Only Use 3 Pole Drilling

For Mounting Bolts

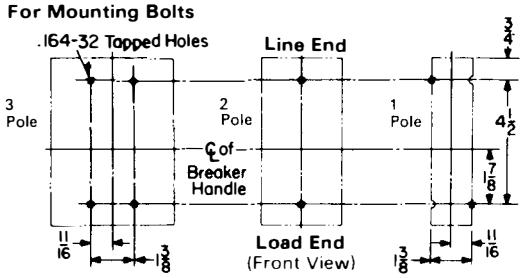

For Rear Connected Studs

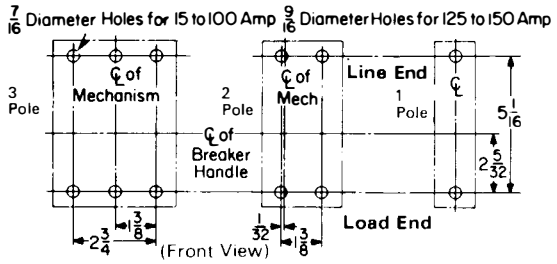

Plug-In Block

15 to 150 Amp 2 Pole Breakers (Thermal Magnetic)

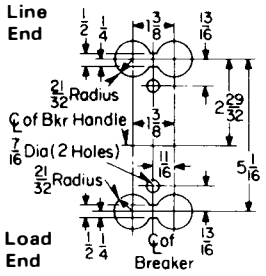

15 to 150 Amp 3 Pole Breakers, 2 Pole Magnetic Only, and Mark 75 Breakers

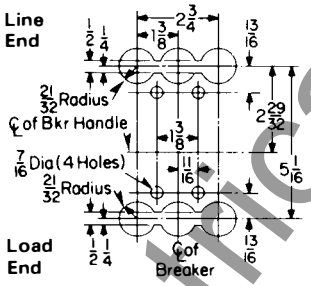

Front Cover Cutout

1, 2 and 3 Pole

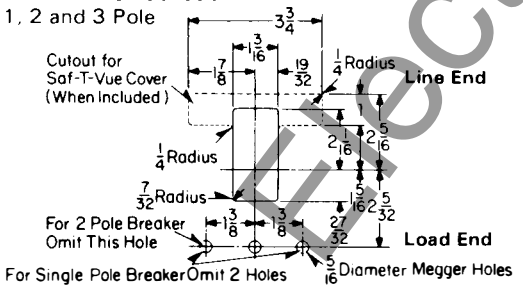

Front Cover Cutout

4 Pole

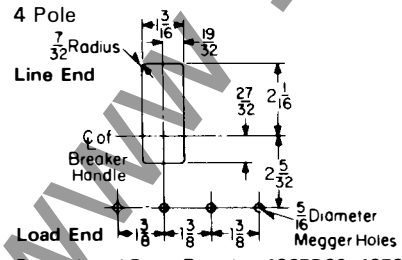

Reproduced From Drawing 4967D20, 4979D66 and 4967D30

Drilling Plans 4 Pole

For Mounting Bolts

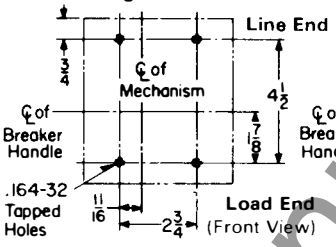

For Rear Connected Studs

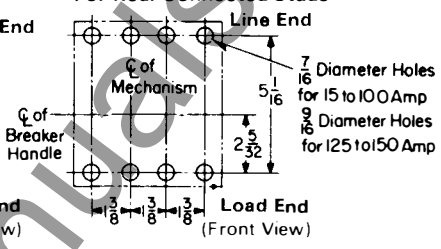

Terminal Arrangements

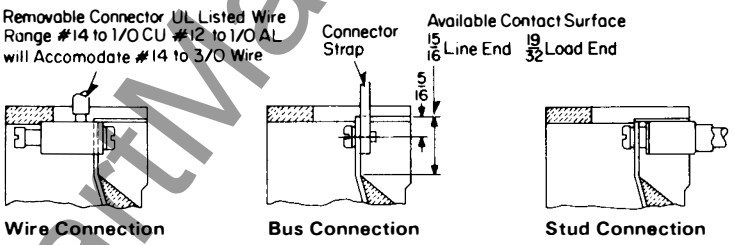

Rear Connected Studs

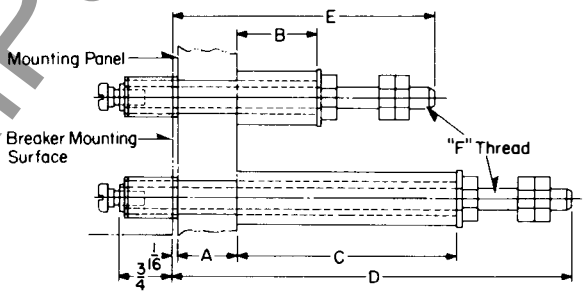

For 15 to 100 amp Breakers

Stud Ampere Rating	Stud Style Number	Panel Thickness A	Tube Length B	Tube Length C	Tube Style Number	D	E	F
100 A Short	451D874G01	1"	1 1/16		32B9446H20			
100 A Short	451D874G01	11/16 to 15/16	1 3/8		32B9446H21			
100 A Short	451D874G01	3/8 to 5/8	1 11/16		32B9446H22	6 1/8	3 5/8	5/16-18
100 A Short	451D874G01	1/4 to 5/16	2		32B9446H23			
100 A Long	451D874G02	1"		3 7/16	32B9446H24			
100 A Long	451D874G02	11/16 to 15/16		3 3/4	32B9446H25			
100 A Long	451D874G02	3/8 to 5/8		4 1/16	32B9446H26			
100 A Long	451D874G02	1/4 to 5/16		4 3/8	32B9446H27			

For 125 to 150 amp Breakers

150 A Short	374D883G01	1	1 1/16		374D883H06			
150 A Short	374D883G01	11/16 to 15/16	1 3/8		374D883H07			
150 A Short	374D883G01	3/8 to 5/8	1 11/16		374D883H08			7/16-14
150 A Short	374D883G01	1/4 to 5/16	2		374D883H09	7 1/2	4 1/4	
150 A Long	374D883G02	1		3 7/16	374D883H10			
150 A Long	374D883G02	11/16 to 15/16		3 3/4	374D883H11			
150 A Long	374D883G02	3/8 to 5/8		4 1/16	374D883H12			
150 A Long	374D883G02	1/4 to 5/16		4 3/8	374D883H13			

Ordering Instructions: Stud complete consists of one stud assembly and one tube as per chart. Order long and short studs and tubes as required to obtain proper bus spacing.

Printed in U.S.A.

www.ElectricalPartManuals.com

October, 1977
Supersedes Dimension Sheet 29-170
all previous issues.
Mailed to: E, D, C/1901, 1928, 1929/PL

Type LFB Current Limiting Attachment
for Type FB Circuit Breakers

AB DE-ION® Circuit Breakers

Type LFB Current Limiting Attachment

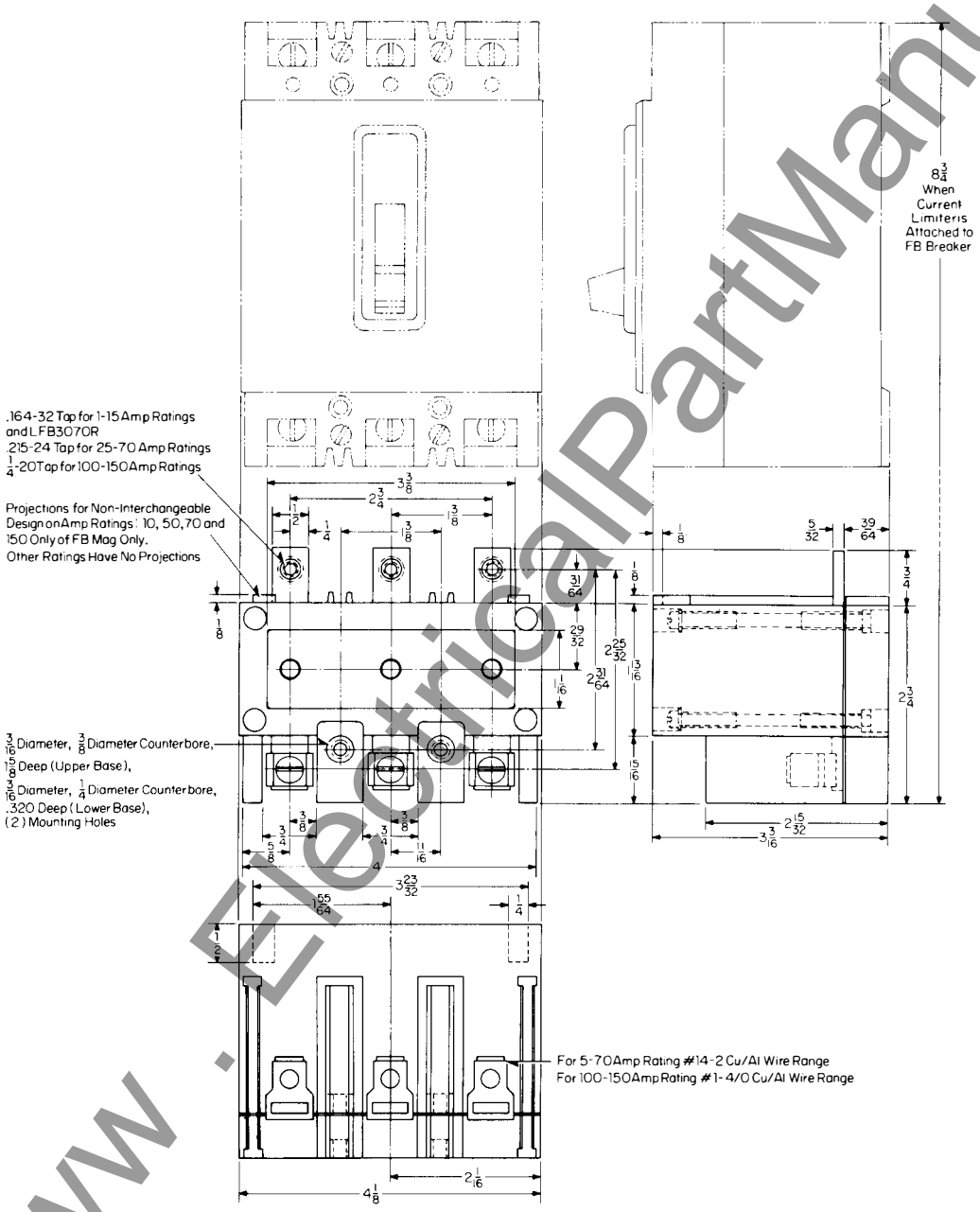

Reproduced From Drawing 5678D30

www.ElectricalPartManuals.com

www.ElectricalPartManuals.com

Printed in U.S.A.

Westinghouse Electric Corporation
Low Voltage Breaker Division
Beaver, Pennsylvania 15009

October, 1977
Supersedes Dimension Sheet 29-170
all previous issues.
Mailed to: E, D, C/1901, 1928, 1929/PL

Page 23: Types CA and CAH 225 Amperes
Page 24: Types JA, KA, MARK 75®
Type HKA 225 Amperes

AB DE-ION® Circuit Breakers

Type CA and CAH Breakers

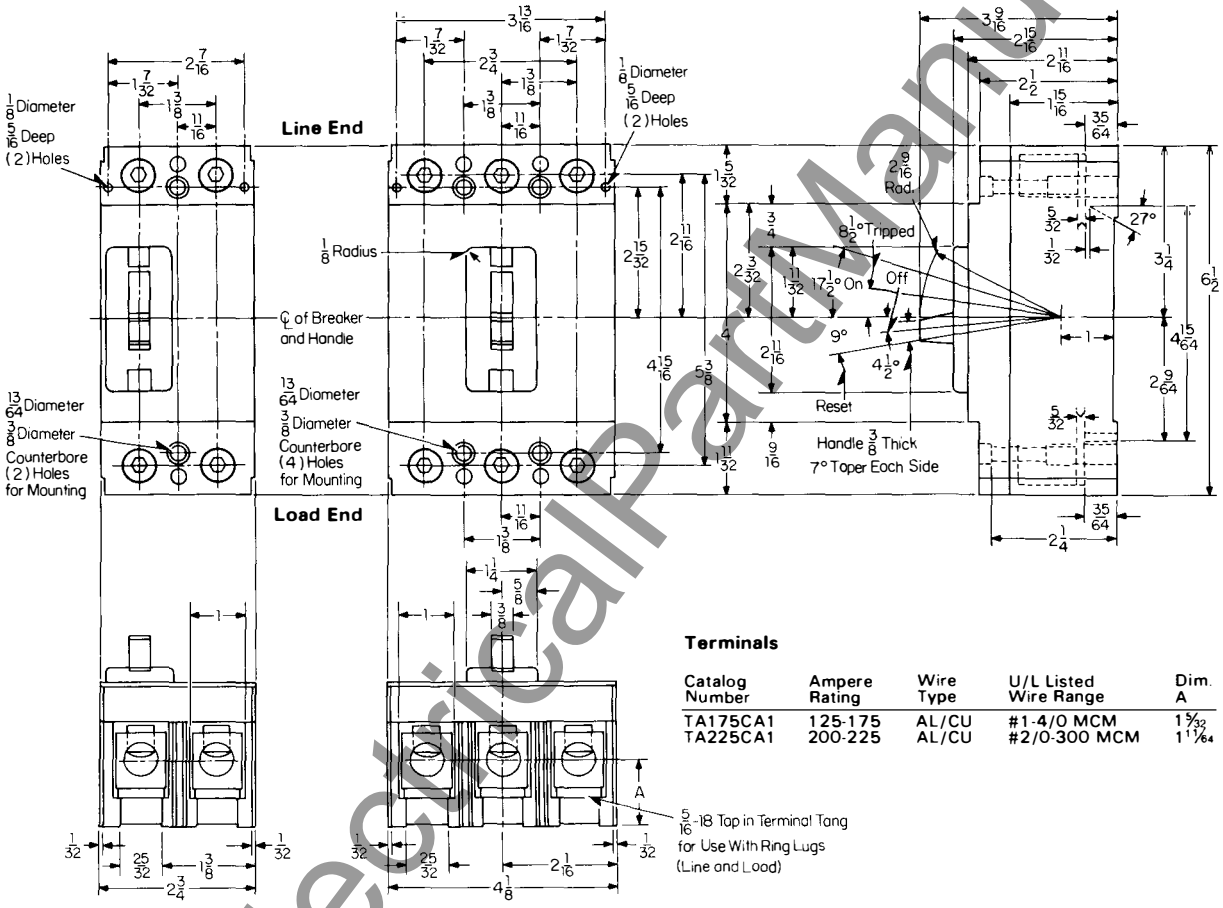

Terminals

Catalog Number	Ampere Rating	Wire Type	U/L Listed Wire Range	Dim. A
TA175CA1	125-175	AL/CU	#1-4/0 MCM	1 5/32
TA225CA1	200-225	AL/CU	#2/0-300 MCM	1 11/64

Drilling Plan

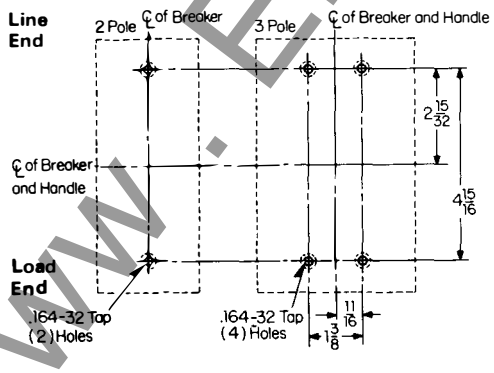

Front Cover Cutout

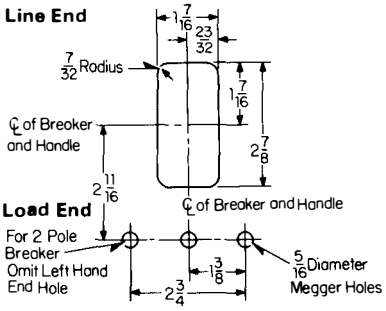

Reproduced From Drawing 374D130

www.ElectricalPartManuals.com

Type JA, KA and MARK 75® Type HKA Breakers

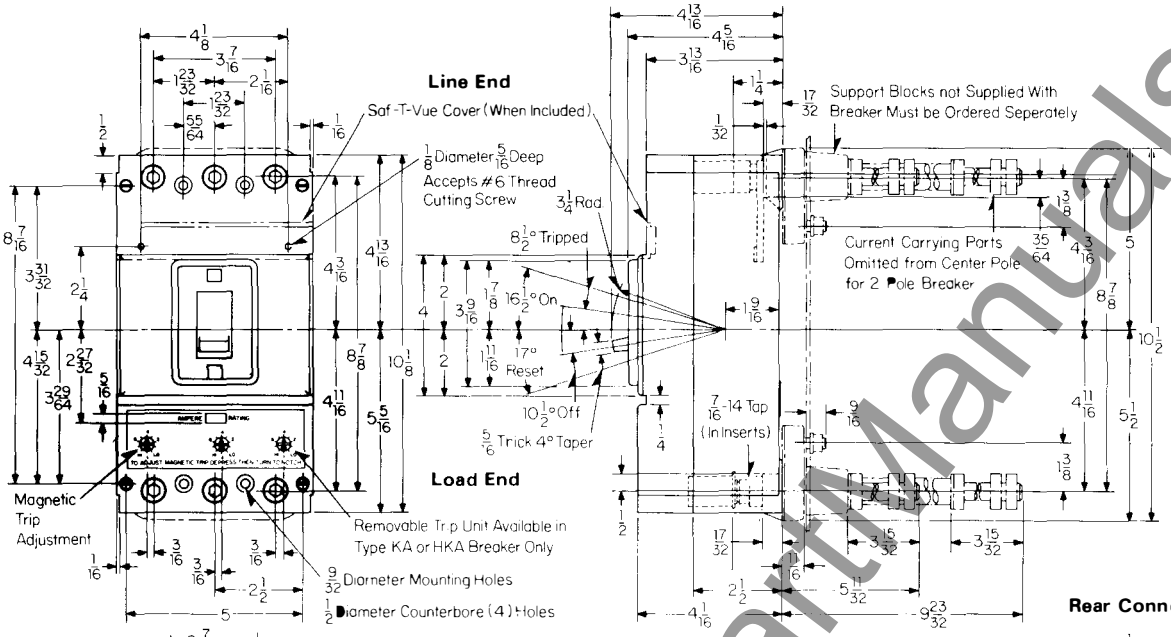

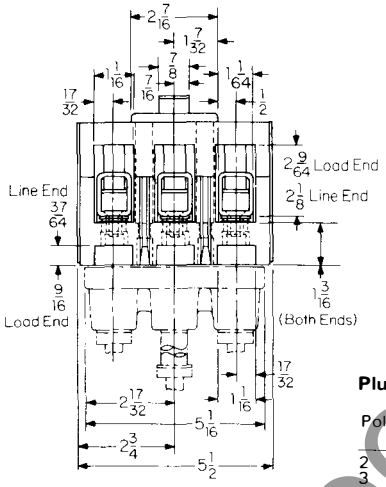

Rear Connected Studs

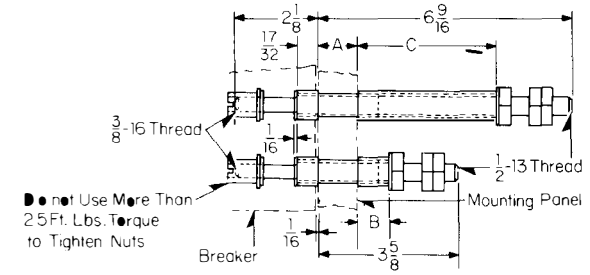

Terminal Arrangements

Copper Cable Only (Supplied As Standard)
Cat. #T225LA-Wire Size #6-350 MCM

Al/Cu Cable (Must Be Specified)
Cat. #TA225LA1-Wire Size #6 350 MCM Copper or #4-350 MCM Aluminum Cable

Plug-In-Adapter Kit

Poles	Ampere Rating	Kit Style Number	Thread Size
2	70-225	313C644G29	1/2 - 13
3	70-225	313C644G30	1/2 - 13

Stud Ampere Rating	Stud Style Number	Panel Thickness A	Tube Length B	Tube Length C	Tube Style Number
225A short	656D565G01	3/4 to 1	2 7/32		456D983H05
225A long	656D565G02	3/4 to 1		3 25/32	456D983H08
225A short	656D565G01	1/2 to 3/4	1 3/32		456D983H06
225A long	656D565G02	1/2 to 3/4		4 1/32	456D983H09
225A short	656D565G01	1/4 to 1/2	1 11/32		456D983H07
225A long	656D565G02	1/4 to 1/2		4 9/32	456D983H10

Stud complete consists of one stud assembly and one tube as per chart. Order long and short studs as required to obtain proper bus spacing.

Drilling Plans

For Mounting Bolts

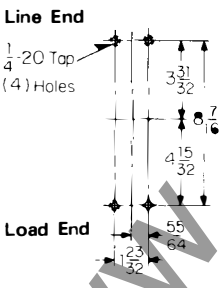

For Rear Connected Studs

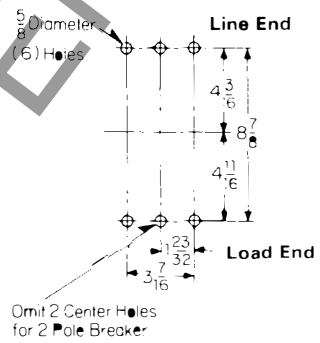

For Plug-In-Block

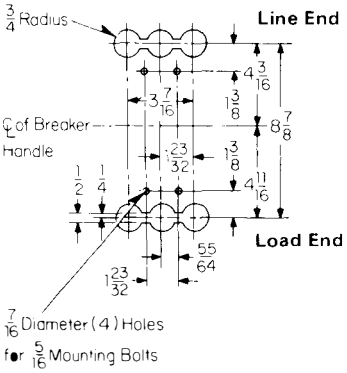

Front Cover Cutout

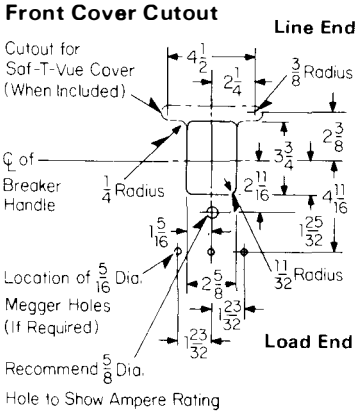

Reproduced From Drawing 456D970

Printed in U.S.A.

www.ElectricalPartManuals.com

October, 1977
Supersedes Dimension Sheet 29-170
all previous issues.
Mailed to: E, D, C/1901, 1928, 1929/PL

Page 25: Types JB, KB and MARK 75®
Type HKB 250 Amperes
Page 26: Type DA 400 Amperes

AB DE-ION® Circuit Breakers

Type JB, KB and MARK 75® Type HKB Breakers

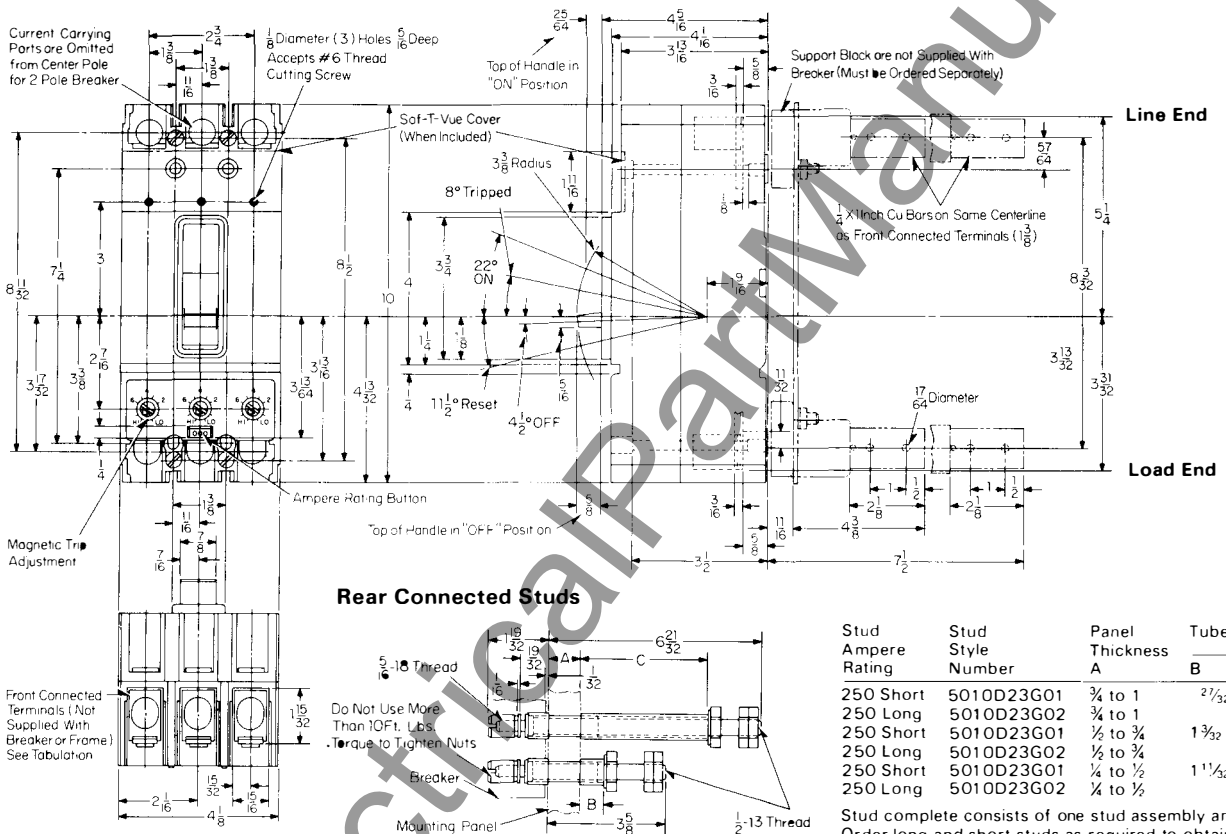

Rear Connected Studs

Stud Ampere Rating	Stud Style Number	Panel Thickness A	Tube Length B	Tube Length C	Tube Style Number
250 Short	5010D23G01	3/4 to 1	2 7/32		456D983H05
250 Long	5010D23G02	3/4 to 1		3 7/8	5010D23H05
250 Short	5010D23G01	1/2 to 3/4	1 3/32		456D983H06
250 Long	5010D23G02	1/2 to 3/4		4 1/8	5010D23H06
250 Short	5010D23G01	1/4 to 1/2	1 11/32		456D983H07
250 Long	5010D23G02	1/4 to 1/2		4 3/8	5010D23H07

Stud complete consists of one stud assembly and one tube as per chart
Order long and short studs as required to obtain proper bus spacing.

Terminal Arrangements

Cable	Catalog Number	Amp Rating	Wire Size
Cu/Al Single	T250KB	70 to 250	#4 to 350MCM/Cu #2 to 350MCM/Al
*Cu/Al Single	TA250KB	70 to 250	#4 to 350MCM

*Aluminum Body

Drilling Plans

For Mounting Bolts
(Front Connected Terminals)

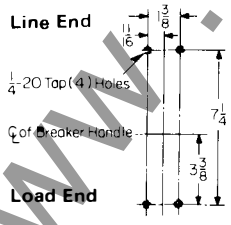

For Rear Connected Studs

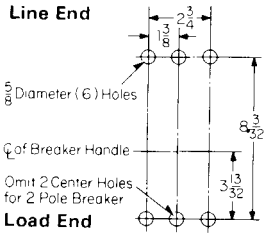

For Plug-in Blocks

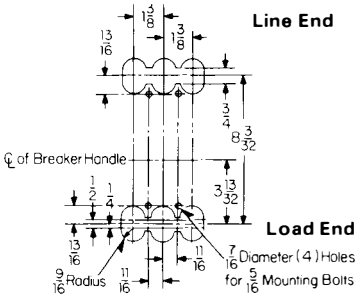

Front Cover Cutout

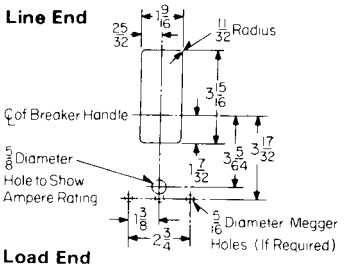

Reproduced from Drawing 4974D50

www.ElectricalPartManuals.com

Type DA Breaker

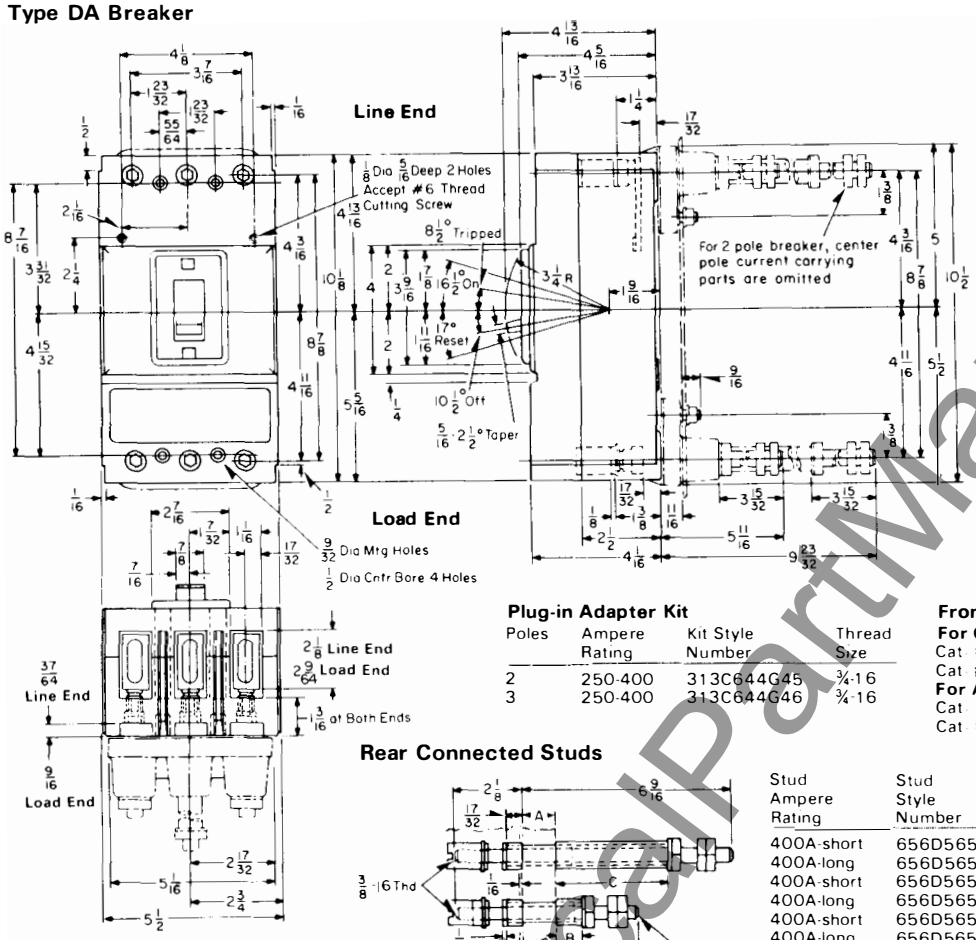

Plug-in Adapter Kit

Poles	Ampere Rating	Kit Style Number	Thread Size
2	250-400	313C644G45	¾-16
3	250-400	313C644G46	¾-16

Front Connected Terminals

For Copper Cable (Supplied as Standard)
Cat. #T350DA Wire Size 250-500 MCM (Single Cable)
Cat. #T400DA2 Wire Size 3/0-250 MCM (Double Cable)
For AL/CU Cable (Must be Specified)
Cat. #TA350DA Wire Size 250-500 MCM (Single Cable)
Cat. #TA400DA1 Wire Size 3/0-250 MCM (Double Cable)

Rear Connected Studs

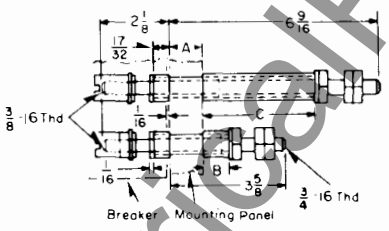

Stud Ampere Rating	Stud Style Number	Panel Thickness A	Tube length B	Tube length C	Tube Style Number
400A-short	656D565G03	¾ to 1	27/32		313C909H17
400A-long	656D565G04	¾ to 1		3 25/32	313C909H20
400A-short	656D565G03	½ to ¾	1 3/32		313C909H18
400A-long	656D565G04	½ to ¾		4 1/32	313C909H21
400A-short	656D565G03	¼ to ½	1 11/32		313C909H19
400A-long	656D565G04	¼ to ½		4 9/32	313C909H22

Stud complete consists of one stud assembly and one tube as per chart

Drilling Plans

For Mounting Bolts

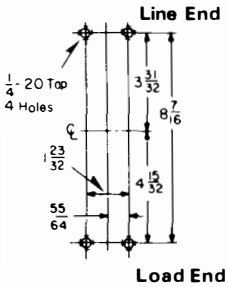

For Rear Connected Studs

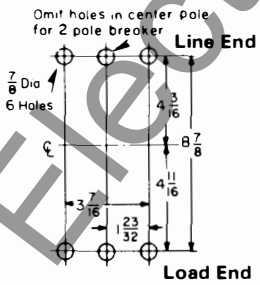

For Plug-in Block

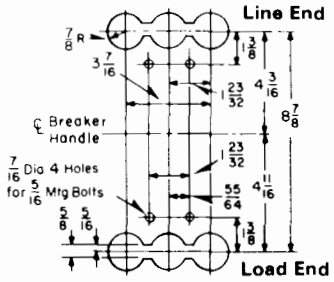

Front Cover Cutout

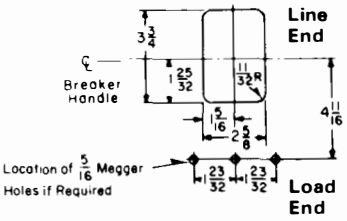

Reproduced From Drawing 374D640

Westinghouse Electric Corporation
Low Voltage Breaker Division
Beaver, Pennsylvania 15009

Printed in U.S.A.

www.ElectricalPartManuals.com

October, 1977
Supersedes Dimension Sheet 29-170
all previous issues.
Mailed to: E, D, C/1901, 1928, 1929/PL

Page 27: Types LAB, LA and MARK 75®
Type HLA 400 Amperes
Page 28: Types LB, LBB and MARK 75®
Type HLB 400 Amperes

AB DE-ION® Circuit Breakers

Type LAB, LA and MARK 75® Type HLA Breakers 400 Amperes

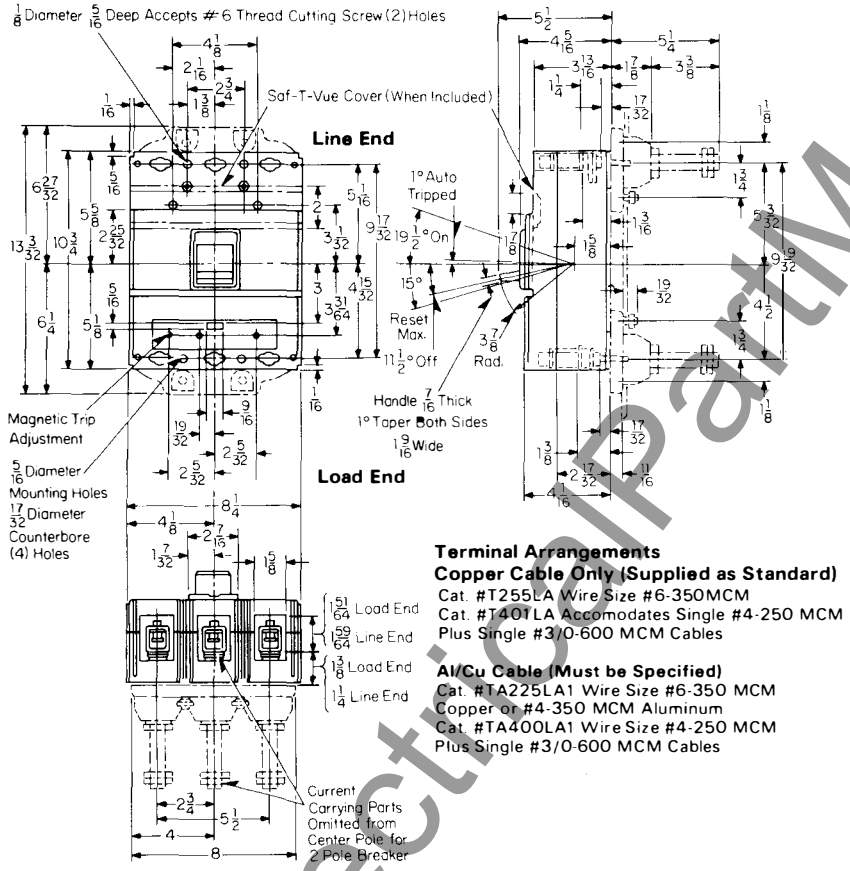

Terminal Arrangements
Copper Cable Only (Supplied as Standard)
Cat. #T255LA Wire Size #6-350MCM
Cat. #T401LA Accomodates Single #4-250 MCM
Plus Single #3/0-600 MCM Cables

Al/Cu Cable (Must be Specified)
Cat. #TA225LA1 Wire Size #6-350 MCM
Copper or #4-350 MCM Aluminum
Cat. #TA400LA1 Wire Size #4-250 MCM
Plus Single #3/0-600 MCM Cables

Rear Connected Studs
(For Non-Conductive Panels)

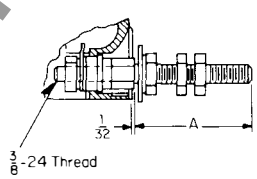

Ampere Rating	Style Number	Dimension A	Thread Size
225	1241345	3 7/32	1/2-13
225	1241346	6 9/32	1/2-13
225	1241392	4 31/32	1/2-13
400	05B7383G15	5 15/32	3/4-16
400	0587383G16	7 31/32	3/4-16
400	05B7383G17	10 15/32	3/4-16

Plug-In Adapter Kit

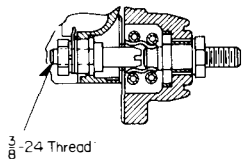

Poles	Ampere Rating	Style Number	Thread Size
2	70 to 400	313C644G25	3/4-16
3	70 to 400	313C644G26	3/4-16

Drilling Plans
For Mounting Bolts

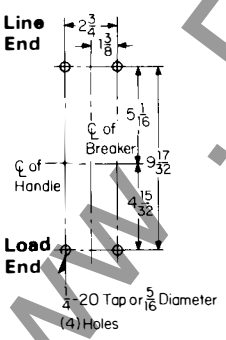

For Rear Connected Studs
(Non-Conductive Panels)

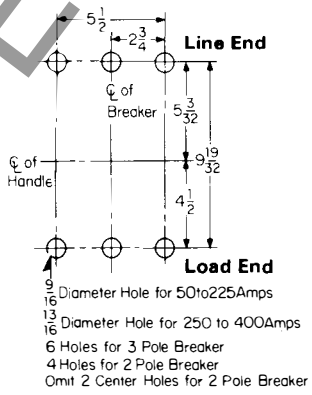

For Plug-In Block

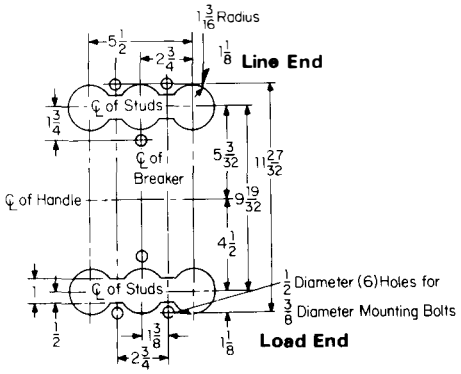

Front Cover Cutout

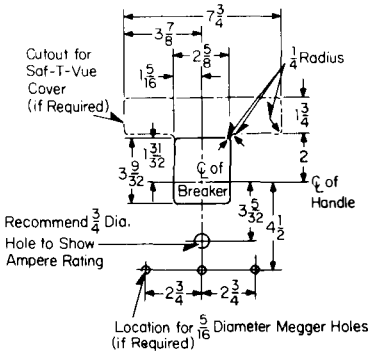

Reproduced from Drawing 455D789

www.ElectricalPartManuals.com

Type LB, LBB and MARK 75® Type HLB Breakers

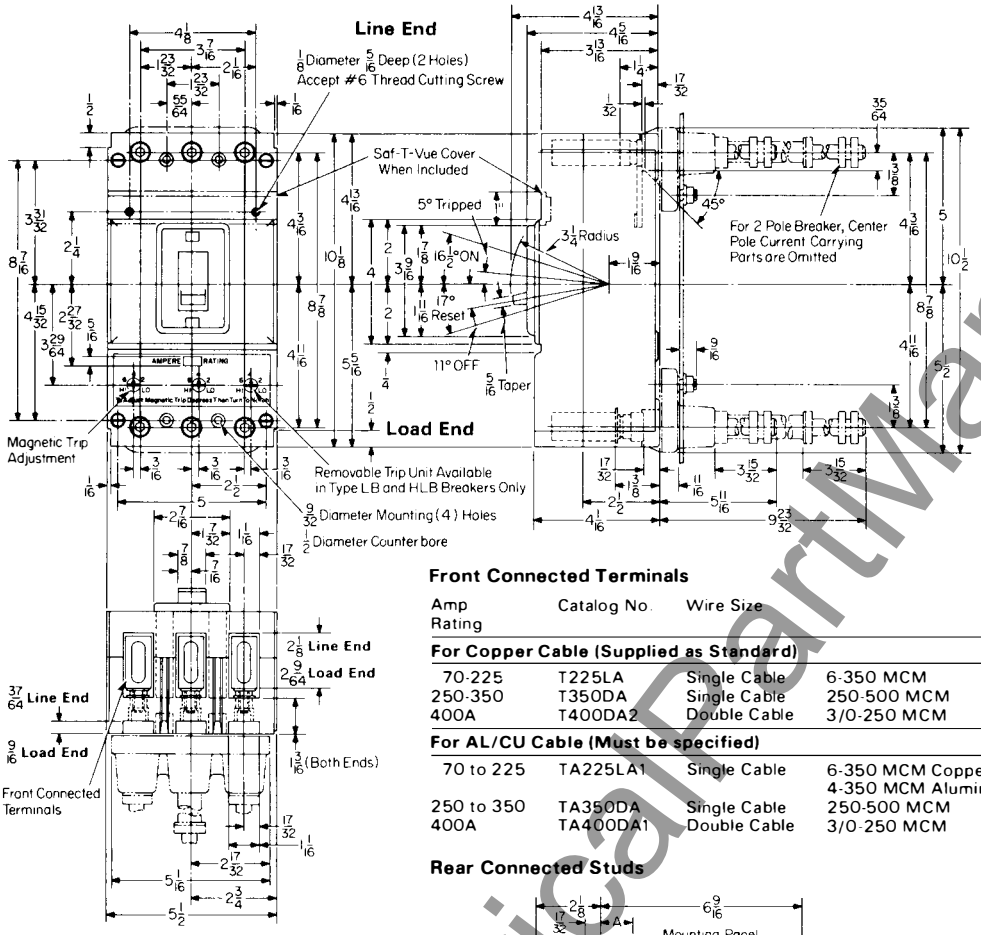

Drilling Plans For Mounting Bolts

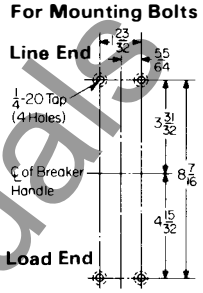

For Rear Connected Studs

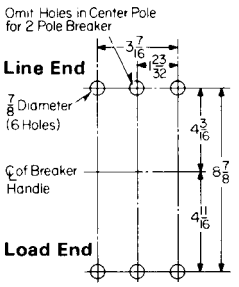

For Plug-in Block

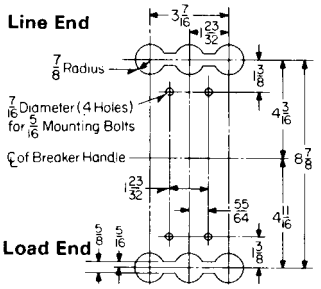

Front Cover Cutout

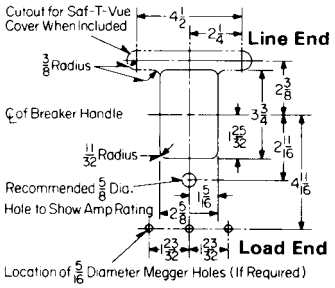

Front Connected Terminals

Amp Rating	Catalog No.	Wire Size	
For Copper Cable (Supplied as Standard)			
70-225	T225LA	Single Cable	6-350 MCM
250-350	T350DA	Single Cable	250-500 MCM
400A	T400DA2	Double Cable	3/0-250 MCM
For AL/CU Cable (Must be specified)			
70 to 225	TA225LA1	Single Cable	6-350 MCM Copper or 4-350 MCM Aluminum
250 to 350	TA350DA	Single Cable	250-500 MCM
400A	TA400DA1	Double Cable	3/0-250 MCM

Rear Connected Studs

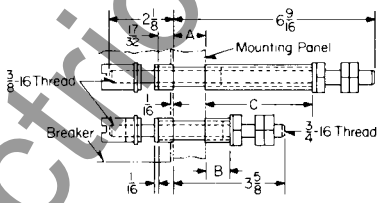

Stud Ampere Rating	Stud Style Number	Panel Thickness A	Tube length B	Tube length C	Tube Style Number
400A-short	656D565G03	3/4 to 1	2 7/32		313C909H17
400A-long	656D565G04	3/4 to 1		3 25/32	313C909H20
400A-short	656D565G03	1/2 to 3/4	1 3/32		313C909H18
400A-long	656D565G04	1/2 to 3/4		4 1/32	313C909H21
400A-short	656D565G03	1/4 to 1/2	1 11/32		313C909H19
400A-long	656D565G04	1/4 to 1/2		4 9/32	313C909H22

Stud complete consists of one stud assembly and one tube as per chart

Plug-In Adapter Kit

Poles	Ampere Rating	Kit Style Number	Thread Size
2	250-400	313C644G45	3/4-16
3	250-400	313C644G46	3/4-16

Reproduced From Drawing 5680D06

Westinghouse Electric Corporation
Low Voltage Breaker Division
Beaver, Pennsylvania 15009

Printed in U.S.A.

www.ElectricalPartManuals.com

October, 1977
Supersedes Dimension Sheet 29-170
all previous issues.
Mailed to: E, D, C/1901, 1928, 1929/PL

Type LC and MARK 75® Type HLC
SELTRONIC™ Circuit Breakers

Page 31: Types LC-150, LC-300, MARK 75®
Types HLC-150, HLC-300
Page 32: Types LC-600, MARK 75® HLC-600

AB DE-ION® Circuit Breakers

Type LC-150, LC-300, MARK 75® Type HLC-150, HLC-300 Breakers

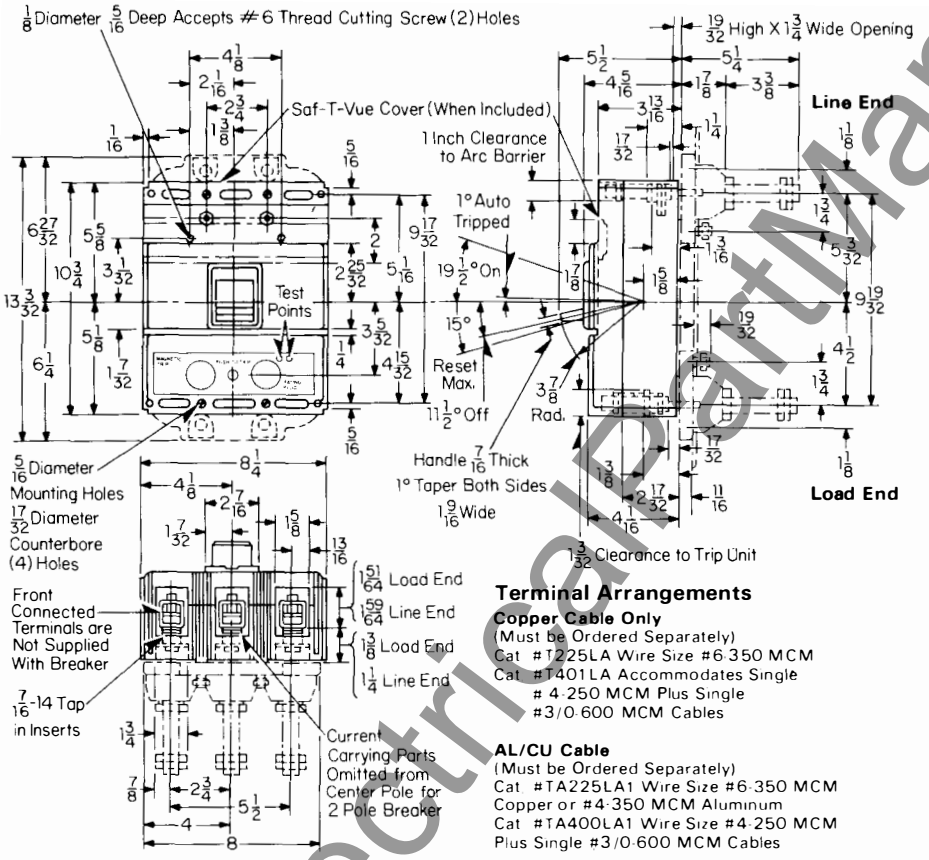

Terminal Arrangements

Copper Cable Only
(Must be Ordered Separately)
Cat #T225LA Wire Size #6-350 MCM
Cat #T401LA Accommodates Single
4-250 MCM Plus Single
#3/0-600 MCM Cables

AL/CU Cable
(Must be Ordered Separately)
Cat #TA225LA1 Wire Size #6-350 MCM
Copper or #4-350 MCM Aluminum
Cat #TA400LA1 Wire Size #4-250 MCM
Plus Single #3/0-600 MCM Cables

Rear Connected Studs
(For Non-Conductive Panels)

Do Not Use More Than 25 Ft. Lbs. Torque to Tighten Nuts

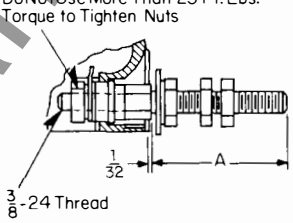

Maximum Ampere Rating	Style Number	Dimension A	Thread Size
225	1241345	3 7/32	1/2 - 13
225	1241346	6 9/32	1/2 - 13
225	1241392	4 31/32	1/2 - 13
300	05B7383G15	5 15/32	3/4 - 16
300	05B7383G16	7 31/32	3/4 - 16
300	05B7383G17	10 15/32	3/4 - 16

Plug-In Adapter Kit

Do Not Use More Than 25 Ft. Lbs. Torque to Tighten Nuts

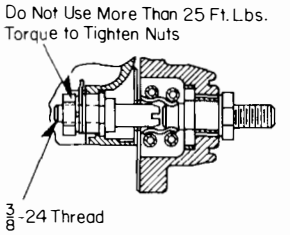

Poles	Ampere Rating	Style Number	Thread Size
2	75 to 300	313C644G25	3/4 - 16
3	75 to 300	313C644G26	3/4 - 16

Drilling Plans
For Mounting Bolts

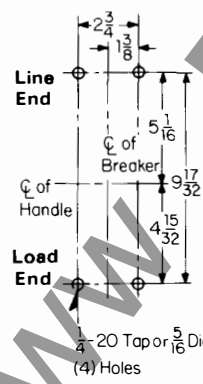

For Rear Connected Studs
(Non-Conductive Panels)

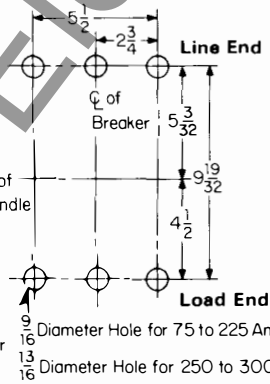

For Plug-in Block

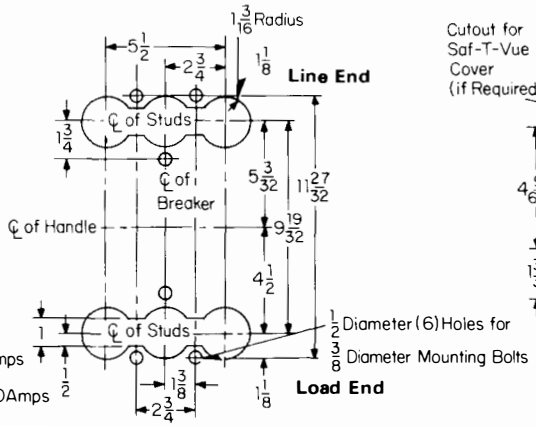

Front Cover Cutout

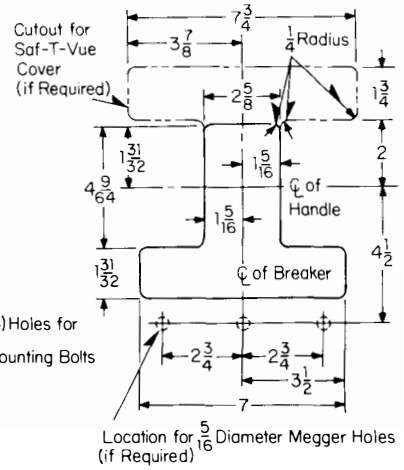

Reproduced From Drawing 2608D93

www.ElectricalPartManuals.com

Type LC-600, MARK 75® Type HLC-600 Breakers

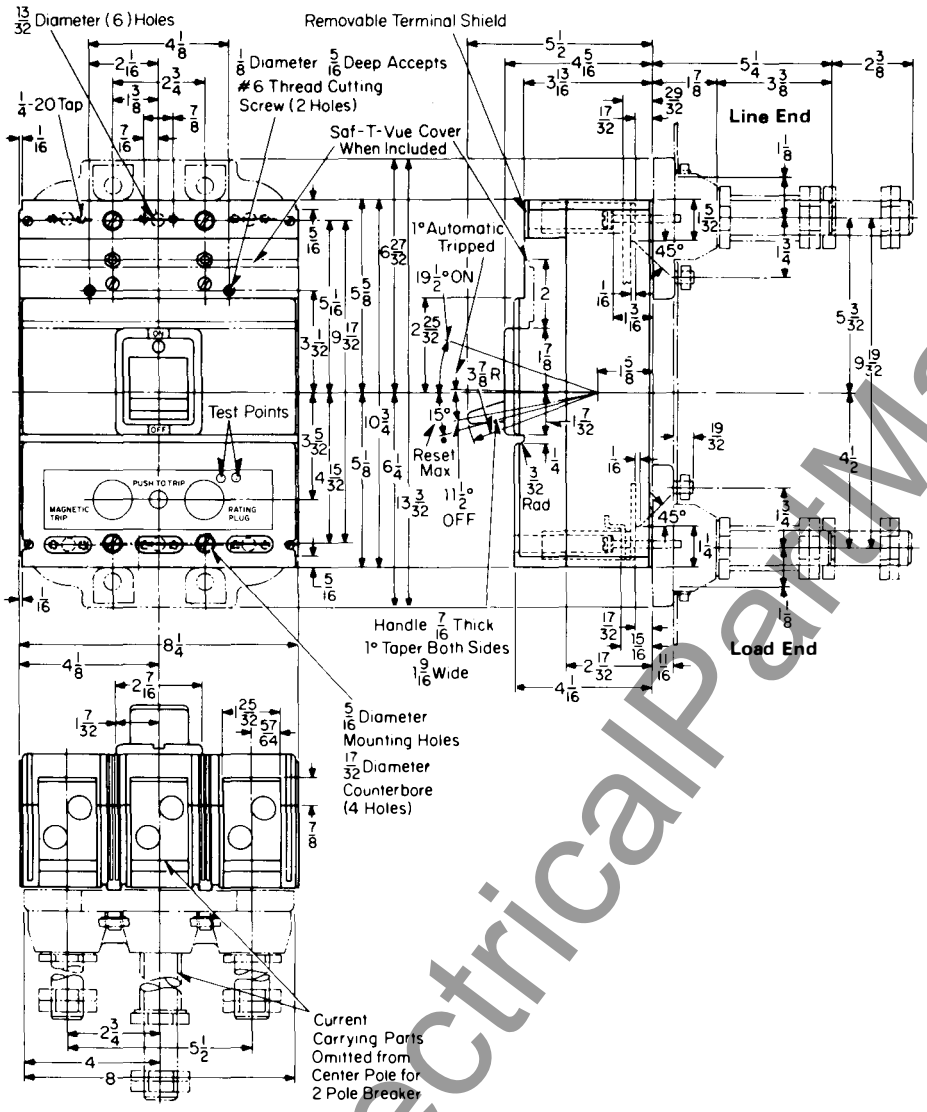

Rear Connected Studs

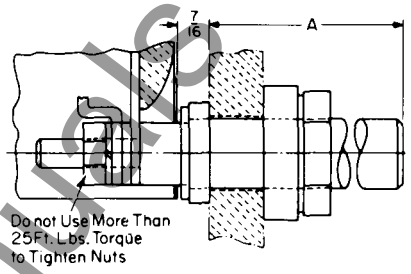

Ampere Rating	Style Number	Thread Size	Dimension A
300 to 600	314C960G07	1 - 12	5 15/32
300 to 600	314C960G08	1 - 12	7 3/32
300 to 600	314C960G09	1 - 12	10 15/32

Plug-In-Adapter Kit

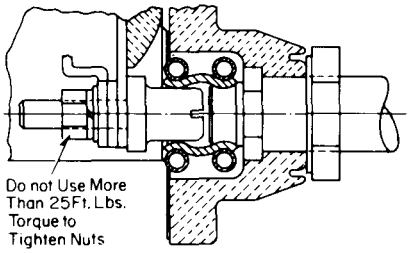

Poles	Ampere Rating	Style Number	Thread Size
2	300 to 600	313C644G50	1 - 12
3	300 to 600	313C644G51	1 - 12

Terminal Arrangements

Copper Cable Only
(Must be Ordered Separately)
Cat. #T600LA Wire Size (2) 250-500 MCM

Optional AL/CU Cable
(Must be Ordered Separately)
Cat. #TA600LA Wire Size (2) 250-500 MCM

Drilling Plans

For Mounting Bolts
(Front Connected Terminals)

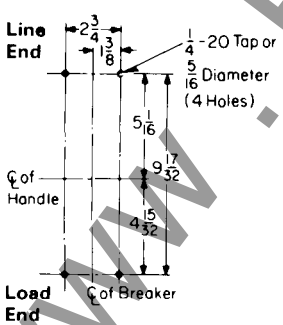

For Rear Connected Studs
(Insulated Panel)

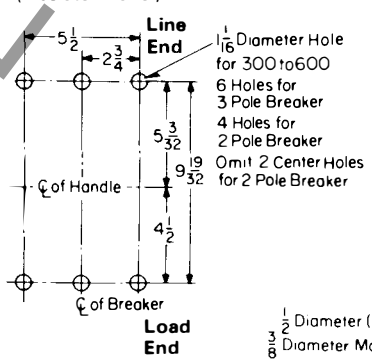

For Plug-in Block

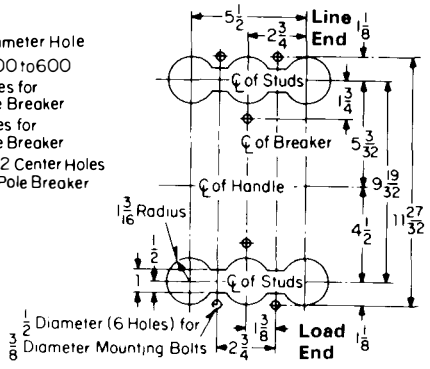

Front Cover Cutout

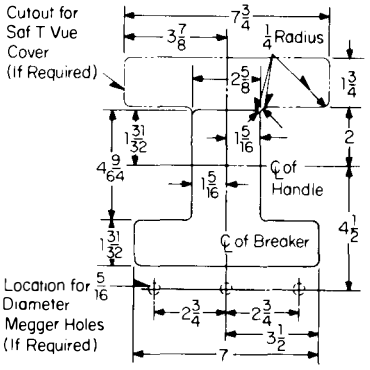

Reproduced From Drawing 2608D92

Printed in U.S.A.

www.ElectricalPartManuals.com

October, 1977
Supersedes Dimension Sheet 29-170
all previous issues.
Mailed to: E, D, C/1901, 1928, 1929/PL

Page 31: Types LA and MARK 75® Type HLA 600 Amperes
Page 32: Types MA and MARK 75® Type HMA 800 Amperes

AB DE-ION® Circuit Breakers

Type LA and MARK 75® Type HLA Breakers

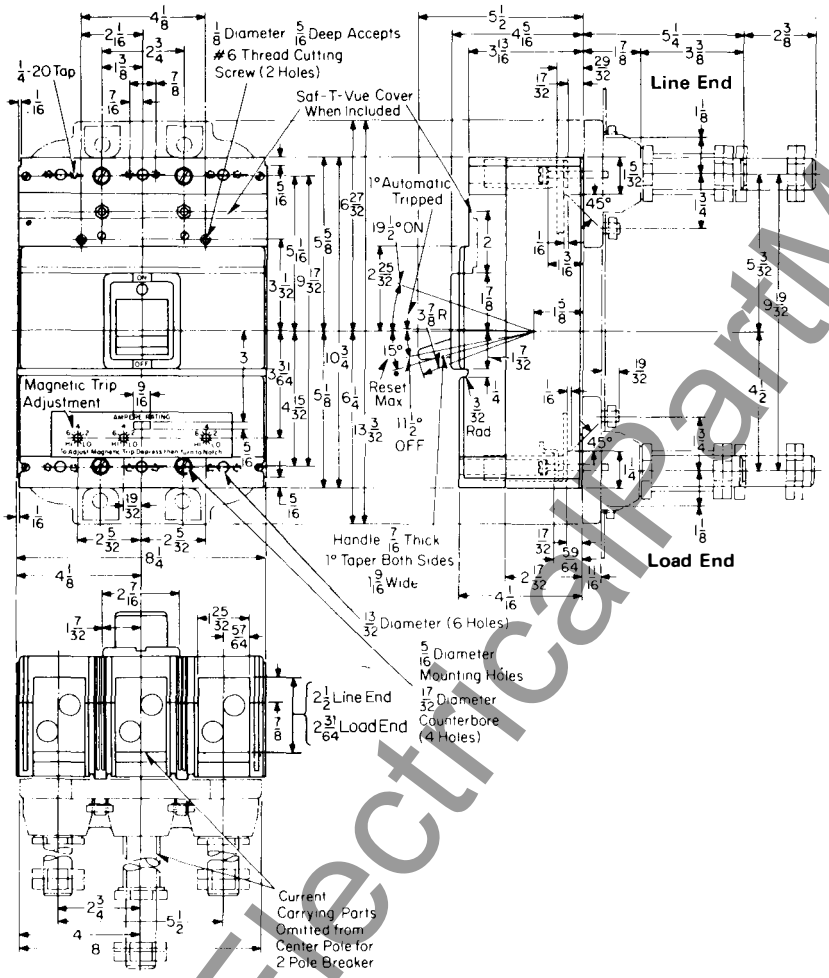

Rear Connected Studs

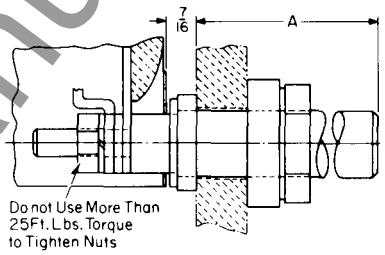

Ampere Rating	Style Number	Thread Size	Dimension A
250 to 600	314C960G07	1 - 12	5 15/32
250 to 600	314C960G08	1 - 12	7 31/32
250 to 600	314C960G09	1 - 12	10 15/32

Plug-In-Adapter Kit

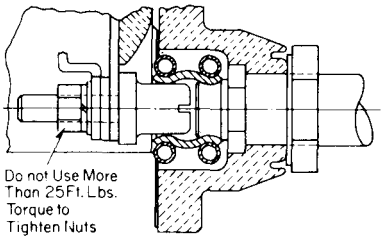

Poles	Ampere Rating	Style Number	Thread Size
2	250 to 600	313C644G50	1 - 12
3	250 to 600	313C644G51	1 - 12

Terminal Arrangements

Copper Cable Only (Supplied as Standard)
Cat. #T600LA Wire Size (2) 250-500 MCM

AL/CU Cable (Must be Specified)
Cat. #TA600LA Wire Size (2) 250-500 MCM

Drilling Plans

For Mounting Bolts

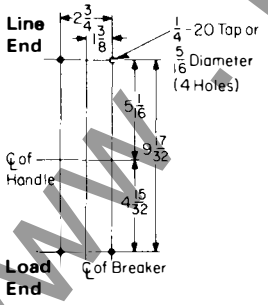

For Rear Connected Studs (Insulated Panel)

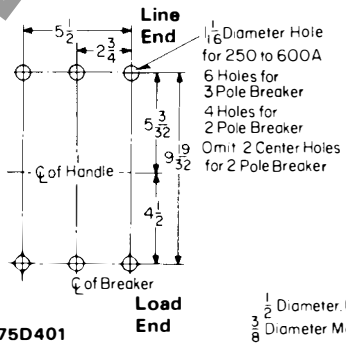

For Plug-in Block

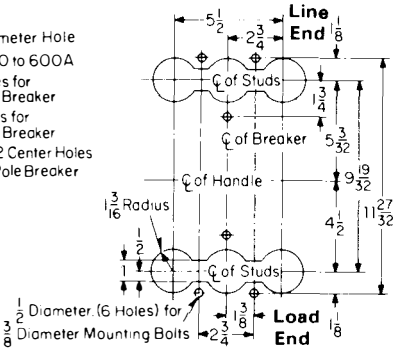

Front Cover Cutout

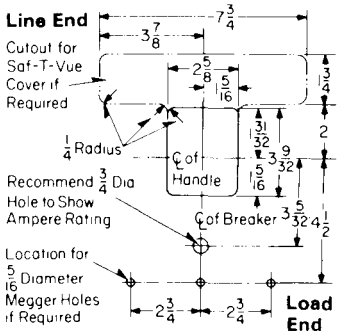

Reproduced From Drawing 375D401

www.ElectricalPartManuals.com

Type MA and MARK 75® Type HMA Breakers

Terminal Arrangements

For Use With Copper Cable Only (Supplied As Standard)

Cable	Catalog No.	Ampere Rating	Wire Size
Single	T350MA	125-350	#1-600 MCM
Double	T600MA1	400-600	2/0-500 MCM
Triple	T800MA1	700-800	3/0-300 MCM

For Use With Al/Cu Cable (Must Be Specified)

Double	TA700MA1	125-600	#1-500 MCM
Triple	TA800MA2	700-800	3/0-400 MCM

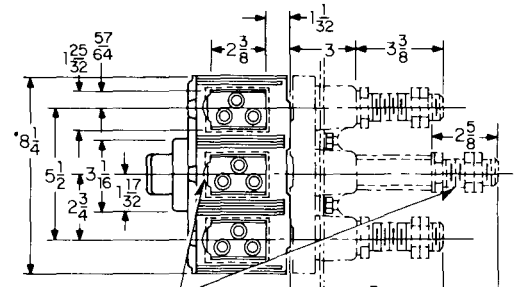

Rear Connected Studs

Stud Ampere Rating	Stud Style Number	Thread Size	Dimension A
125-225	314C960G01	1/2-13	3 21/32
250-400	314C960G04	3/4-16	5 29/32
250-400	314C960G05	3/4-16	8 13/32
250-400	314C960G06	3/4-16	10 29/32
450-600	314C960G07	1-12	5 29/32
450-600	314C960G08	1-12	8 13/32
450-600	314C960G09	1-12	10 29/32
700-800	314C960G10	1 1/8-12	5 29/32
700-800	314C960G11	1 1/8-12	8 13/32
700-800	314C960G12	1 1/8-12	10 29/32

Rear Connected Studs—2 Required Per Pole (Not Supplied With Breaker)

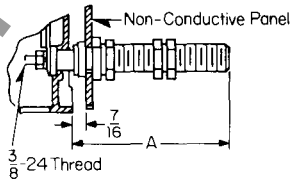

Plug-In Adapter Kit

Poles	Ampere Rating	Kit Style Number	Thread Size	Fig.
2	125-600	313C644G27	1 1/8-12	1
3	125-600	313C644G28	1 1/8-12	1
2	700-800	176C544G01	1 1/8-12	2
3	700-800	176C544G02	1 1/8-12	2

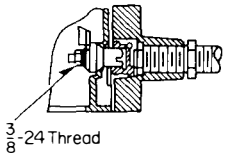

Figure 1 (Plug-In Type)

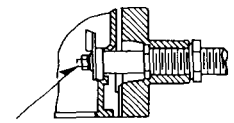

Figure 2 (Front Removable Bolted Type)

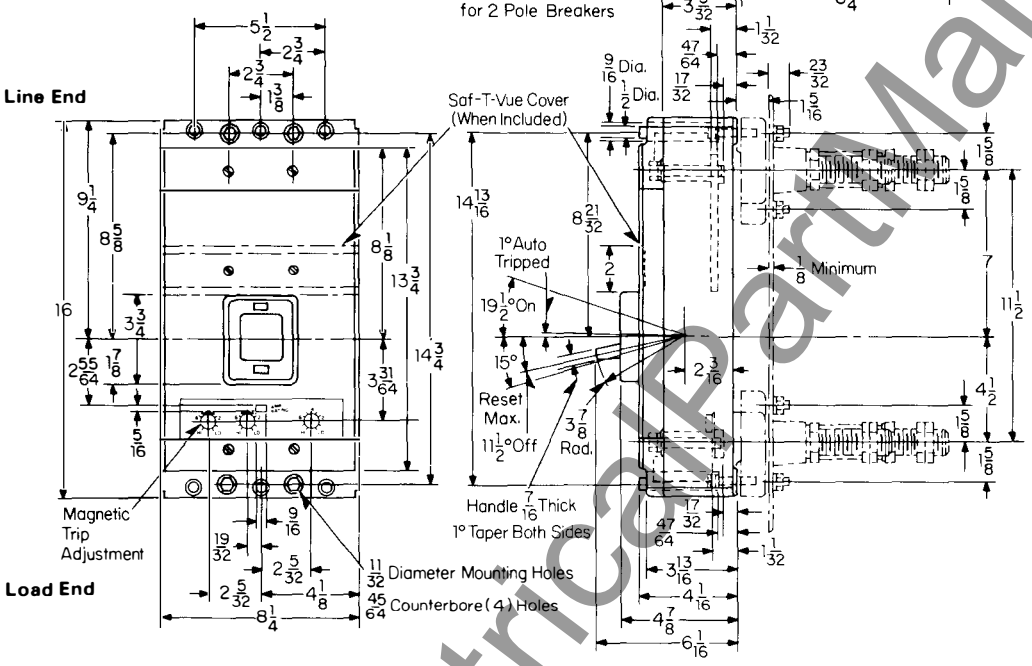

Drilling Plans

For Plug-In Block

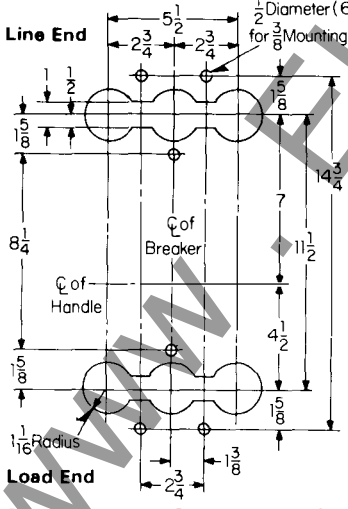

Rear Connected Studs (For Non-Conductive Panels)

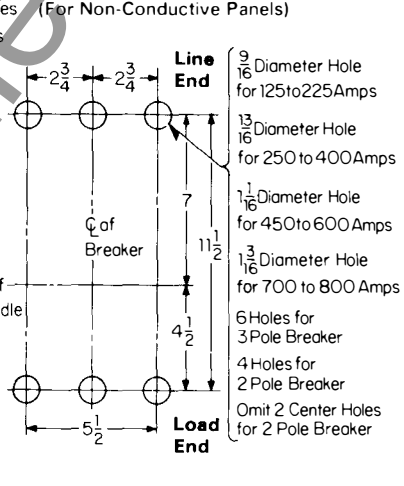

For Mounting Bolts

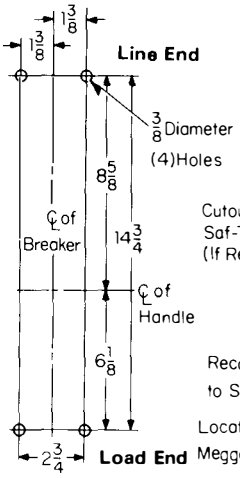

Front Cover Cutout

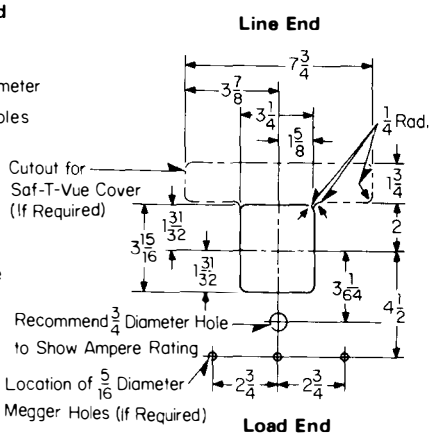

Reproduced From Drawing 457D265

www.ElectricalPartManuals.com

Printed in U.S.A.

October, 1977
Supersedes Dimension Sheet 29-170
all previous issues.
Mailed to: E, D, C/1901, 1928, 1929/PL

Page 33: Types MC, MCG, MARK 75®
Types HMC, HMCG 800 Ampere
SELTRONIC™ Circuit Breakers

Page 34: Types NC, NCG, MARK 75®
Types HNC, HNCG 1200 Ampere
SELTRONIC™ Breakers

AB DE-ION® Circuit Breakers

Type MC, MCG, MARK 75® Type HMC, HMCG Breakers

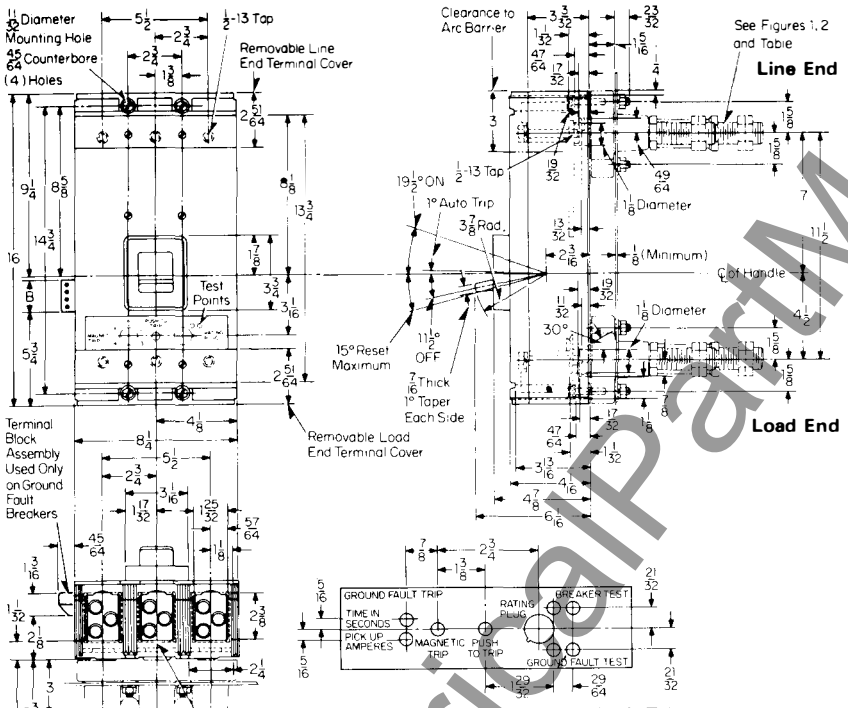

Nameplate (Used with Ground Fault Trip)

	B
2 Terminal Unit	13/16
4 Terminal Unit	1 9/16

Front Connected Terminals
(Must be Ordered Separately)

Amp Rating	Catalog No.	Wire Size Number of Cables
For Copper Cable		
600	T600MA1	(2) 2/0-500MCM
800	T800MA1	(3) 3/0-300MCM
For AL/CU Cable		
600	TA700MA1	(2) #1-500MCM
800	TA800MA2	(3) 3/0-400MCM

Rear Connected Studs
2 Required Per Pole (Not Supplied With Breaker)

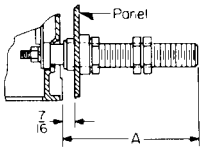

Stud Ampere Rating	Stud Style Number	Thread Size	Dimension A
250-400	314C960G04	¾-16	5 29/32
250-400	314C960G05	¾-16	8 13/32
250-400	314C960G06	¾-16	10 29/32
450-600	314C960G07	1-12	5 29/32
450-600	314C960G08	1-12	8 13/32
450-600	314C960G09	1-12	10 29/32
700-800	314C960G10	1⅛-12	5 29/32
700-800	314C960G11	1⅛-12	8 13/32
700-800	314C960G12	1⅛-12	10 29/32

Plug-In Adapter Kit
1 Kit Per Breaker (Not Supplied With Breaker)

Poles	Ampere Rating	Kit Style Number	Thread Size	Fig
2	125-600	313C644G27	1⅛-12	1
3	125-600	313C644G28	1⅛-12	1
2	700-800	176C544G01	1⅛-12	2
3	700-800	176C544G02	1⅛-12	2

Figure 1

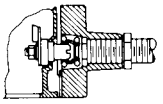

Figure 2

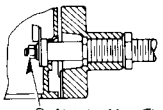

Do Not Use More Than 25Ft. Lbs. Torque to Tighten Nuts

Drilling Plans For Mounting Bolts
(Front Connected Terminals)

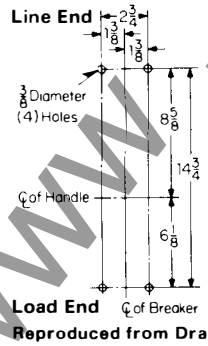

Reproduced from Drawing 2605D21

For Rear Connected Studs

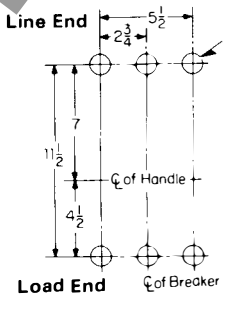

For Plug-In Adapter Kit

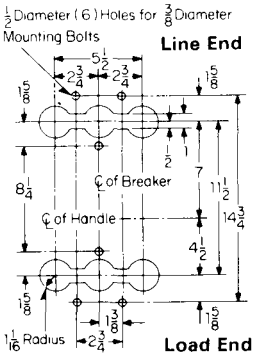

Front Cover Cutout

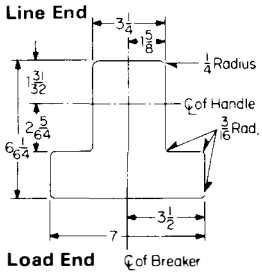

www.ElectricalPartManuals.com

Type NC, NCG, MARK 75® Type HNC, HNCG Breakers

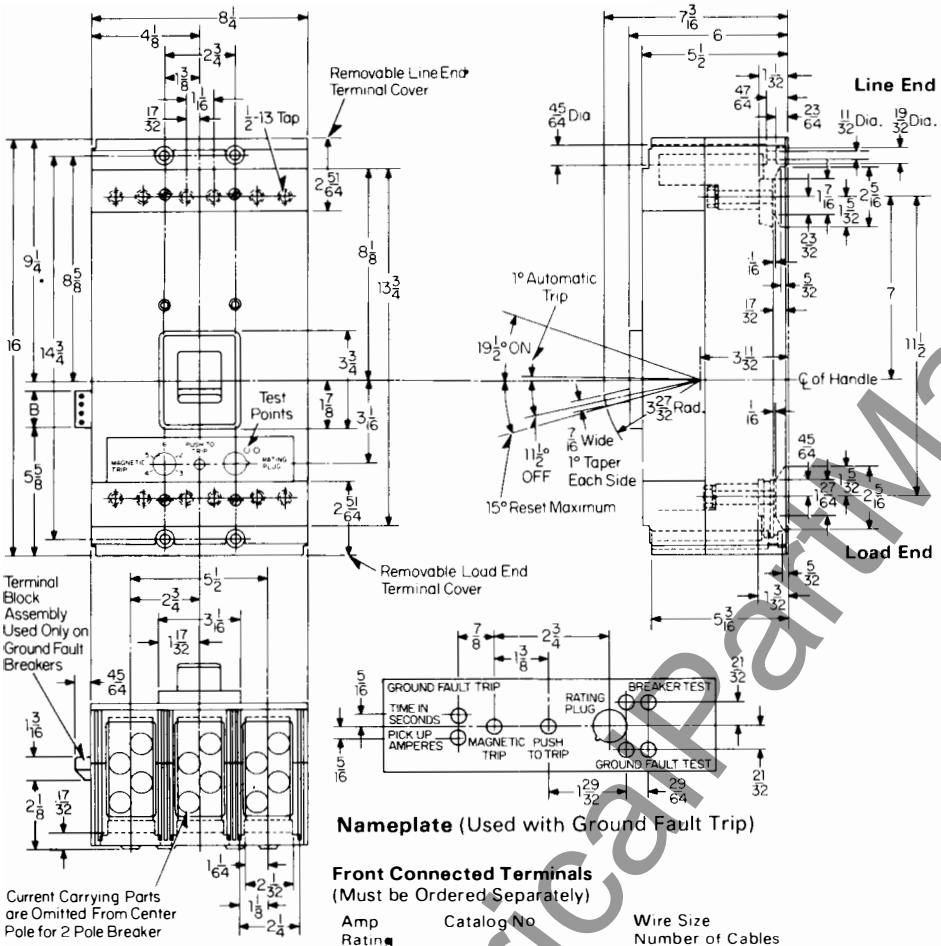

	B
2 Terminal Unit	13/16
4 Terminal Unit	1 9/16

Nameplate (Used with Ground Fault Trip)

Bolted Rear Connected Studs For 700-800 Amps

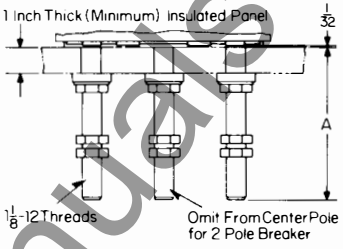

Style No.	A
623B222G01	5 1/2
623B222G02	8
623B222G03	10 1/2

For 900-1200 Amps Only

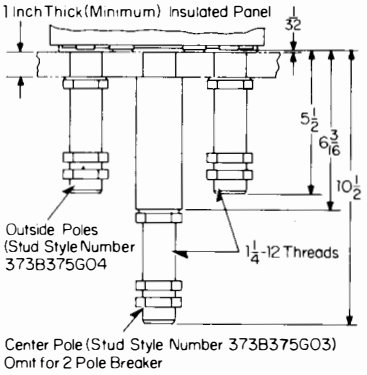

Front Connected Terminals
(Must be Ordered Separately)

Amp Rating	Catalog No	Wire Size Number of Cables
For Copper Cable		
600	T700NB1	(2) 2/0-500MCM
1000	T1000NB1	(3) 3/0-500MCM
1200	T1200NB1	(4) 3/0-400MCM
For AL/CU Cable		
600	TA700NB1	(2)#1-500MCM
1000	TA1000NB1	(3) 3/0-400MCM
1200	TA1201NB1	(3) 500-750MCM
1200	TA1200NB1	(4) 4/0-500MCM

Drilling Plans

For Mounting Bolts

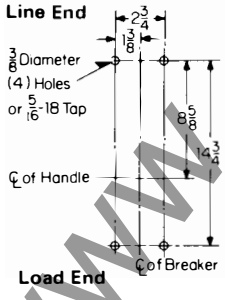

For Rear Connected Studs
(Insulated Panel)

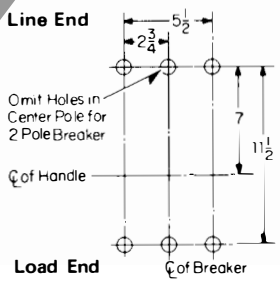

Amp Rating	Hole Dia
700-800	1 3/16
900-1200	1 5/16

Front Cover Cutout

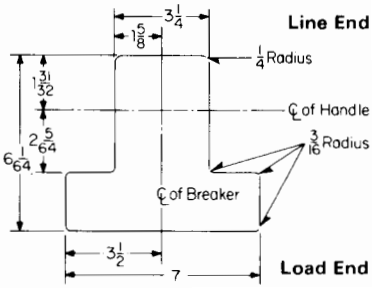

Reproduced from Drawing 2605D23

Printed in U.S.A.

www.ElectricalPartManuals.com

October, 1977
Supersedes Dimension Sheet 29-170
all previous issues.
Mailed to: E, D, C/1901, 1928, 1929/PL

Type NB and MARK 75® Type HNB

Page 35: Type NB, MARK 75® Type HNB
Page 36: Mounting Block for Type NB, MARK 75 HNB, SELTRONIC™ Types NC, MARK 75 HNC

AB DE-ION® Circuit Breakers

Type NB, MARK 75® Type HNB Breakers

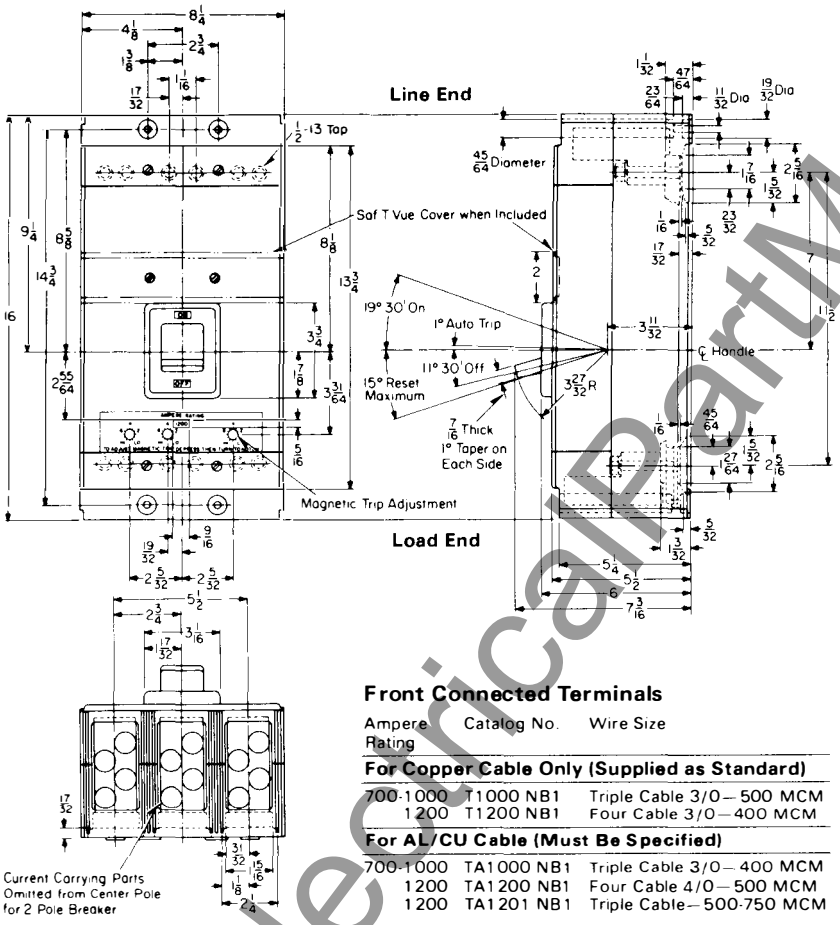

Bolted Rear Connected Studs

For 700 to 800 Amps

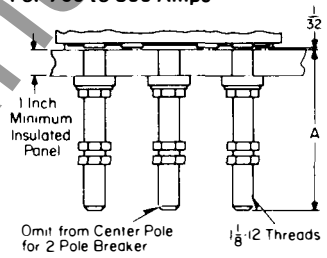

Style No.	A
623B222G01	5½
623B222G02	B
623B222G03	10½

For 900 to 1200 Amps Only

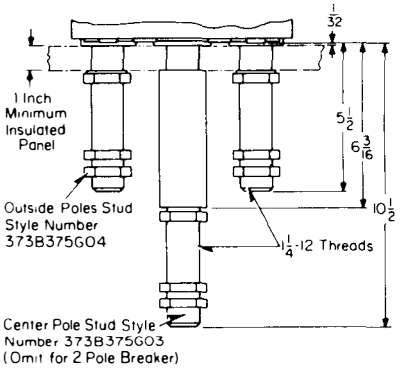

Front Connected Terminals

Ampere Rating	Catalog No.	Wire Size
For Copper Cable Only (Supplied as Standard)		
700-1000	T1000 NB1	Triple Cable 3/0—500 MCM
1200	T1200 NB1	Four Cable 3/0—400 MCM
For AL/CU Cable (Must Be Specified)		
700-1000	TA1000 NB1	Triple Cable 3/0—400 MCM
1200	TA1200 NB1	Four Cable 4/0—500 MCM
1200	TA1201 NB1	Triple Cable—500-750 MCM

Drilling Plans

For Mounting Bolts
(Front Connected Terminals)

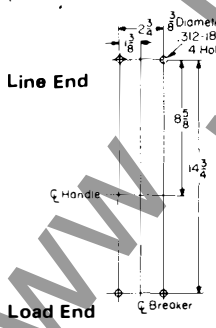

For Rear Connected Studs
(Insulated Panel)

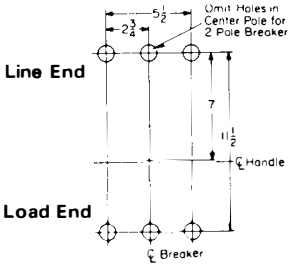

Style No.	A
623B222G01	5½
623B222G02	B
623B222G03	10½

Front Cover Cutout

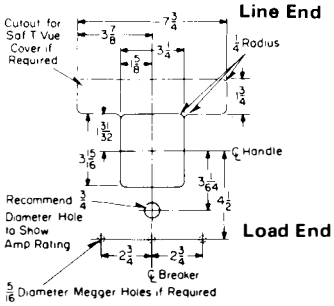

Reproduced From Drawing 371D578

www.ElectricalPartManuals.com

Mounting Block for Type NB, NC, MARK 75® Type HNB, HNC Breakers

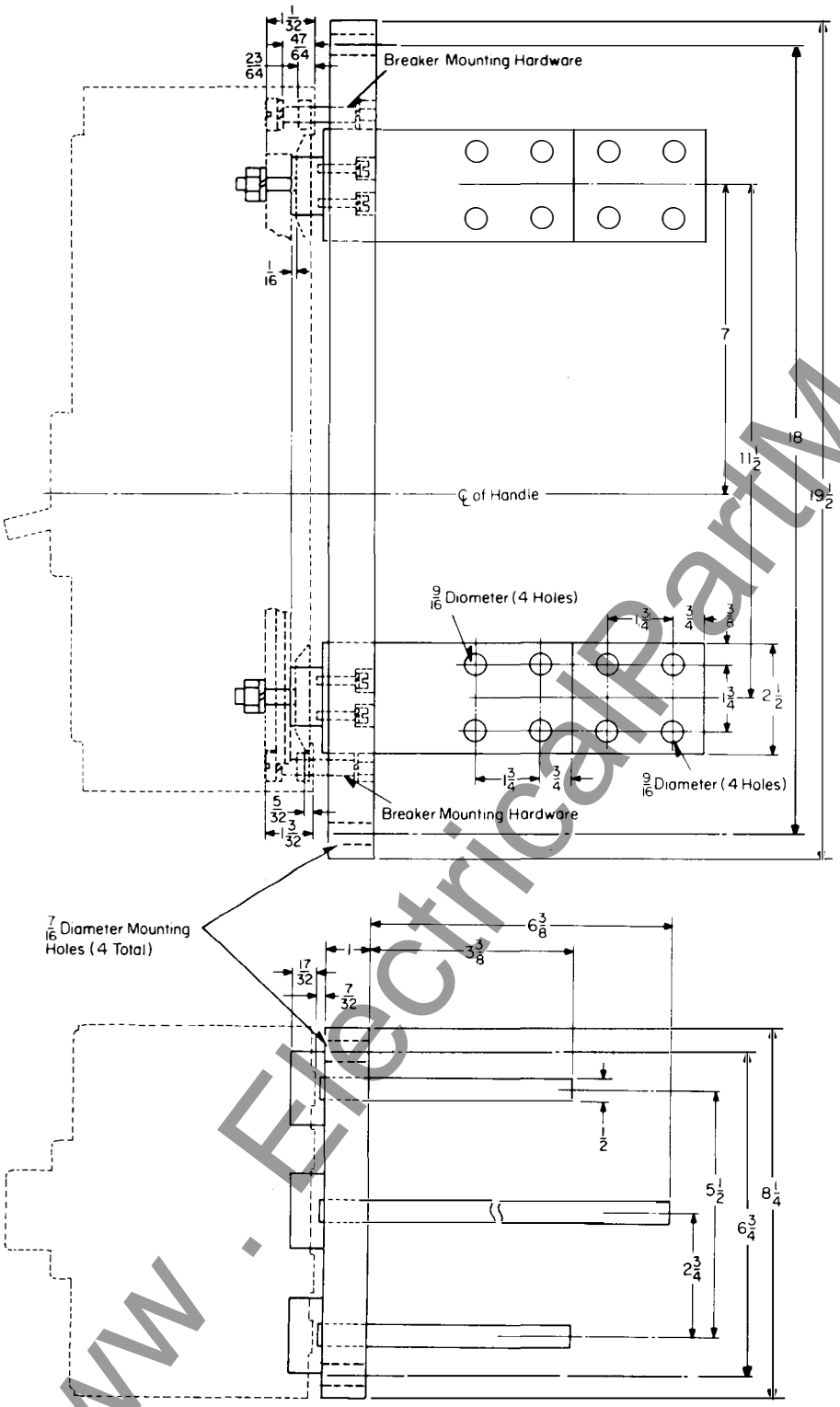

Reproduced From Drawing 4990D37

Printed in U.S.A.

www . ElectricalPartManuals . com

October, 1977
Supersedes Dimension Sheet 29-170
all previous issues.
Mailed to: E, D, C/1901, 1928, 1929/PL

Type PB 2000 Ampere Circuit Breakers

Page 37: Type PB Rear Connected
Page 38: Type PBF Front Connected

AB DE-ION® Circuit Breakers

Type PB Rear Connected Breaker

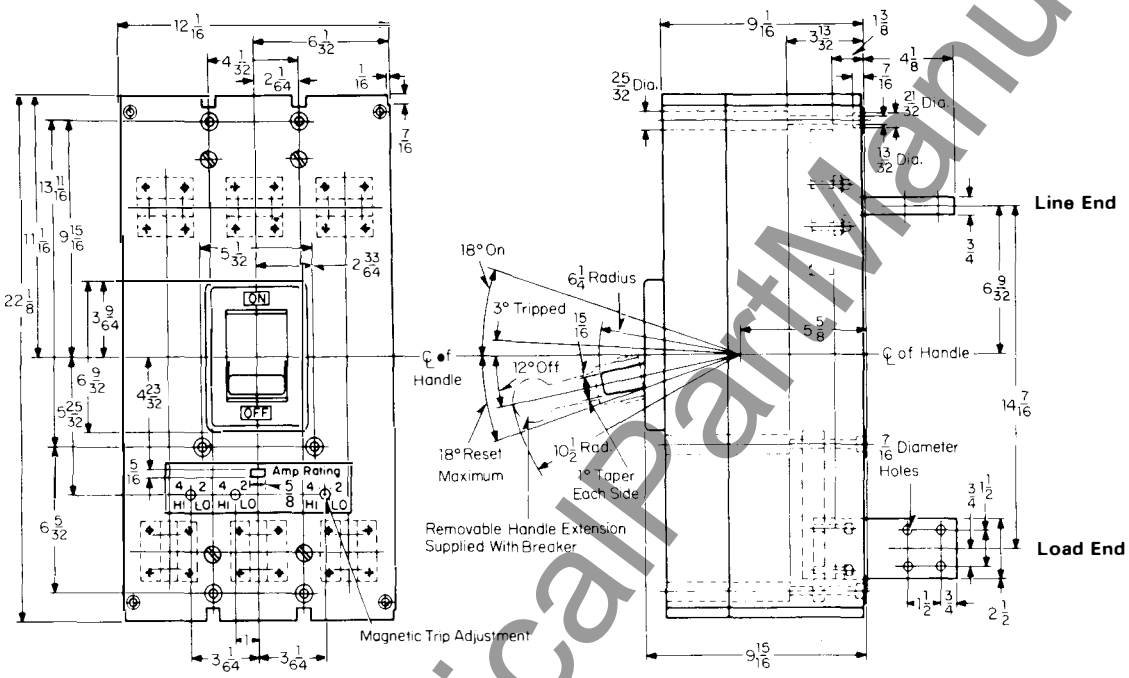

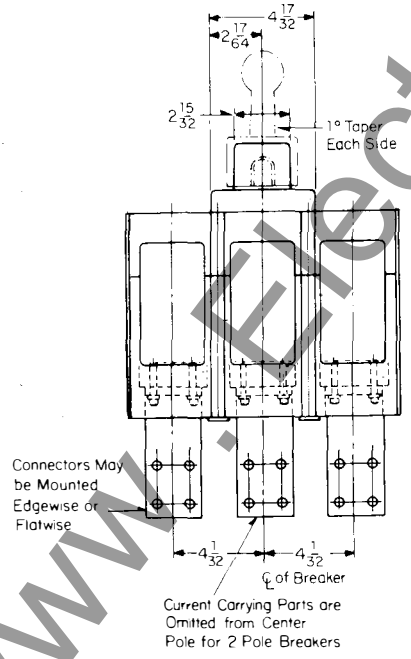

Drilling Plans
For Mounting Bolts

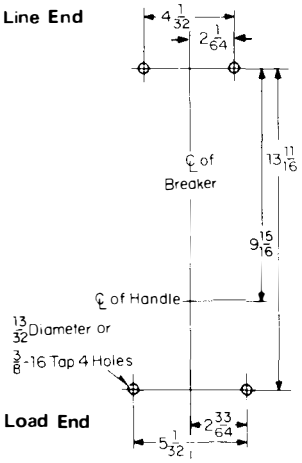

Front Cover Cutout

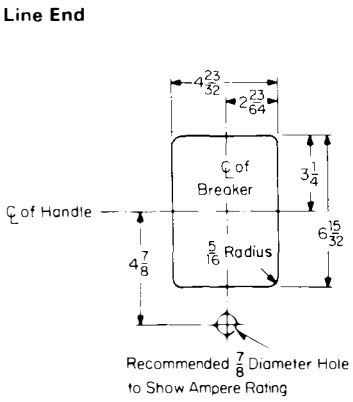

Reproduced From Drawing 654D460

www.ElectricalPartManuals.com

Type PBF Front Connected Breaker

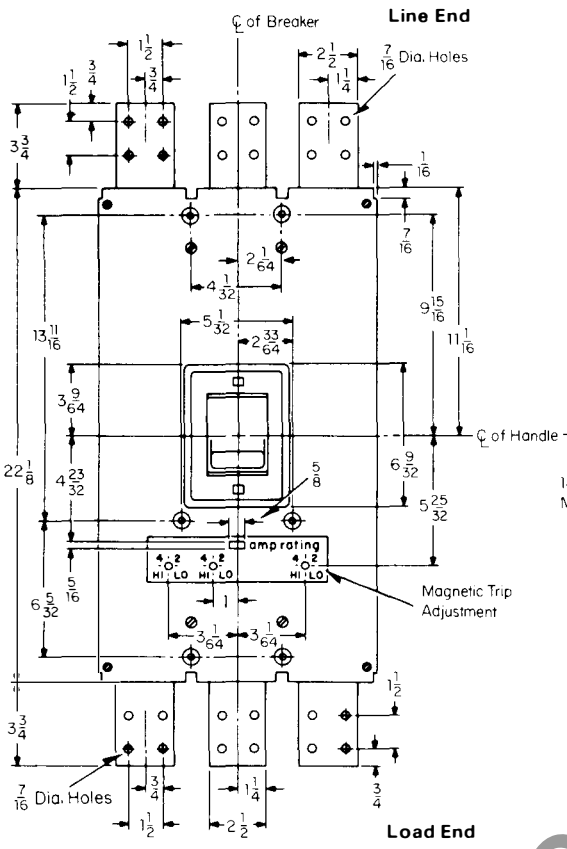

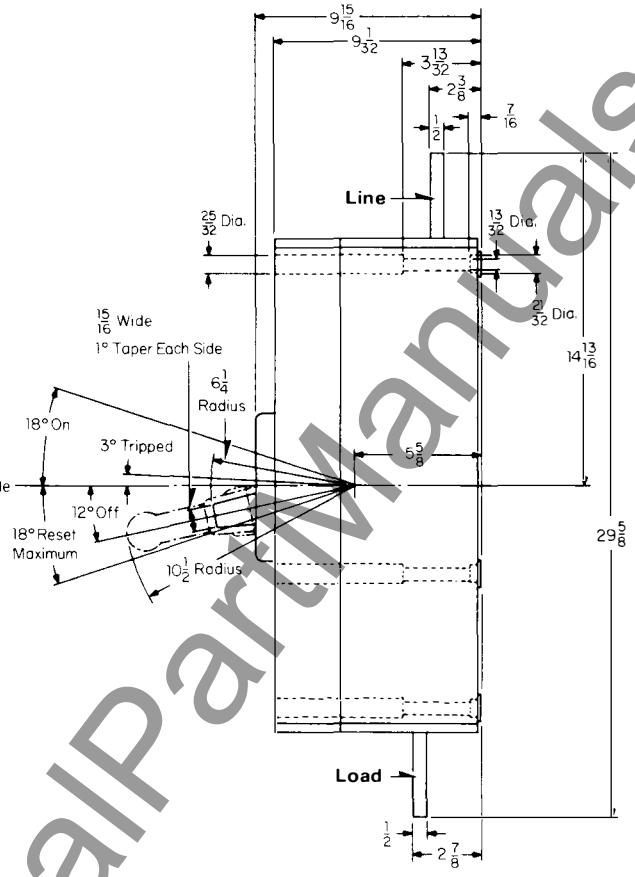

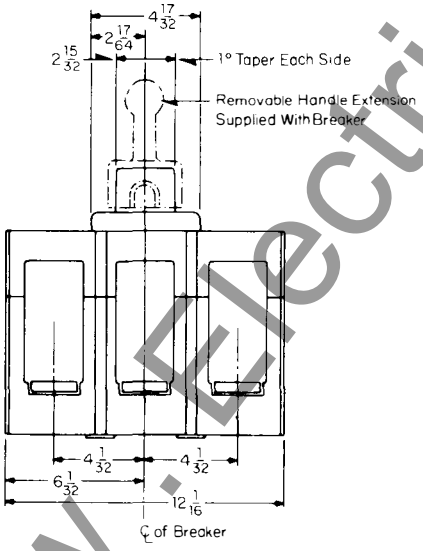

Drilling Plan

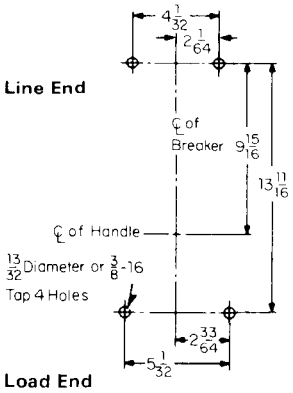

Front Cover Cutout

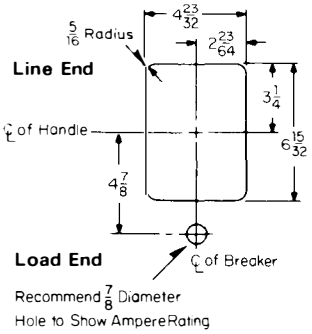

Reproduced From Drawing 375D565

Printed in U.S.A.

www.ElectricalPartManuals.com

October, 1977
Supersedes Dimension Sheet 29-170
all previous issues.
Mailed to: E, D, C/1901, 1928, 1929/PL

Types PC, PCC SELTRONIC™ Circuit Breakers

Page 41: 2000 and 2500 Amperes
Page 42: 3000 Amperes

AB DE-ION® Circuit Breakers

Type PC, PCC 2000 and 2500 Rear Connected Breakers

	A
2 Terminal Unit	$1\frac{3}{16}$
4 Terminal Unit	$1\frac{9}{16}$

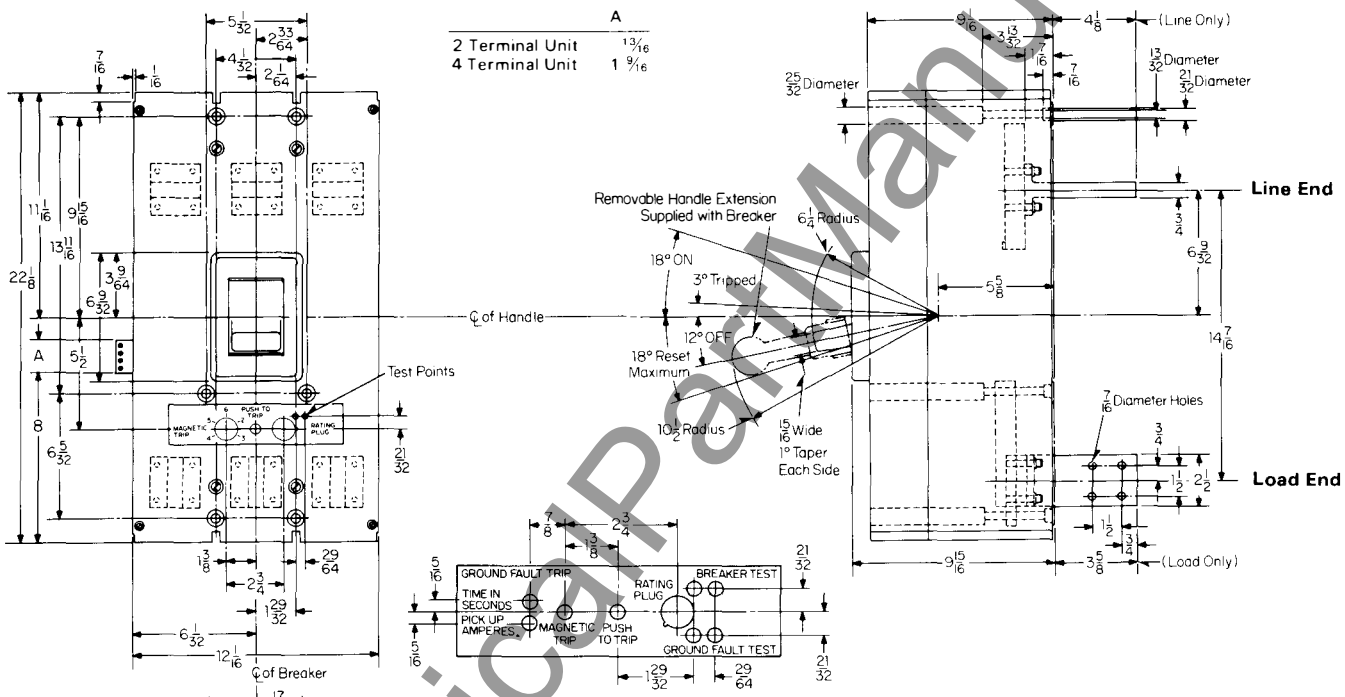

Nameplate (Used with Ground Fault Trip)

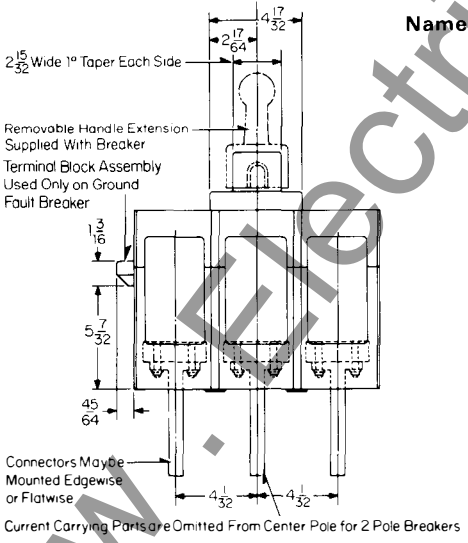

Drilling Plan
For Mounting Bolts

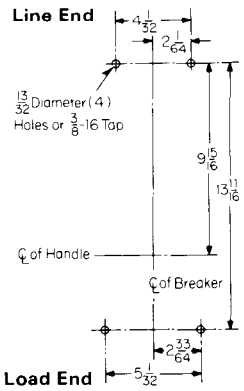

Front Cover Cutout

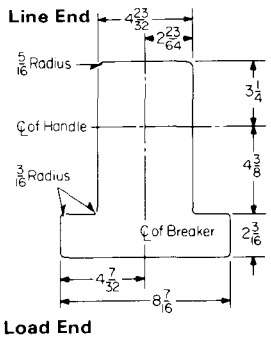

Reproduced from Drawing 2606D79

www.ElectricalPartManuals.com

Type PC, PCC 3000 Rear Connected Breakers

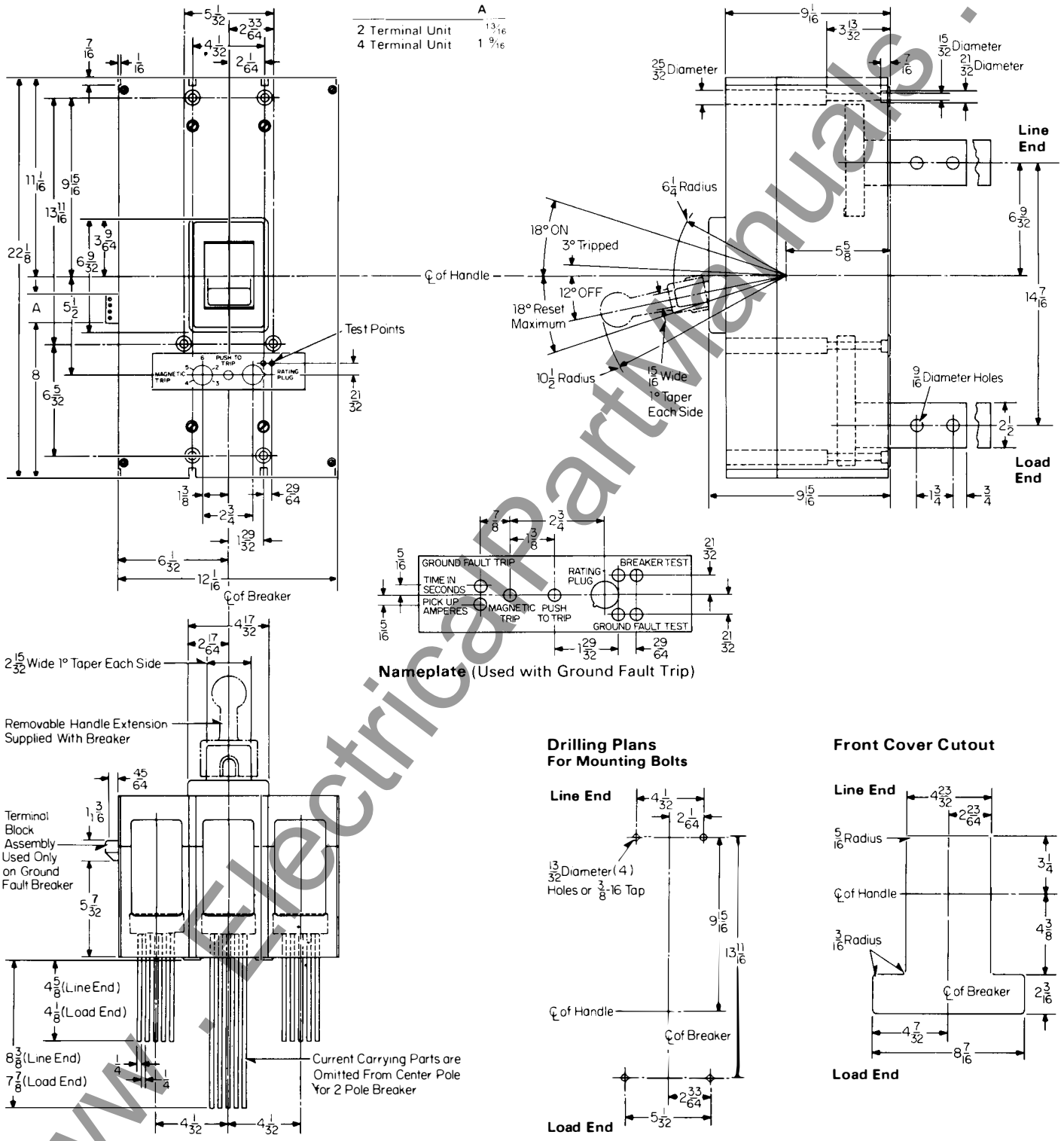

Nameplate (Used with Ground Fault Trip)

Drilling Plans
For Mounting Bolts

Front Cover Cutout

Reproduced from Drawing 2606D80

Printed in U.S.A.

www.ElectricalPartManuals.com

October, 1977
Supersedes Dimension Sheet 29-170
all previous issues.
Mailed to: E, D, C/1901, 1928, 1929/PL

Page 39: Type PB 2000 Ampere Fuse Mounting Base
Page 40: Type PB 2500 and 3000 Ampere Rear Connected

AB DE-ION® Circuit Breakers

Fuse Mounting Base for Type PB 2000 Breaker

Standard Back Connection

Breaker Dimension Reference:
Front Connection Drawing 375D565
Back Connection Drawing 654D460

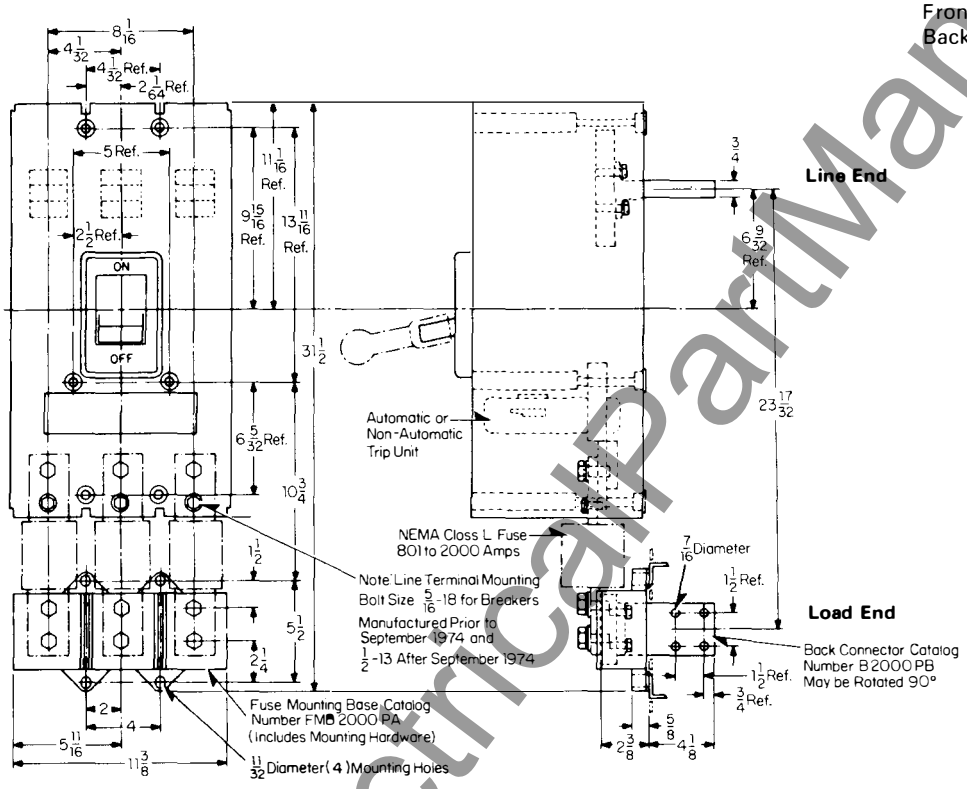

Direct Bus Connection

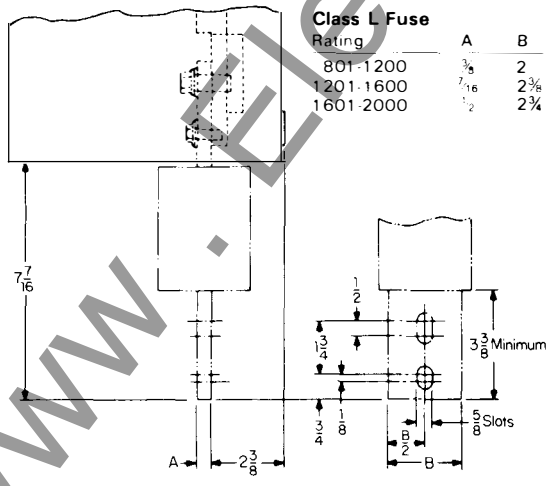

Class L Fuse

Rating	A	B
801-1200	3/8	2
1201-1600	7/16	2 3/8
1601-2000	1/2	2 3/4

Cable Connection

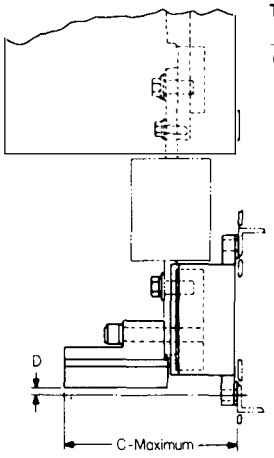

Terminals

Style No.	Wire Range	C Max	D
672B655G01	3/0-400 MCM Triple Cable	5 17/32	5/8
180C046G03	400-500 MCM 4 Cables	6 3/4	9/32

Reproduced From Drawing 4975D99

www.ElectricalPartManuals.com

Type PB 2500, PB 3000 Rear Connected Breakers

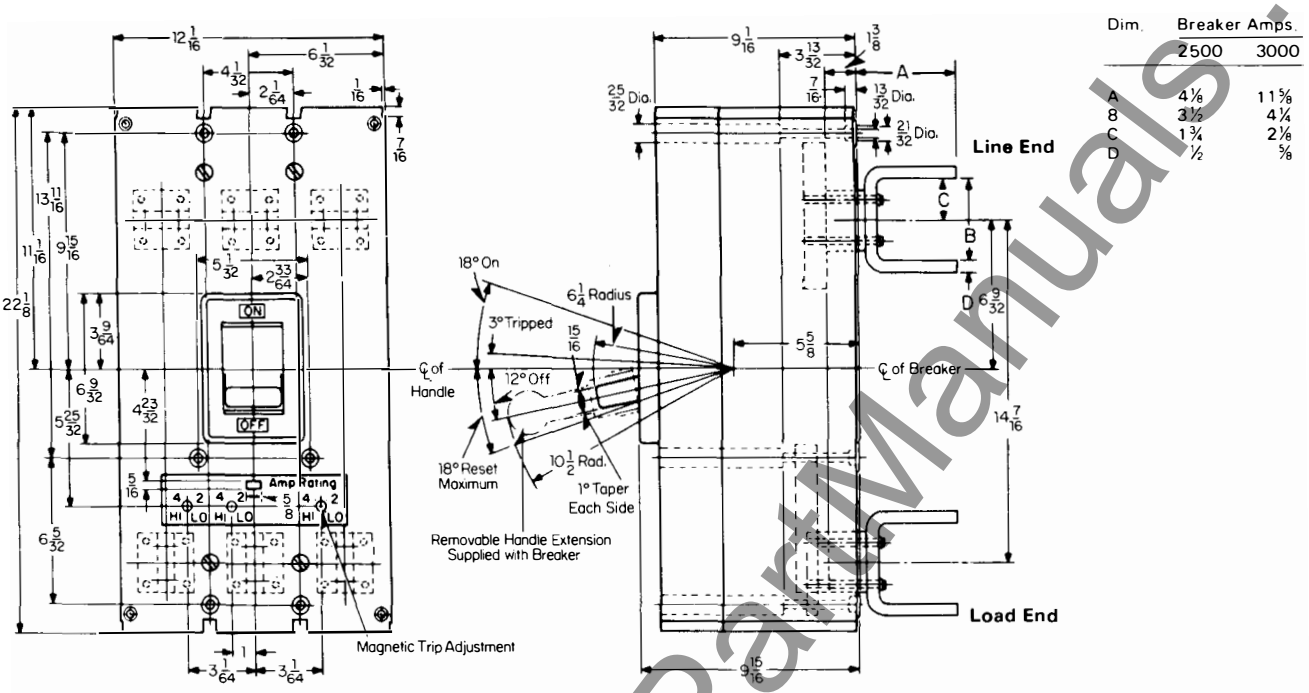

Dim.	Breaker Amps. 2500	3000
A	4 1/8	11 5/8
B	3 1/2	4 1/4
C	1 3/4	2 1/8
D	1/2	5/8

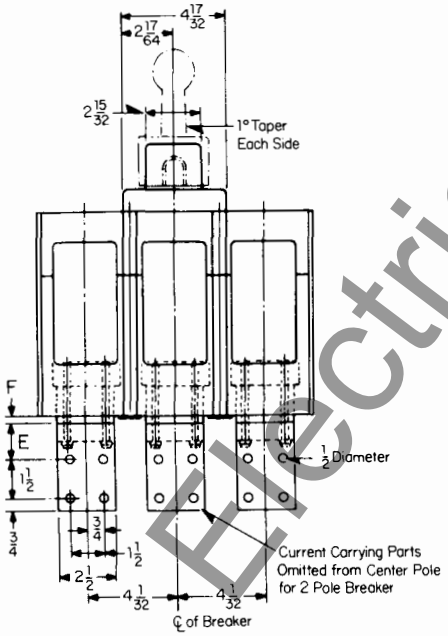

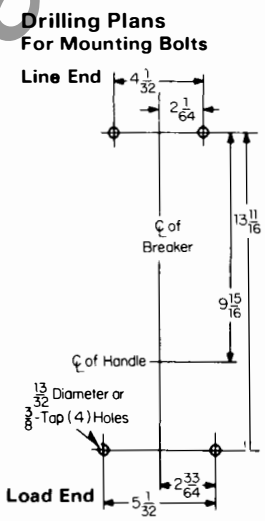

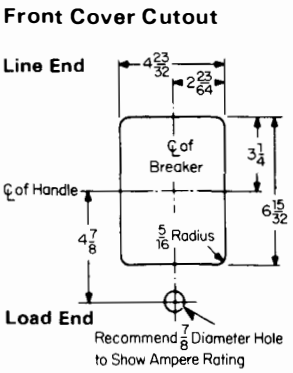

Dim.	Breaker Amps. 2500	3000
E	1 3/4	5 3/4
F	1/8	3 5/8

Reproduced From Drawing 4981D40

Printed in U.S.A.

www.ElectricalPartManuals.com

October, 1977
Supersedes Dimension Sheet 29-170
all previous issues.
Mailed to: E, D, C/1901, 1928, 1929/PL

SELTRONIC™ Circuit Breakers

Page 43: Types PCF, PCCF, PCFG, PCCFG, 2000 and 2500 Amp Front Connected
Page 44: Ground Fault Indicator kit

AB DE-ION® Circuit Breakers

Type PCF, PCCF, PCFG, PCCFG 2000, 2500 Breakers

Rating	A	B	C
2000 Amp	2½	1¼	½
2500 Amp	3	1½	1

	D
2 Terminal Unit	1 3/16
4 Terminal Unit	1 9/16

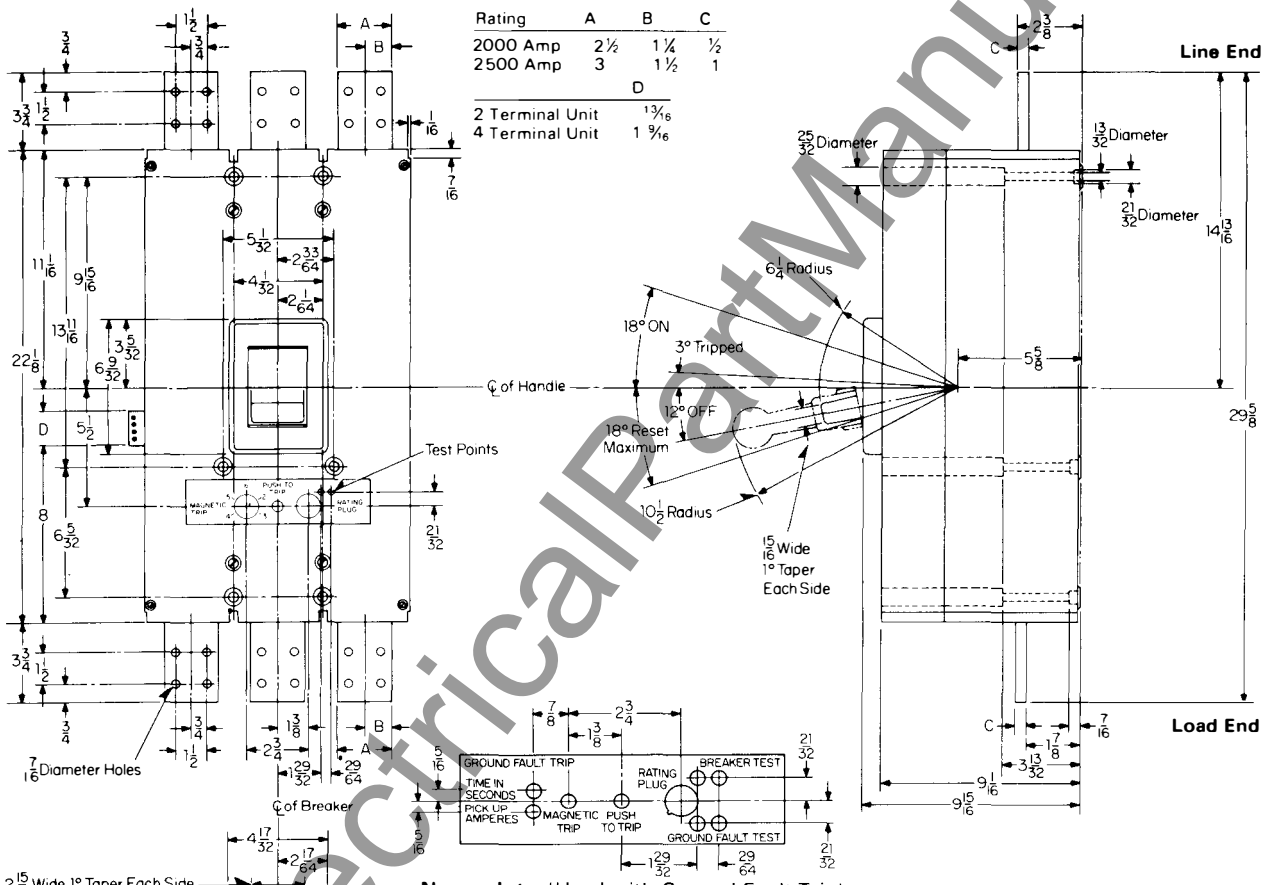

Nameplate (Used with Ground Fault Trip)

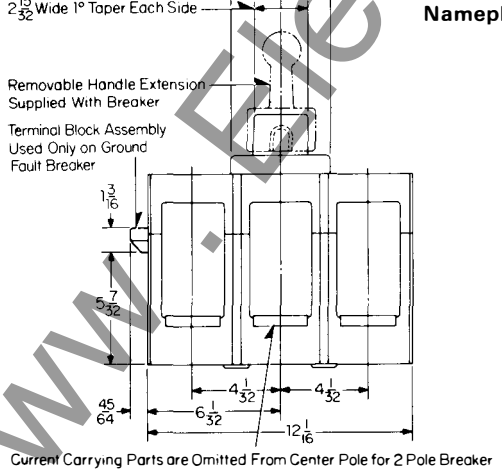

Drilling Plans
For Mounting Bolts

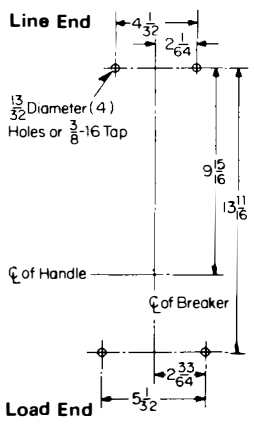

Front Cover Cutout

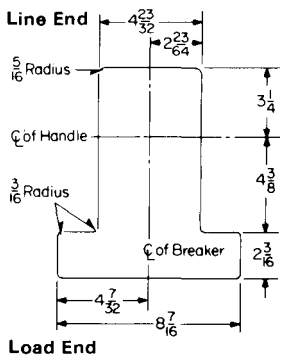

Reproduced from Drawing 2605D27

www.ElectricalPartManuals.com

Ground Fault Indicator Kit for SELTRONIC™ Breakers

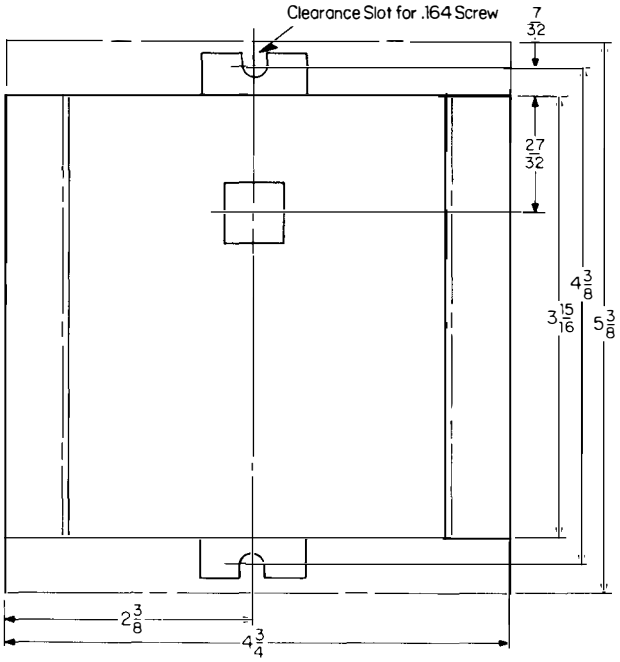

Drilling Plan and Cutout
For Face Mounting Bracket

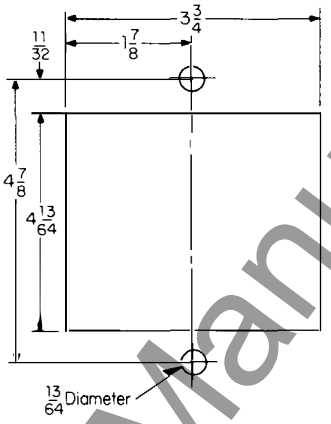

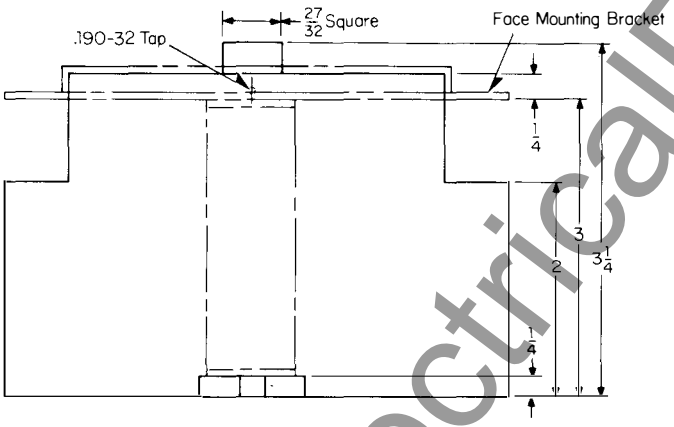

Reproduced From Drawing 750B870

Westinghouse Electric Corporation
Low Voltage Breaker Division
Beaver, Pennsylvania 15009

Printed in U.S.A.

www.ElectricalPartManuals.com

October, 1977
Supersedes Dimension Sheet 29-170
all previous issues.
Mailed to: E, D, C/1901, 1928, 1929/PL

External (Fourth) Current Monitor
Used with SELTRONIC™ Breakers with
Built-in Ground Fault Protection

AB DE-ION® Circuit Breakers

MCG and HMCG Breakers

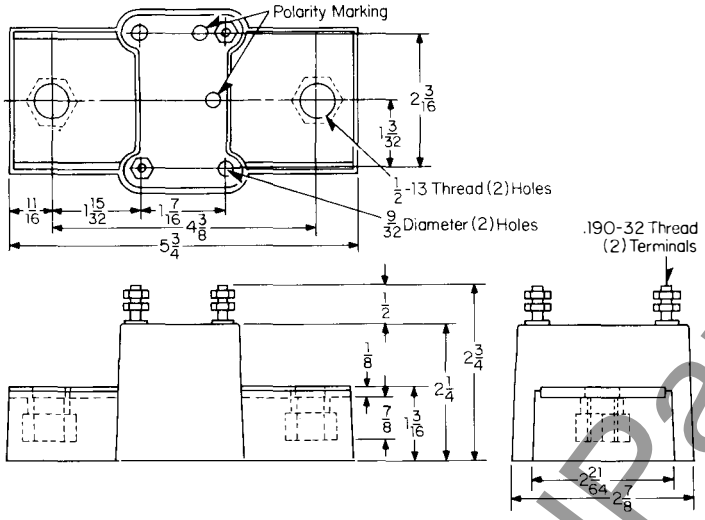

PCG, PCCG, PCFG and PCCFG Breakers

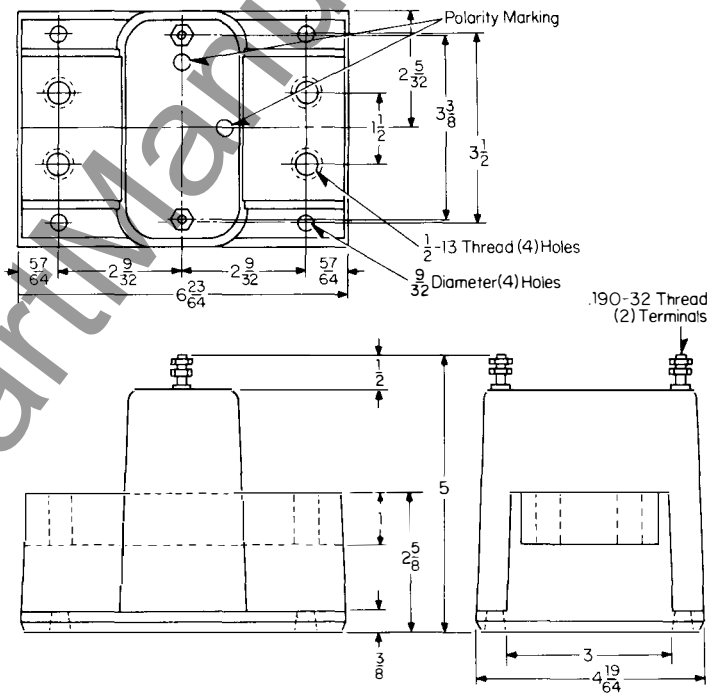

NCG and HNCG Breakers

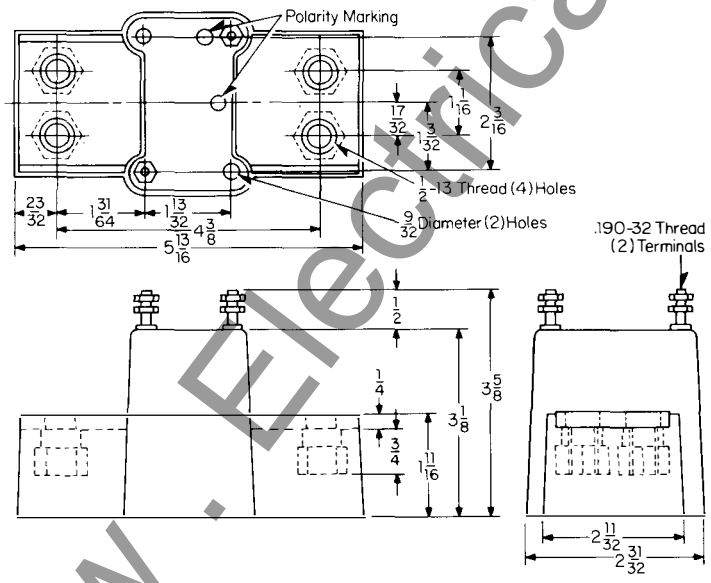

Reproduced From Drawings 1265C88, 1265C89 and 1265C90

www . ElectricalPartManuals . com

www . ElectricalPartManuals . com

Printed in U.S.A.

Westinghouse Electric Corporation
Low Voltage Breaker Division
Beaver, Pennsylvania 15009

October, 1977
Supersedes Dimension Sheet 29-170
all previous issues.
Mailed to: E, D, C/1901, 1928, 1929/PL

Type FB and LA TRI-PAC® Circuit Breakers

Page 47: Type FB TRI-PAC Breaker
Page 48: Type LA TRI-PAC Breaker

AB DE-ION® Circuit Breakers

Type FB TRI-PAC Breaker

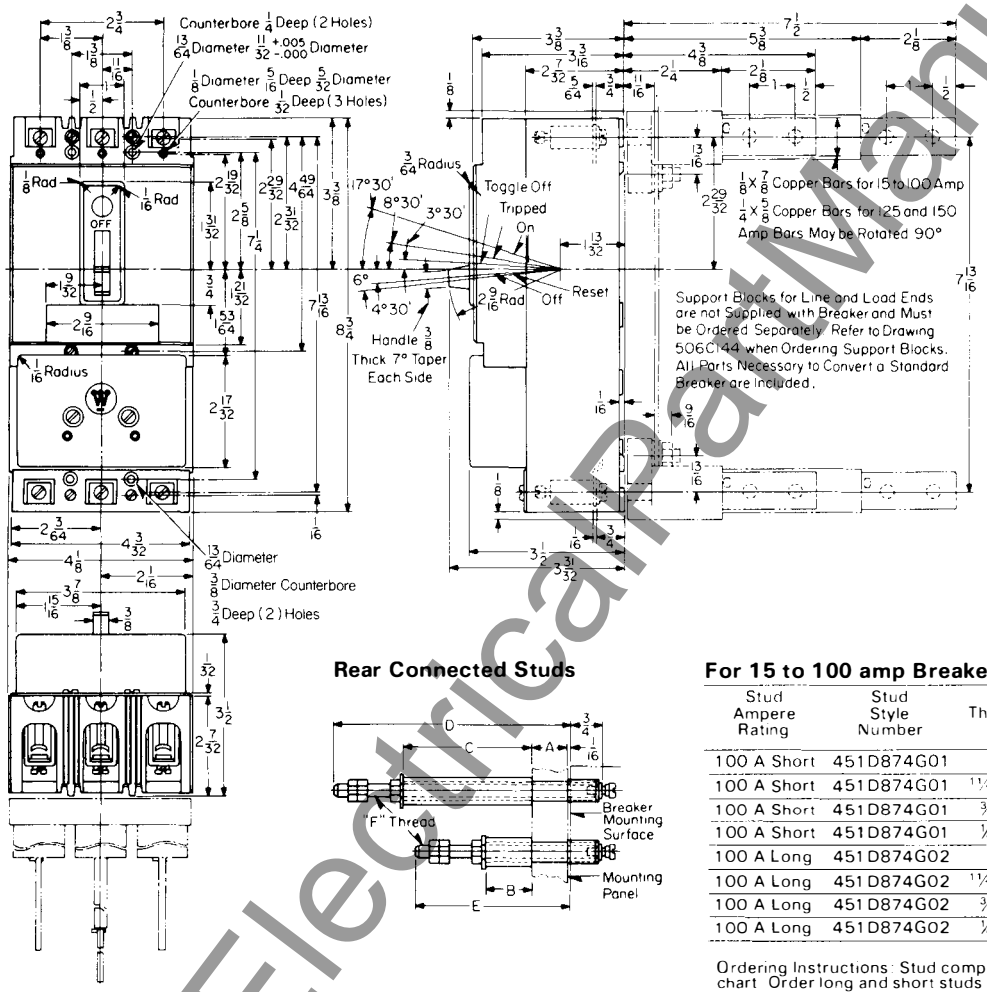

Terminal Arrangements

Wire Connection

Removable Connector UL Listed Wire Range 14 to 1/0 CU 12 to 1/0 AL Will Accomodate 14 to 3/0 Wire

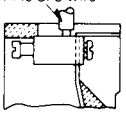

Stud Connection

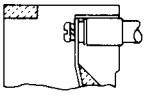

Plug-in or Bolt-on Connection

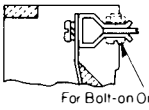

Bus Connection

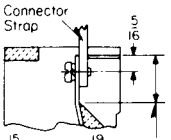

(Available Contact Surface)

Plug-in
Bolt stab to breaker conductor, then plug into support block.

Bolt-on
Bolt stab to support block, then bolt support block assembly to breaker conductors.

Rear Connected Studs

For 15 to 100 amp Breakers

Stud Ampere Rating	Stud Style Number	Panel Thickness A	Tube Length B	Tube Length C	Tube Style Number	D	E	F
100 A Short	451D874G01	1"	1 1/16		32B9446H20			
100 A Short	451D874G01	1 1/16 to 1 5/16	1 3/8		32B9446H21			
100 A Short	451D874G01	3/8 to 5/8	1 11/16		32B9446H22	6 1/8	3 5/8	5/16
100 A Short	451D874G01	1/4 to 5/16	2		32B9446H23			18
100 A Long	451D874G02	1"		3 7/16	32B9446H24			
100 A Long	451D874G02	1 1/16 to 1 5/16		3 3/4	32B9446H25			
100 A Long	451D874G02	3/8 to 5/8		4 1/16	32B9446H26			
100 A Long	451D874G02	1/4 to 5/16		4 3/8	32B9446H27			

Ordering Instructions: Stud complete consists of one stud assembly and one tube as per chart. Order long and short studs and tubes as required to obtain proper bus spacing.

Drilling Plans

For Mounting Bolts

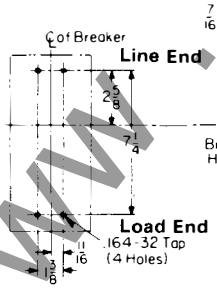

For Rear Connected Studs

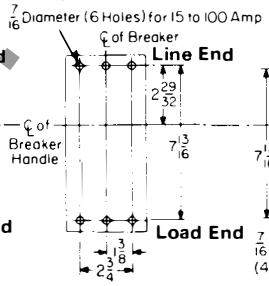

For Plug-in Block

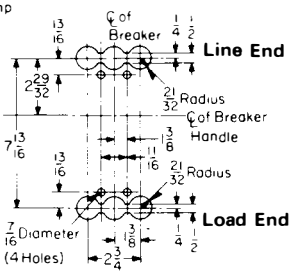

Front Cover Cutout

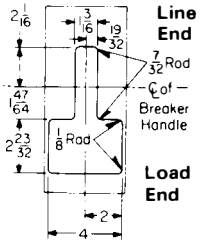

Reproduced From Drawing 4979D67

www.ElectricalPartManuals.com

Type LA TRI-PAC® Breaker

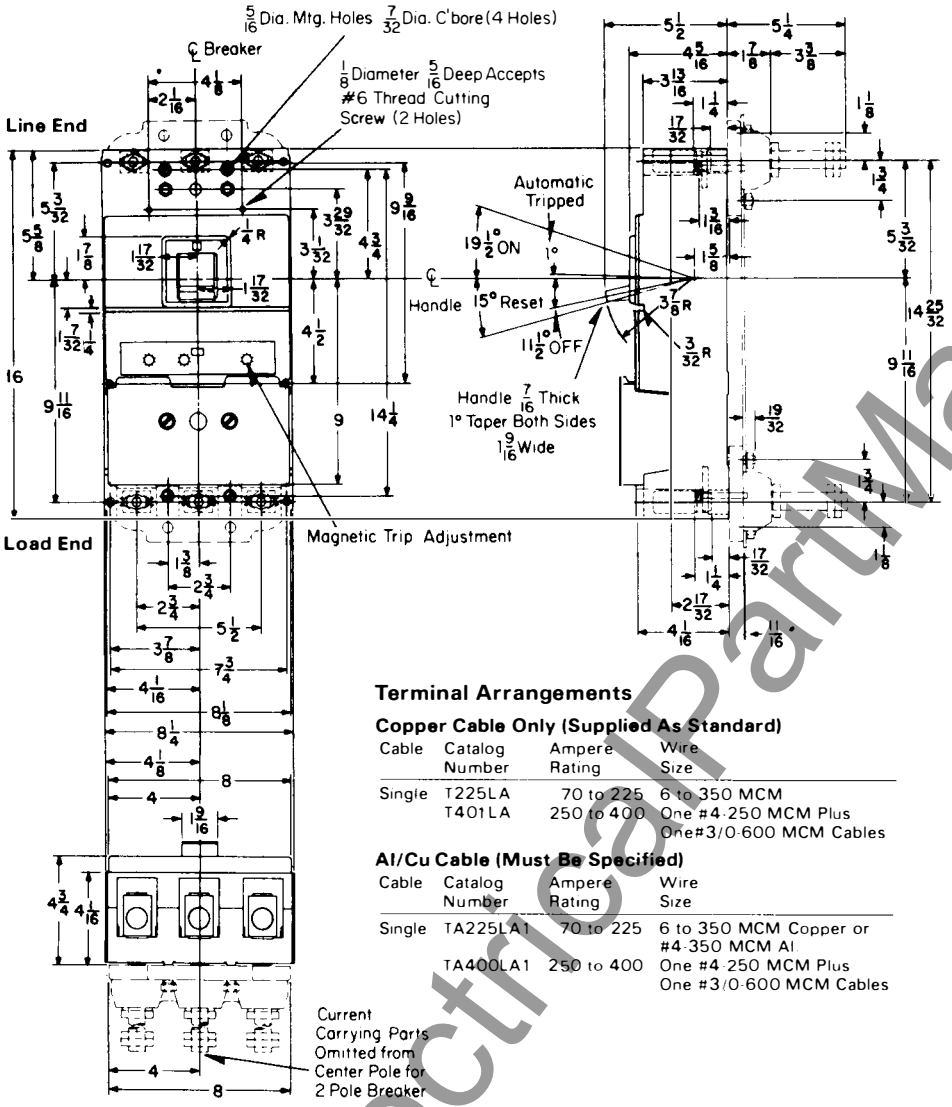

Terminal Arrangements

Copper Cable Only (Supplied As Standard)

Cable	Catalog Number	Ampere Rating	Wire Size
Single	T225LA	70 to 225	6 to 350 MCM
	T401LA	250 to 400	One #4-250 MCM Plus One #3/0-600 MCM Cables

Al/Cu Cable (Must Be Specified)

Cable	Catalog Number	Ampere Rating	Wire Size
Single	TA225LA1	70 to 225	6 to 350 MCM Copper or #4-350 MCM Al
	TA400LA1	250 to 400	One #4-250 MCM Plus One #3/0-600 MCM Cables

Rear Connected Studs

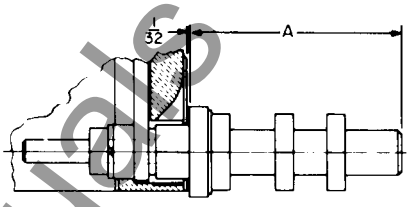

Ampere Rating	Style Number	Dimension A	Thread Size
70-225	1241345	3 7/32	½-13
70-225	1241346	6 9/32	½-13
70-225	1241392	4 31/32	½-13
250-400	05B7383G15	5 15/32	¾-16
250-400	05B7383G16	7 31/32	¾-16
250-400	05B7383G17	10 15/32	¾-16

Plug-In Adapter Kit

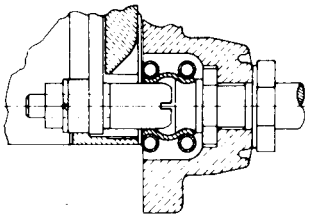

Poles	Ampere Rating	Style Number	Thread Size
2	250-400	313C644G41	¾-16
3	250-400	313C644G42	¾-16

Drilling Plans

For Mounting Bolts

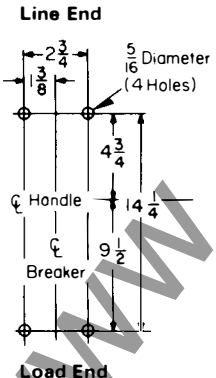

For Rear Connected Studs

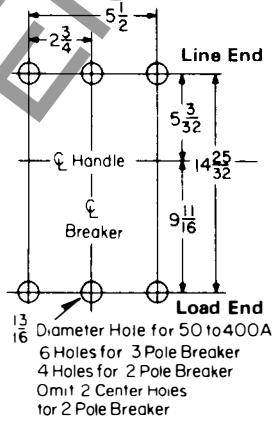

For Plug-In Block

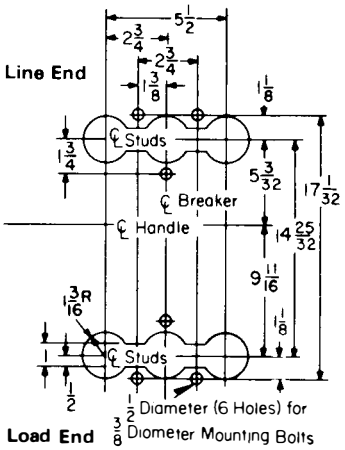

Front Cover Cutout

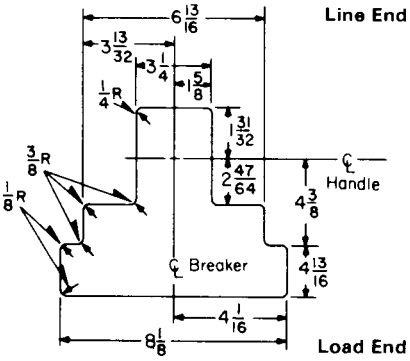

Reproduced from Drawing 655D300

Printed in U.S.A.

www . ElectricalPartManuals . com

October, 1977
Supersedes Dimension Sheet 29-170
all previous issues.
Mailed to: E, D, C/1901, 1928, 1929/PL

Type NB TRI-PAC® Circuit Breakers

Page 49: Outline Dimensions, Drilling Plans
Page 50: Mounting Block Dimensions

AB DE-ION® Circuit Breakers

Type NB TRI-PAC® Breaker

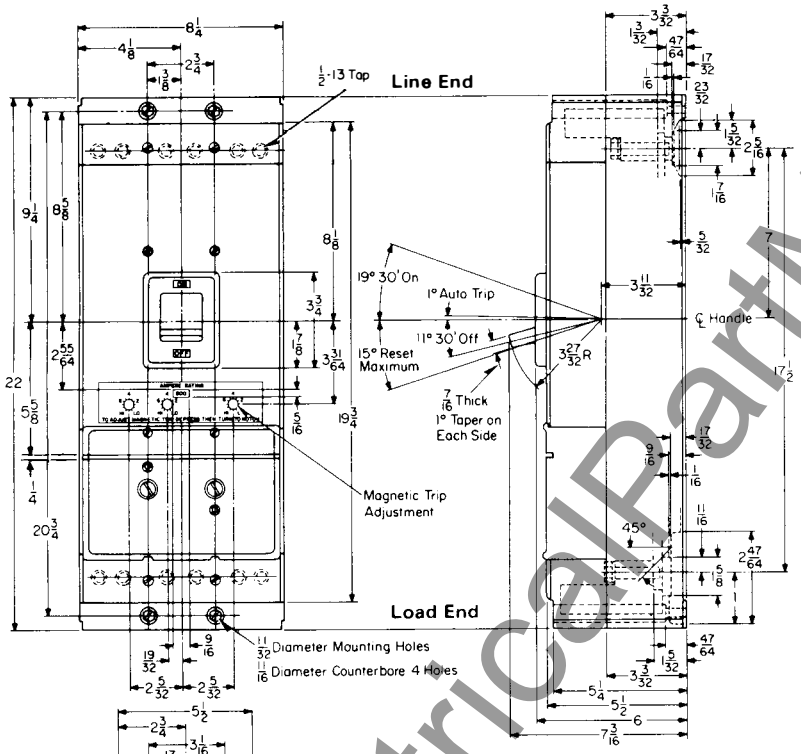

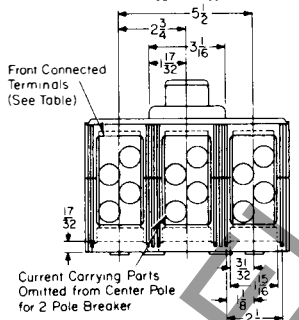

Bolted Rear Connected Studs

For 300 to 450 Amps

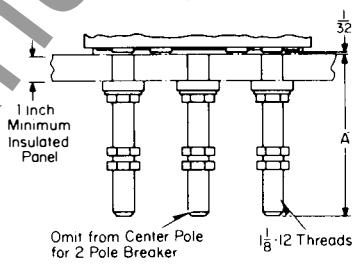

Style No.	A
623B222G01	5 1/2
623B222G02	8
623B222G03	10 1/2

For 500 to 800 Amps Only

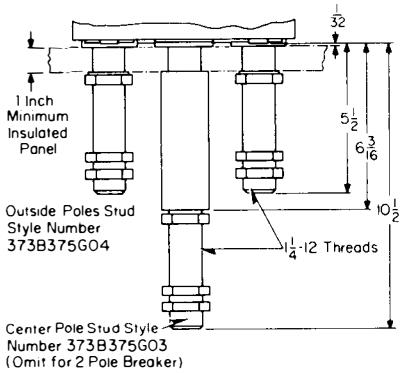

Front Connected Terminals

Amp Rating	Catalog No.	Wire Size
For Copper Cable (Supplied as Standard)		
300 to 350	T350 NB	Single Cable 1 to 600 MCM
400 to 700	T700 NB 1	Double Cable 2/0 to 500 MCM
800	T1000 NB 1	Triple Cable 3/0 to 500 MCM
For AL/CU Cable (Must be Specified)		
300 to 700	TA700 NB 1	Two #1-500 MCM
800	TA1000 NB 1	Three #3/0-400 MCM

Drilling Plans

For Mounting Bolts
(Front Connected Terminals)

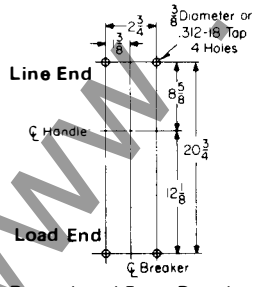

Reproduced From Drawing 372D515

For Rear Connected Studs (Insulated Panel)

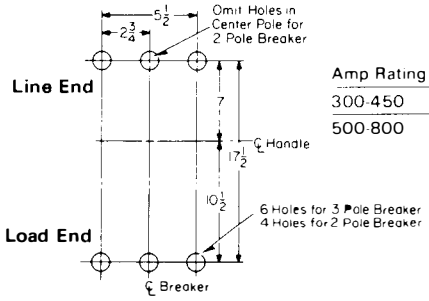

Amp Rating	Hole Dia
300-450	1 3/16
500-800	1 5/16

Front Cover Cutout

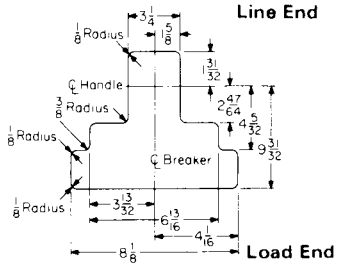

www.ElectricalPartManuals.com

Mounting Block for Type NB TRI-PAC® Breakers

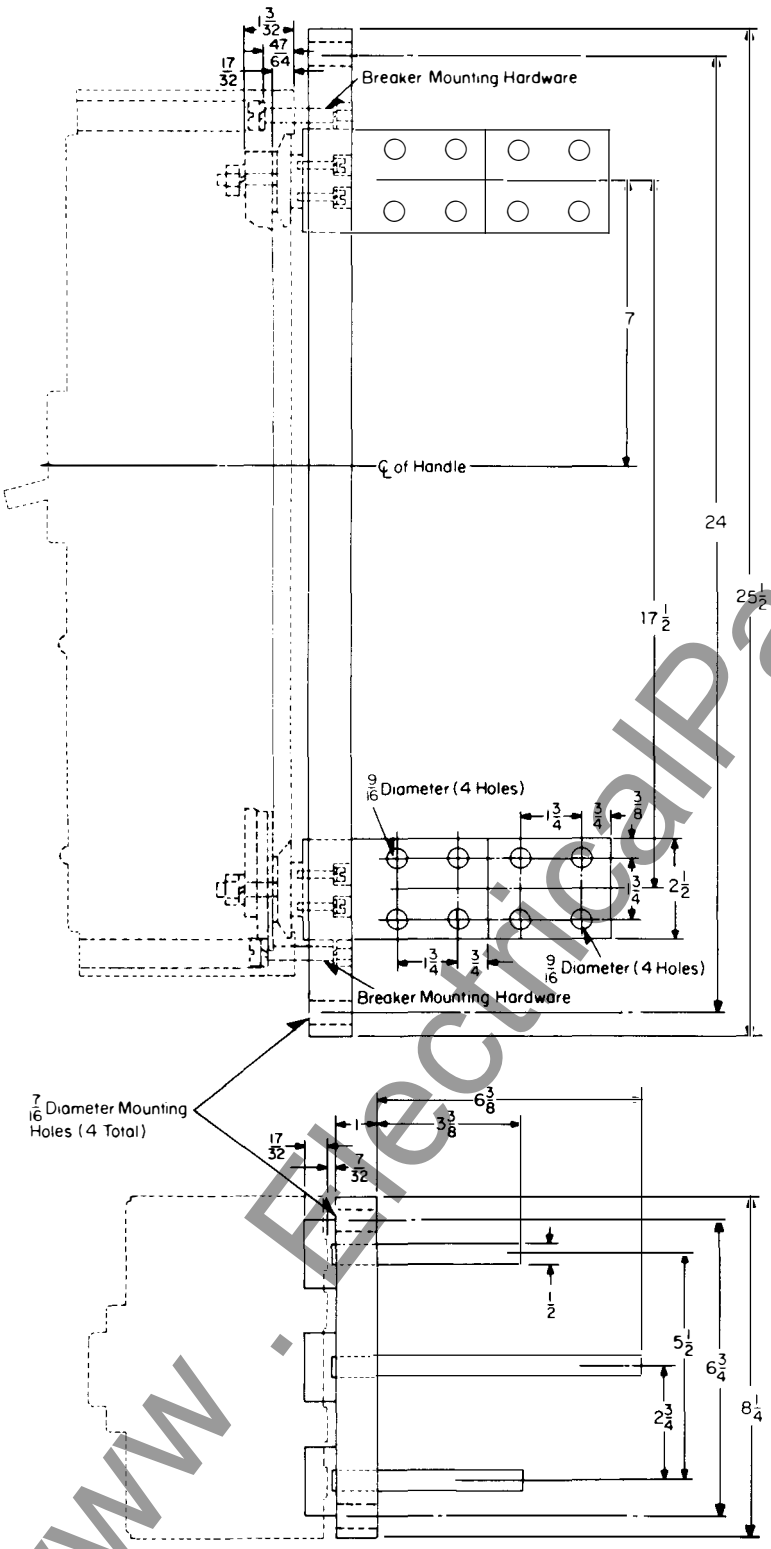

Reproduced From Drawing 4990D38

www . ElectricalPartManuals . com

Printed in U.S.A

October, 1977
Supersedes Dimension Sheet 29-170
all previous issues.
Mailed to: E, D, C/1901, 1928, 1929/PL

Page 51: Type PB TRI-PAC®
Page 52: Motor Operator for Types EB, EHB, FB, HFB, DA, JA, KA, LB, LBB, HKA, HLB Breakers

AB DE-ION® Circuit Breakers

Type PB TRI-PAC® Breaker

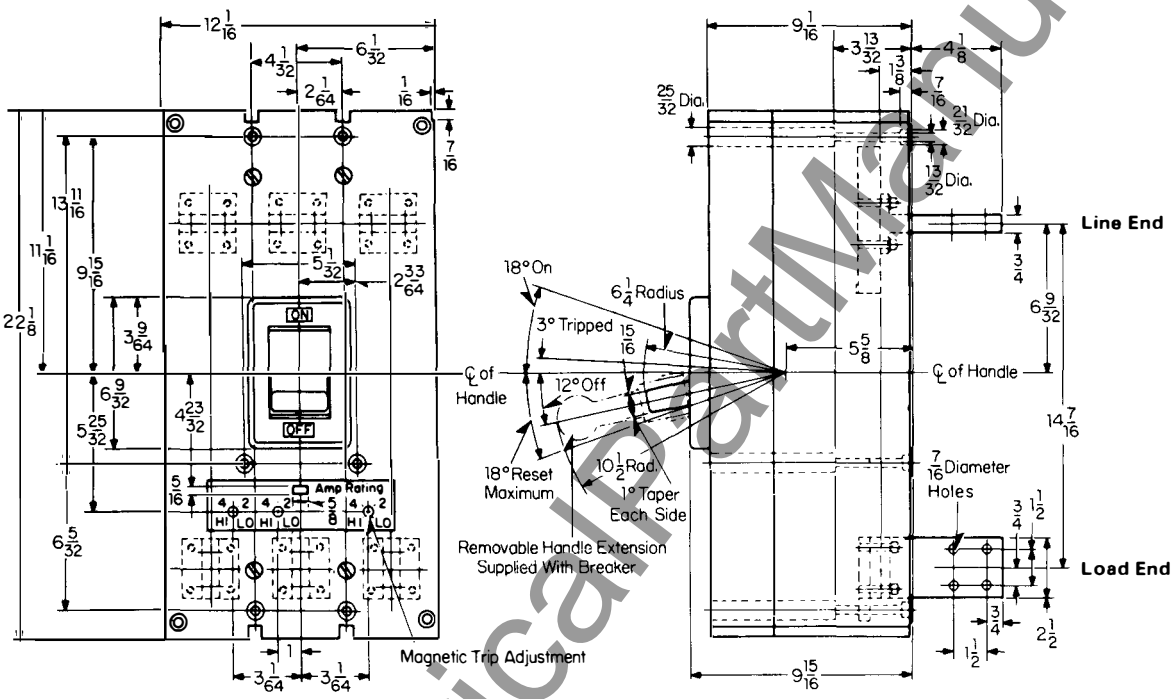

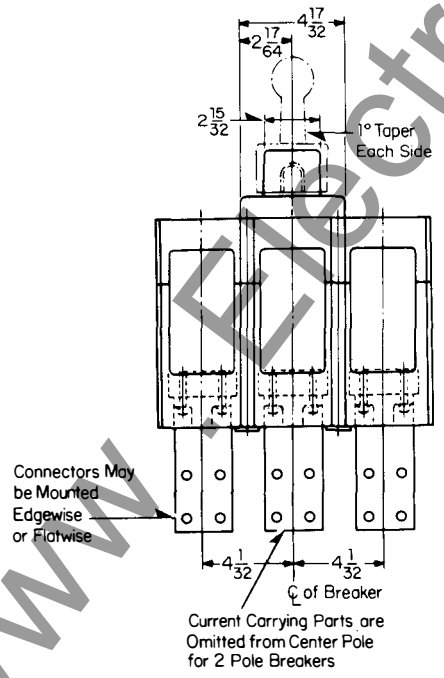

Drilling Plan
For Mounting Bolts

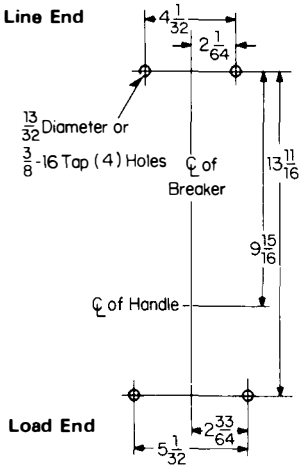

Front Cover Cutout

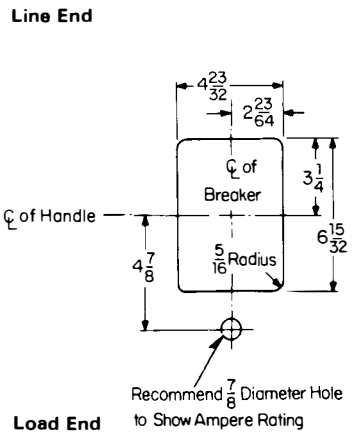

Reproduced From Drawing 654D460

www.ElectricalPartManuals.com

Motor Operators

EB, EHB, FB and HFB Breaker and Operator

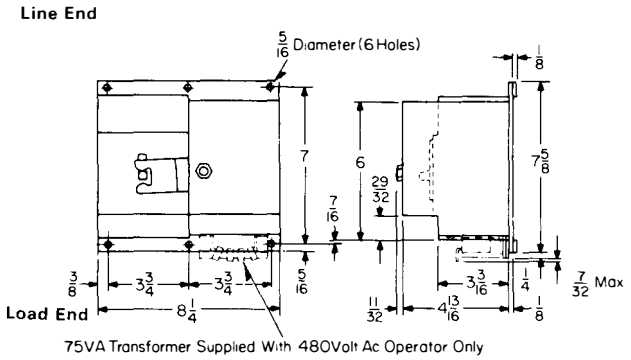

Drilling Plan

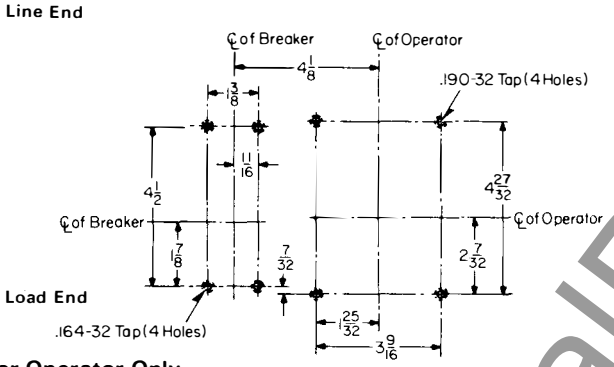

Motor Operator Only

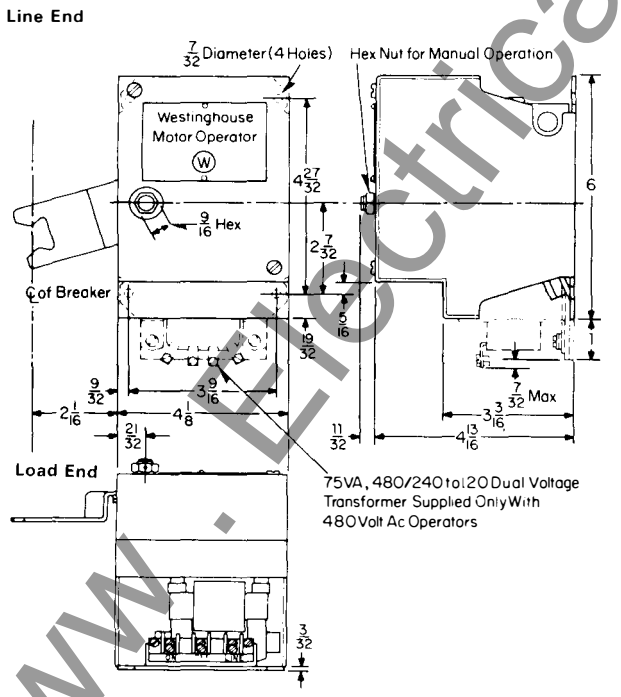

DA, JA, KA, LB, LBB, HKA and HLB Breaker and Operator

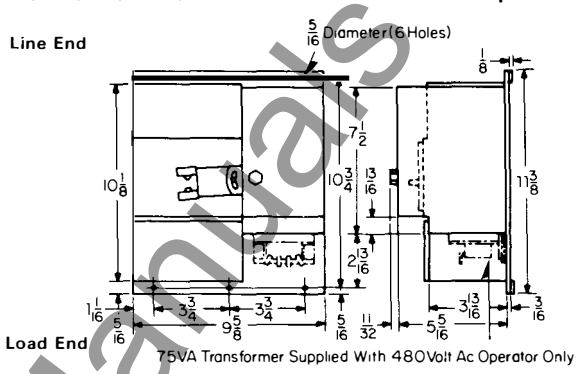

Drilling Plan

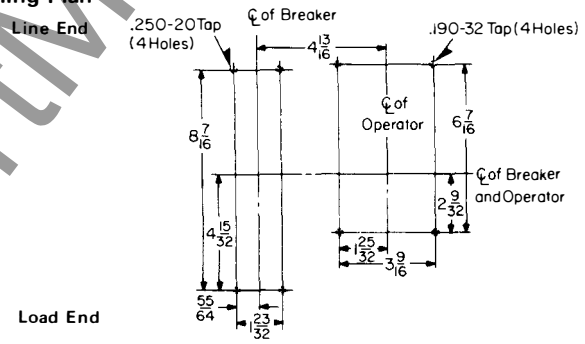

Motor Operator Only

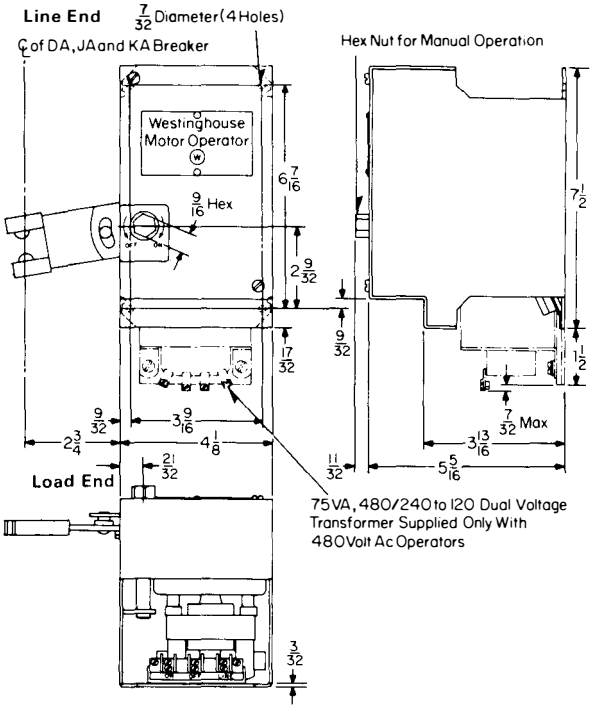

Reproduced From Drawings 4978D71 and 657D820

Printed in U.S.A.

www.ElectricalPartManuals.com

October, 1977
Supersedes Dimension Sheet 29-170
all previous issues.
Mailed to: E, D, C/1901, 1928, 1929/PL

Motor Operators for Types JB, KB, LAB, LA, LC Circuit Breakers

Page 53: For Types JB, KB
Page 54: For Types LAB, LA, LC

AB DE-ION® Circuit Breakers

Motor Operators

JB, KB and HKB Breaker and Operator
(Assembled to Base Plate)

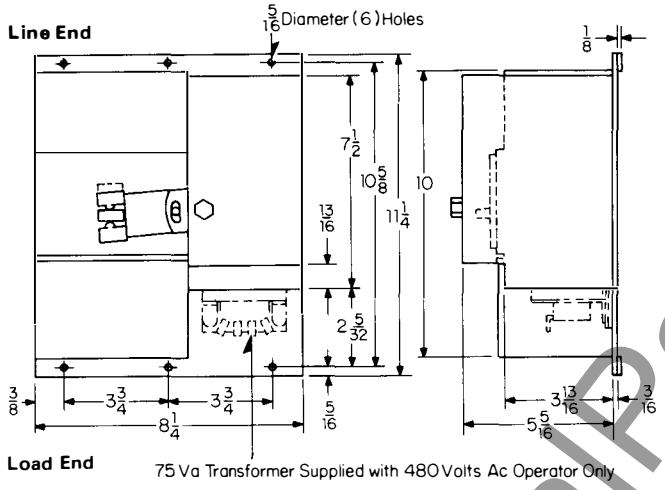

Drilling Plan

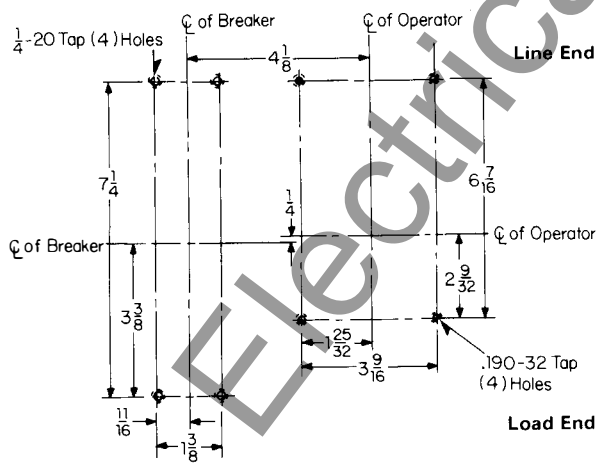

Motor Operator Only

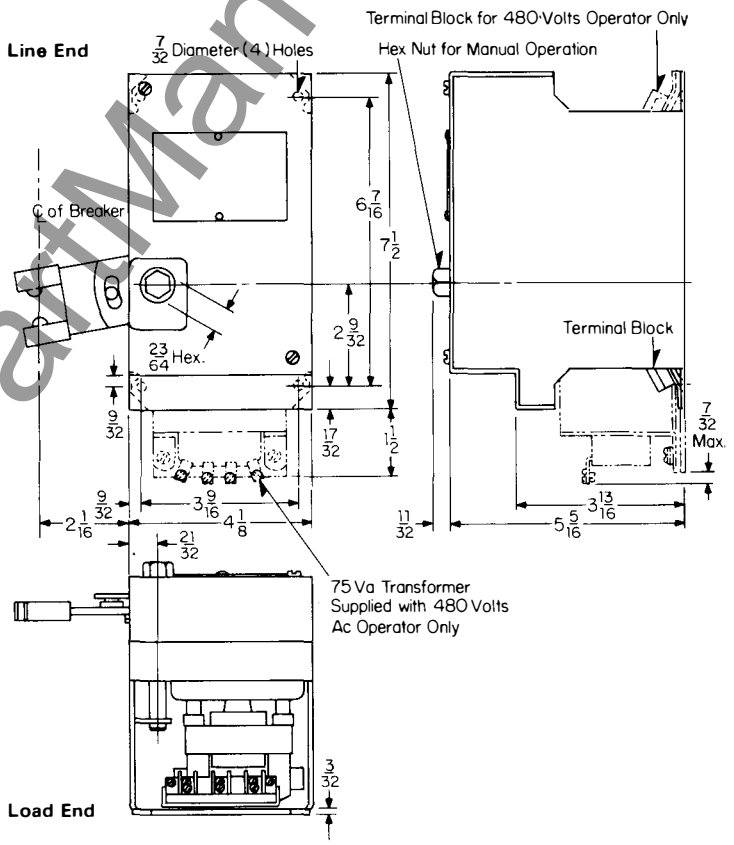

Reproduced From Drawing 1250C27

www.ElectricalPartManuals.com

Motor Operators for LAB, LA and LC Breakers

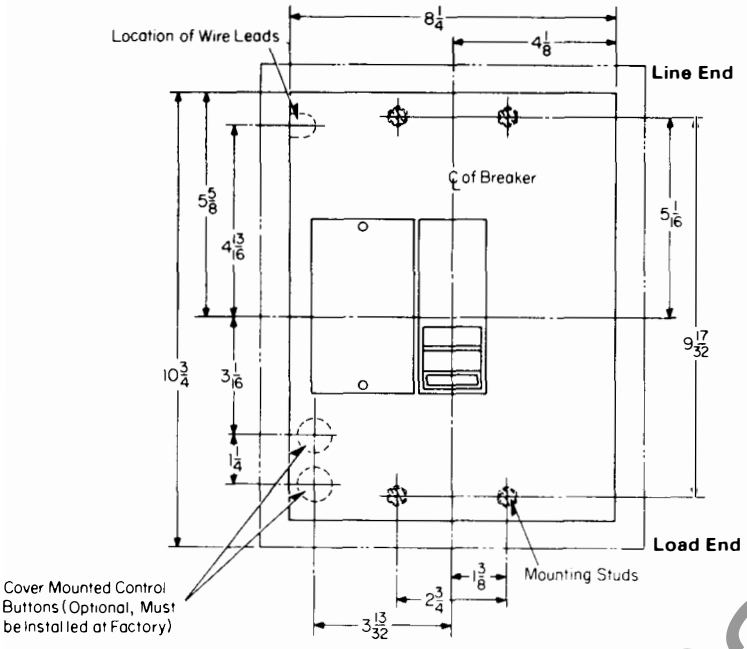

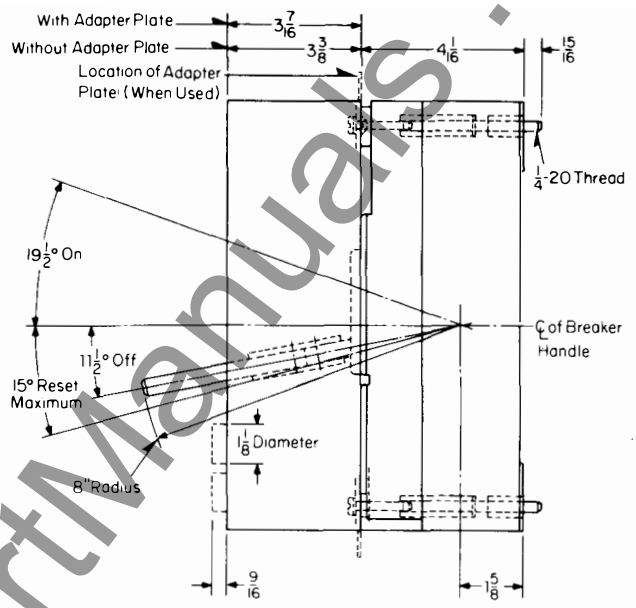

Drilling Plan and Cutout (Adapter Plate)

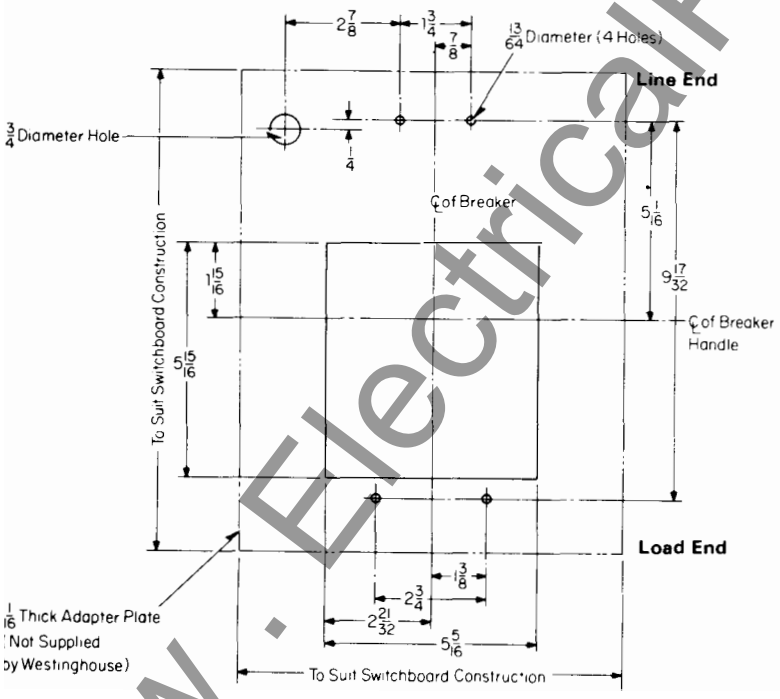

Reproduced From Drawing 5669D04

Printed in U.S.A.

www.ElectricalPartManuals.com

October, 1977
Supersedes Dimension Sheet 29-170
all previous issues.
Mailed to: E, D, C/1901, 1928, 1929/PL

Motor Operators for Types MA, HMA, NB, HNB, and SELTRONIC Type MC, HMC, NC, HNC Circuit Breakers

Page 55: For Types MA, HMA, MC, HMC
Page 56: For Types NB, HNB, NC, HNC

AB DE-ION® Circuit Breakers

Motor Operator for MA, HMA, MC, HMC Breakers

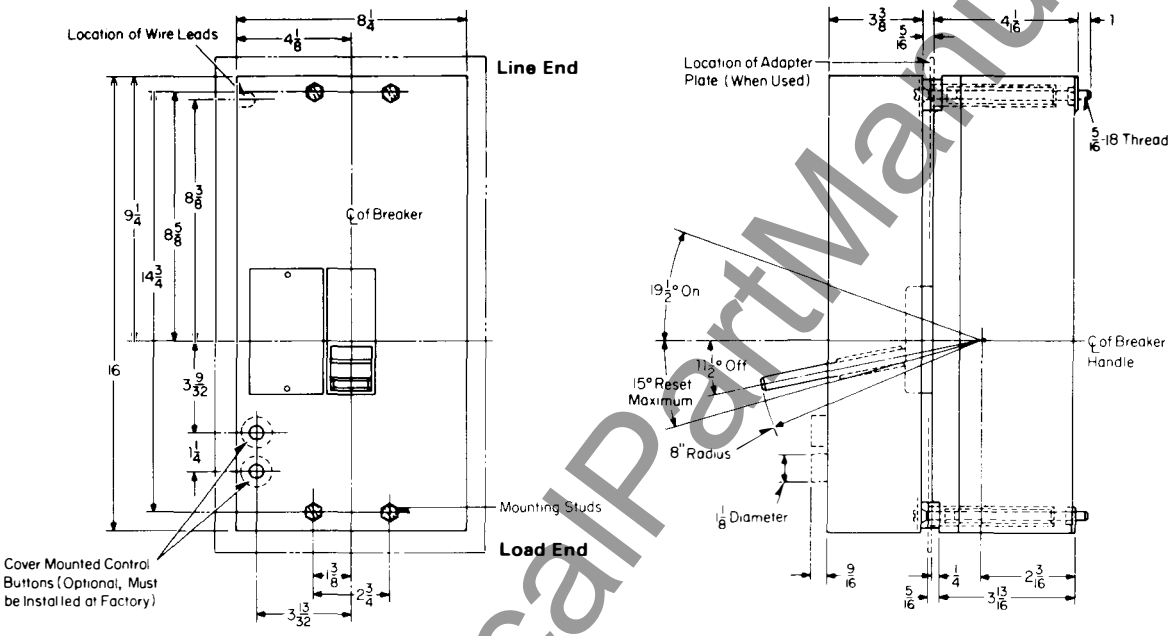

Drilling Plan and Cutout (Adapter Plate)

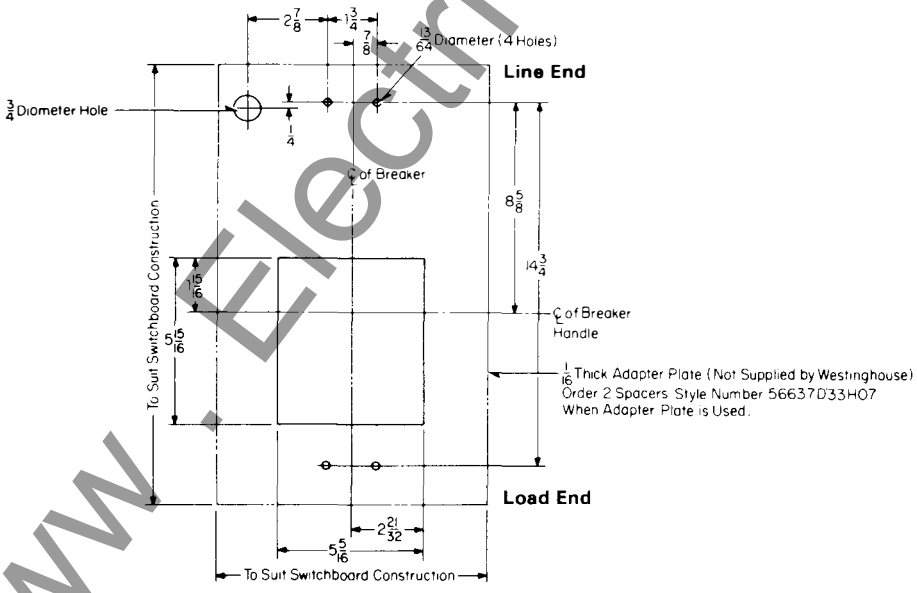

Reproduced From Drawing 5669D03

www.ElectricalPartManuals.com

Motor Operator for NB, HNB, NC, HNC Breakers

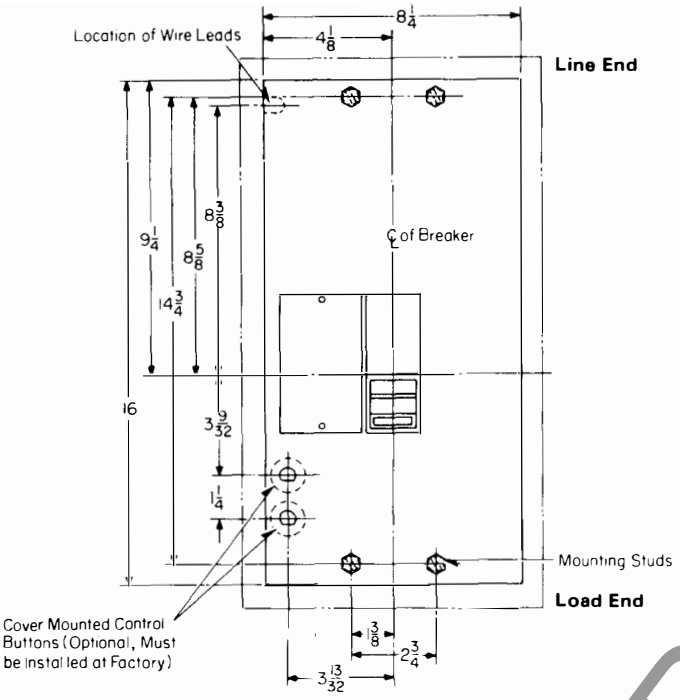

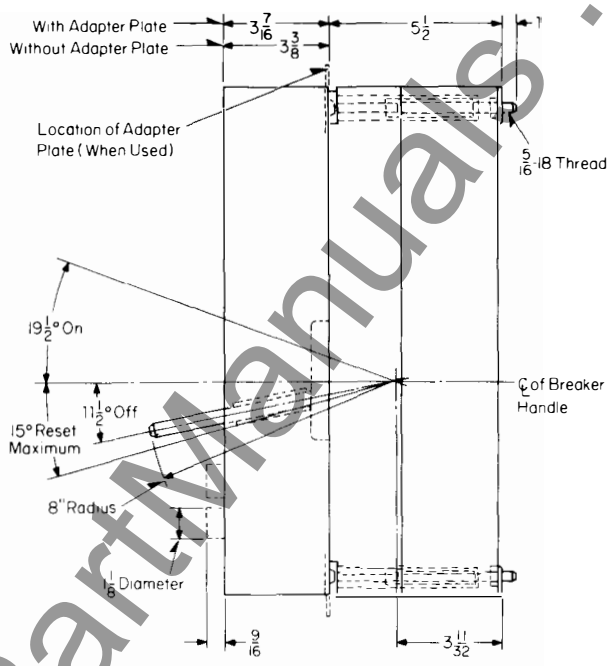

Drilling Plan and Cutout (Adapter Plate)

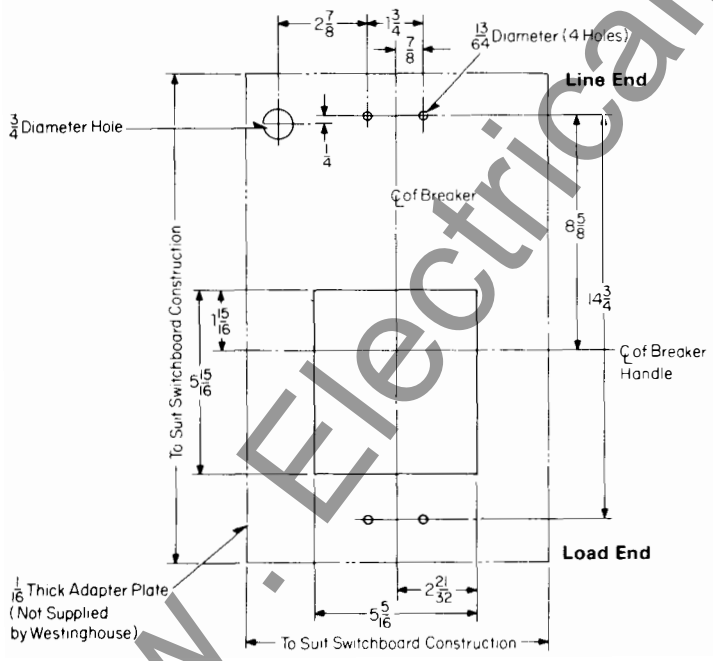

Reproduced From Drawing 5669D02

www.ElectricalPartManuals.com

Printed in U.S.A.

October, 1977
Supersedes Dimension Sheet 29-170
all previous issues.
Mailed to: E, D, C/1901, 1928, 1929/PL

Motor Operators for Types PB and
LA TRI-PAC® Circuit Breakers

Page 57: For Type PB
Page 58: For Type LA TRI-PAC

AB DE-ION® Circuit Breakers

Motor Operator for Type PB Breaker

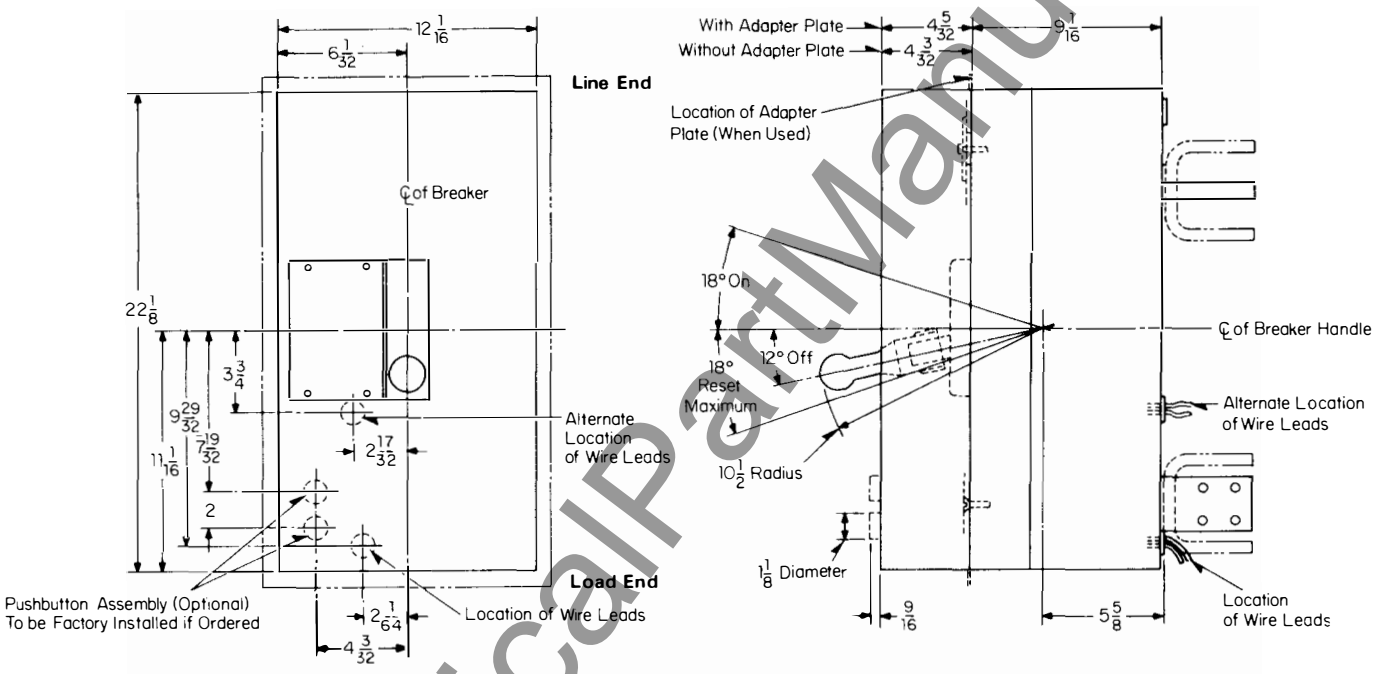

Drilling Plan and Cutout
Adapter Plate

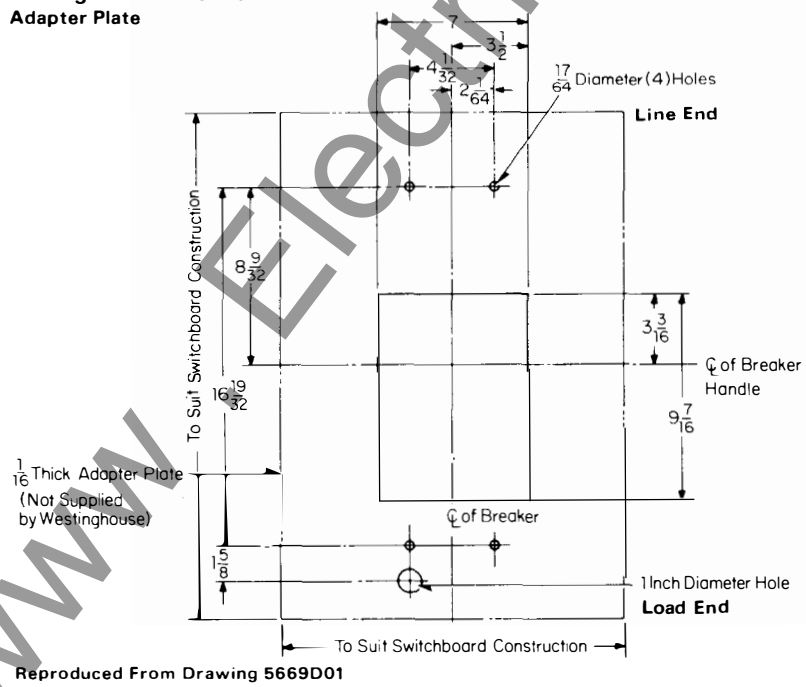

Reproduced From Drawing 5669D01

www.ElectricalPartManuals.com

Motor Operator for Type LA TRI-PAC® Breaker

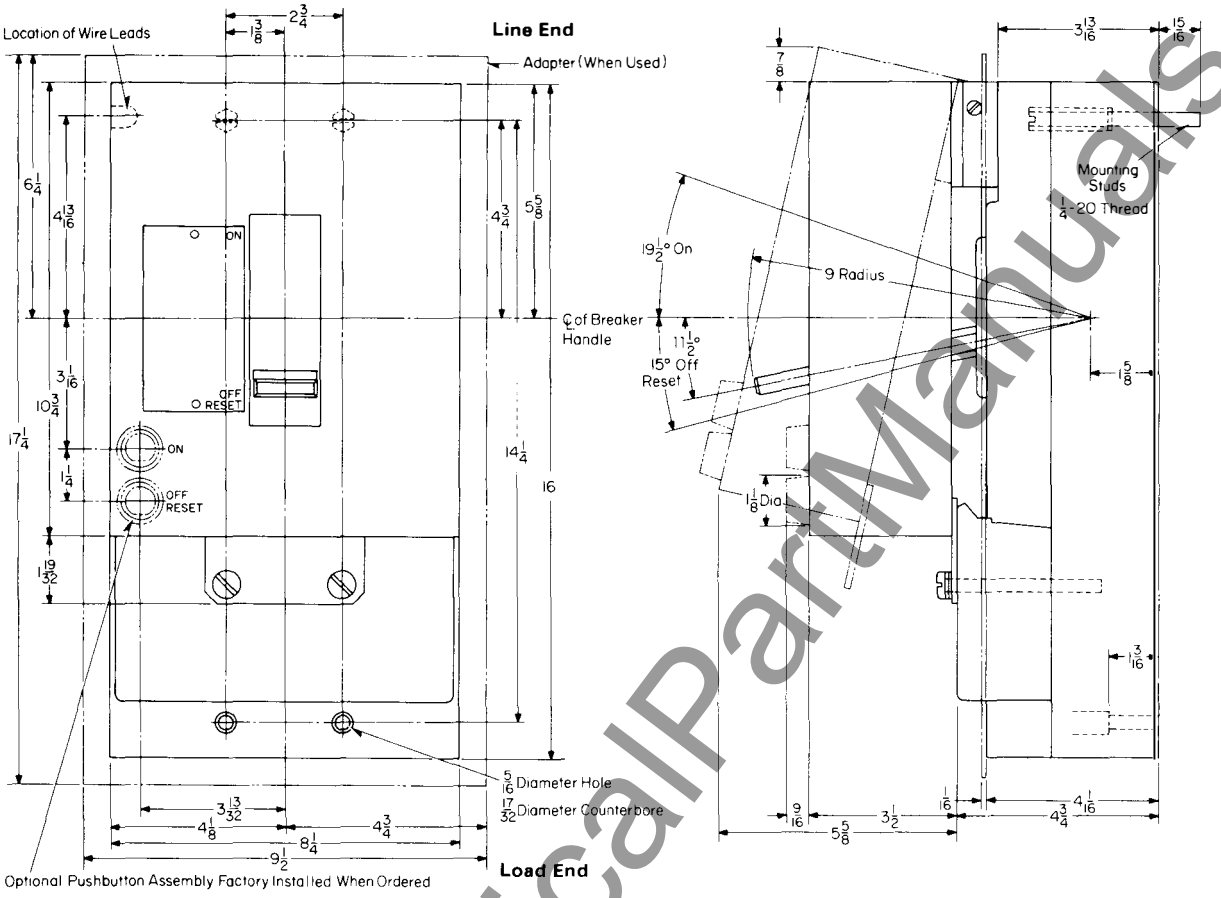

Switchboard Cutout For Motor Operator

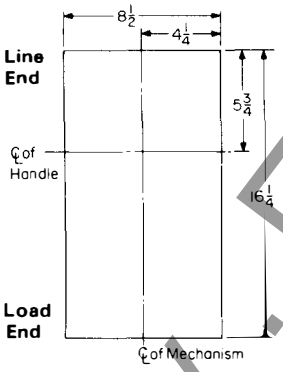

Transformer 480/120 Volts
(Supplied for Separate Mounting by Customer for 480 Volt Operators)

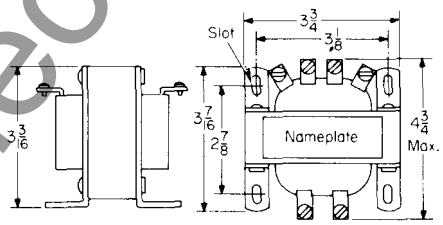

Reproduced From Drawing 5677D75

Westinghouse Electric Corporation
Low Voltage Breaker Division
Beaver, Pennsylvania 15009

Printed in U.S.A.

www.ElectricalPartManuals.com

October, 1977
Supersedes Dimension Sheet 29-170
all previous issues.
Mailed to: E, D, C/1901, 1928, 1929/PL

Motor Operator for NB TRI-PAC® Circuit Breakers and Draw-out Frame for LA, HLA, LC, HLC 600 Ampere Circuit Breakers

Page 59: Motor Operator for NB TRI-PAC Breaker
Page 60: Drawout Frame for LA, HLA, LC, HLC 600 Ampere Breakers

AB DE-ION® Circuit Breakers

Motor Operator for Type NB TRI-PAC Breaker

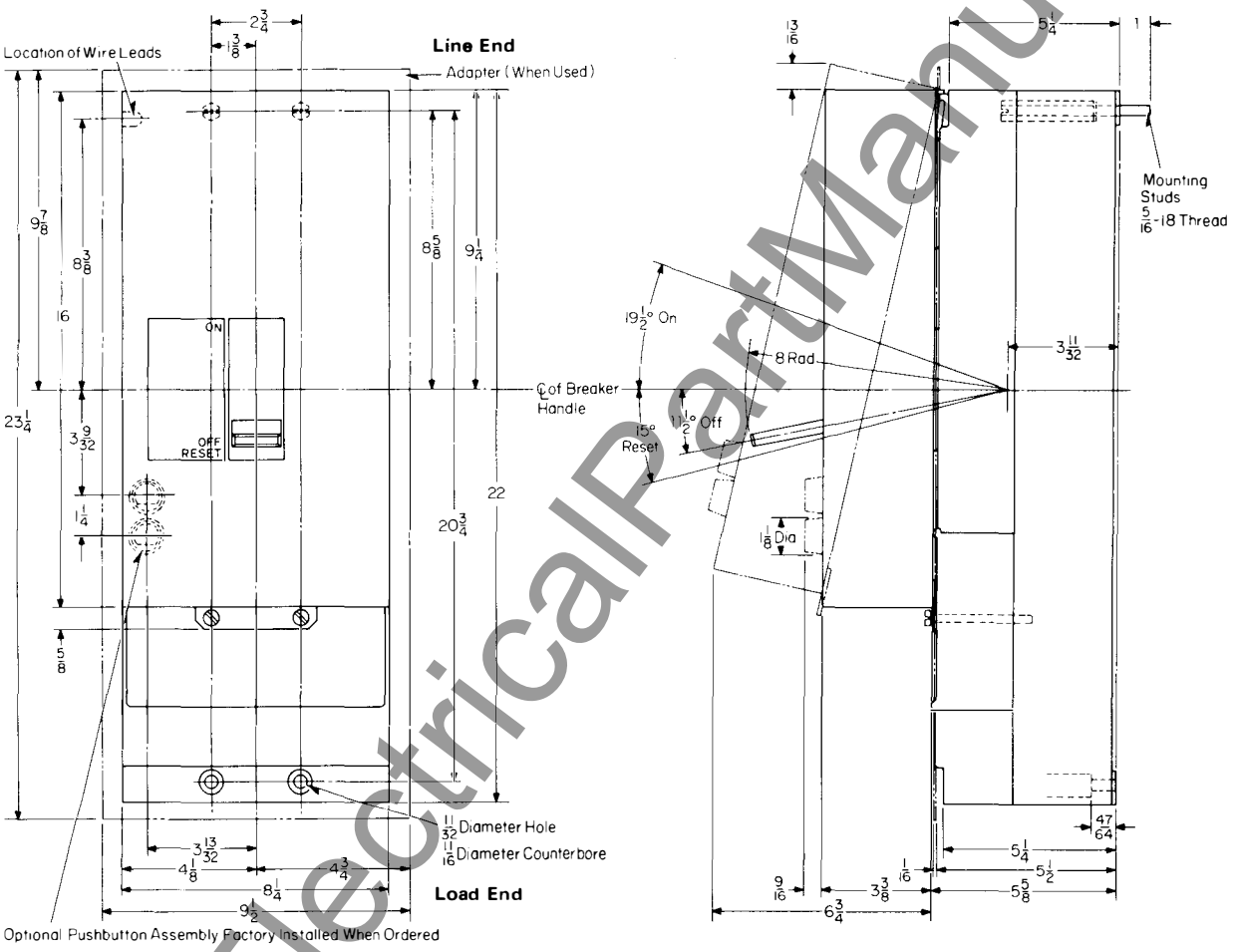

Switchboard Cutout For Motor Operator

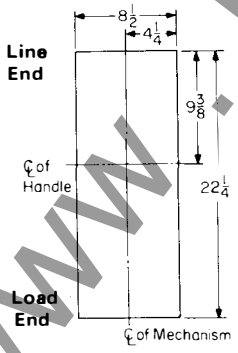

Transformer 480/120 Volts

(Supplied for Separate Mounting by Customer for 480 Volt Operators)

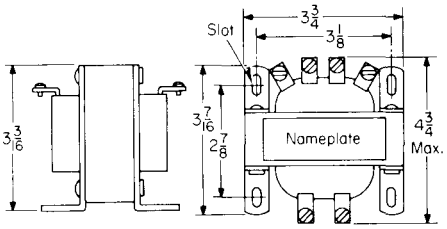

Reproduced From Drawing 5677D76

www.ElectricalPartManuals.com

Drawout Frame for Type LA, HLA, LC, HLC 600 Ampere Breakers

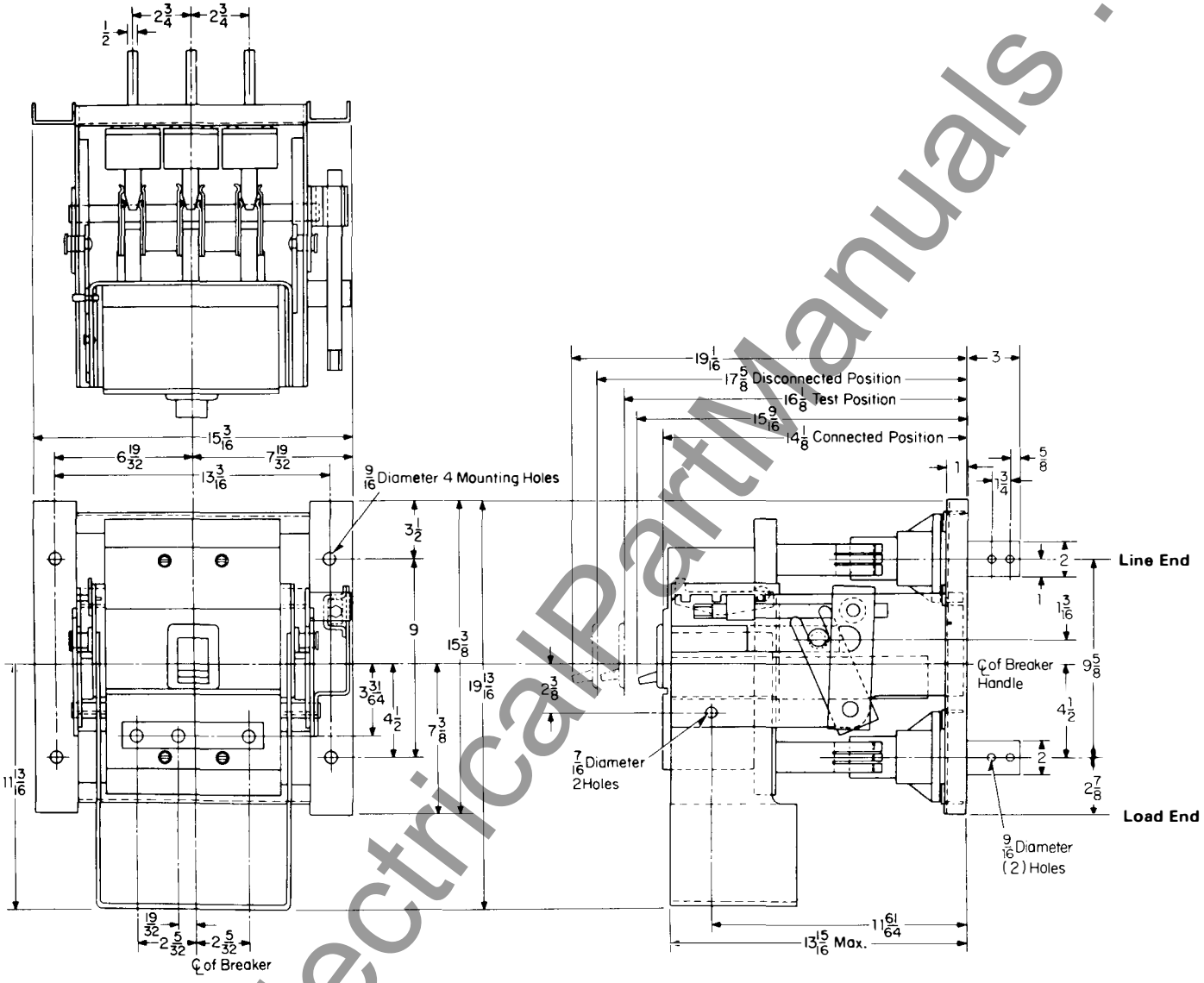

Front Cover Cutout

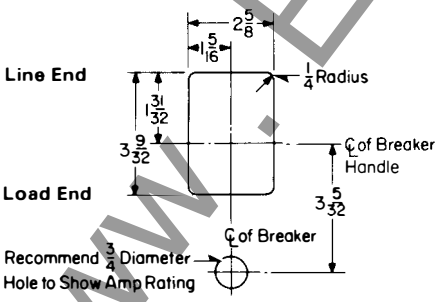

Reproduced From Drawing 5677D80

Printed in U.S.A.

www.ElectricalPartManuals.com

October, 1977
Supersedes Dimension Sheet 29-170
all previous issues.
Mailed to: E, D, C/1901, 1928, 1929/PL

Drawout Frames for MA, HMA, NB, HNB, and Types MC, HMC, NC, HNC SELTRONIC™ Circuit Breakers

Page 61: For MA, HMA, MC, MCG, HMC, HMCG
Page 62: For NB, HNB, NC, NCG, HNC, HNCG

AB DE-ION® Circuit Breakers

Drawout Frame for Type MA, HMA, MC, MCG, HMC, HMCG Breakers

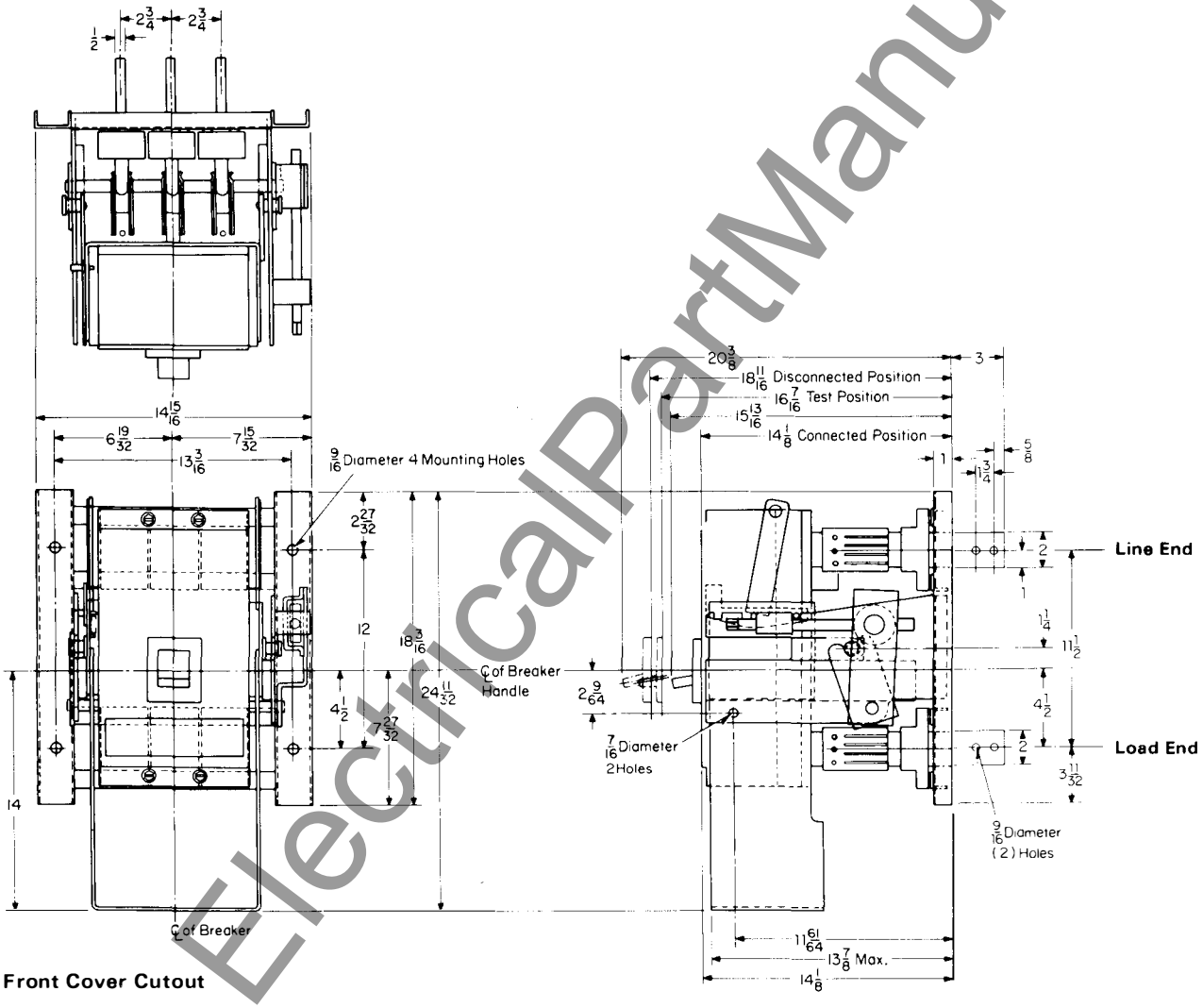

Front Cover Cutout

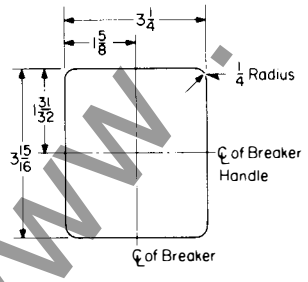

Reproduced From Drawing 5682D16

www.ElectricalPartManuals.com

Drawout Frame for Type NB, HNB, NC, NCG, HNC, HNCG Breakers

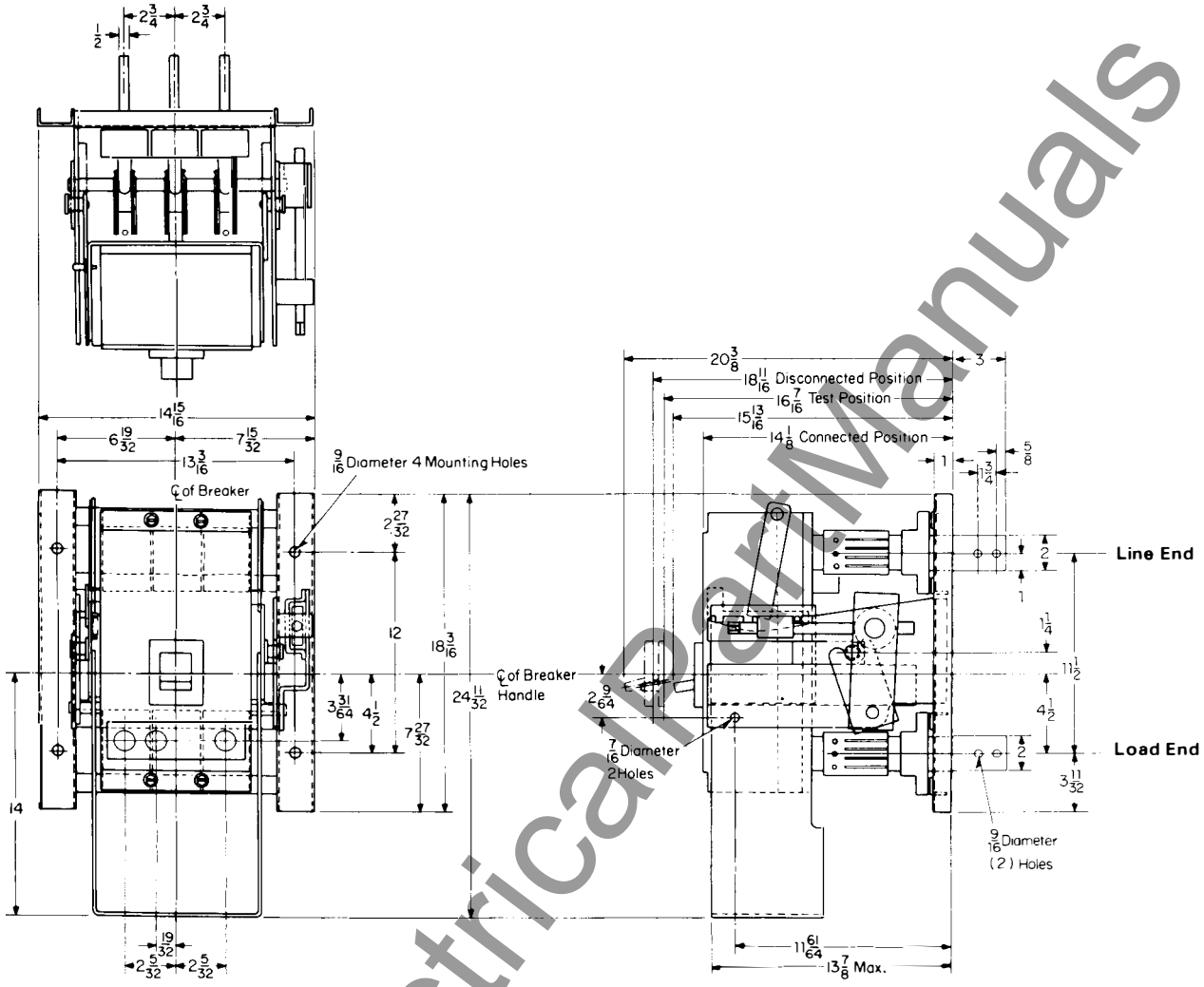

Front Cover Cutout

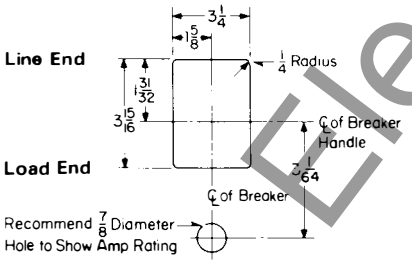

Reproduced From Drawing 5677D81

Westinghouse Electric Corporation
Low Voltage Breaker Division
Beaver, Pennsylvania 15009

Printed in U.S.A.

www.ElectricalPartManuals.com

October, 1977
Supersedes Dimension Sheet 29-170
all previous issues.
Mailed to: E, D, C/1901, 1928, 1929/PL

Drawout Frames for Types PCC, PCCG
SELTRONIC™ Circuit Breakers and Type NB
TRI-PAC® 800 Amp

Page 63: For Types PC, PCCG
Page 64: For NB TRI-PAC 800 Amp

AB DE-ION® Circuit Breakers

Drawout Frame for Type PC, PCCG Breakers

2500 and 3000 Amp Bus Arrangement

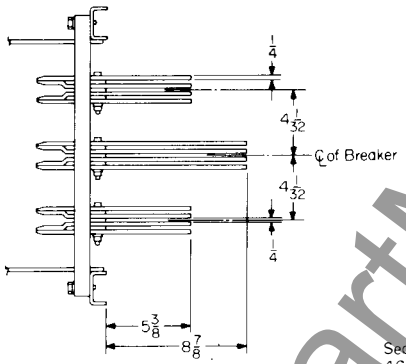

2000 Amp Bus Arrangement

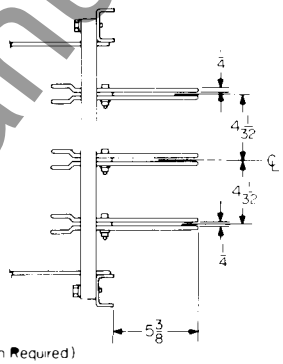

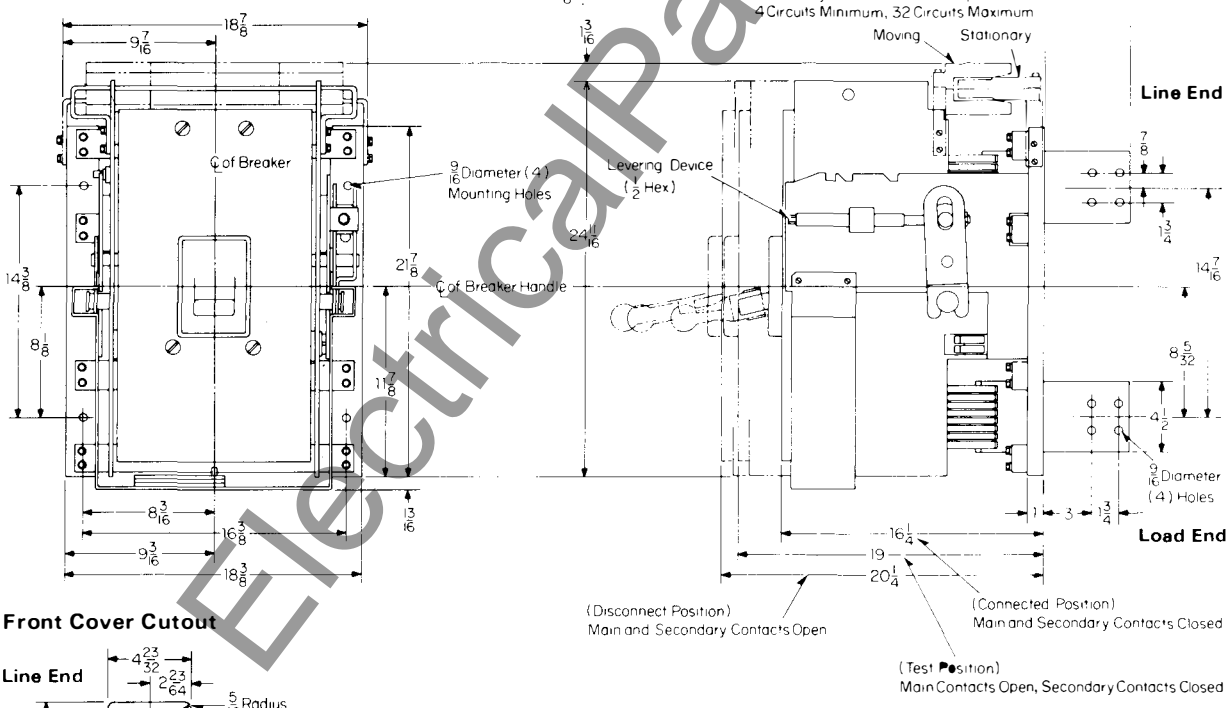

Front Cover Cutout

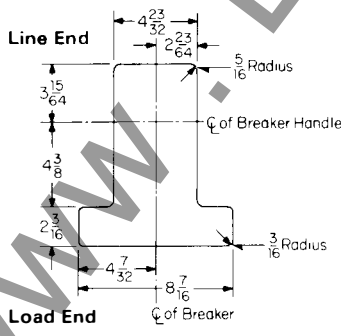

Reproduced From Drawing 2601D80

www.ElectricalPartManuals.com

Drawout Frame for Type NB TRI-PAC® 800 Ampere Frame

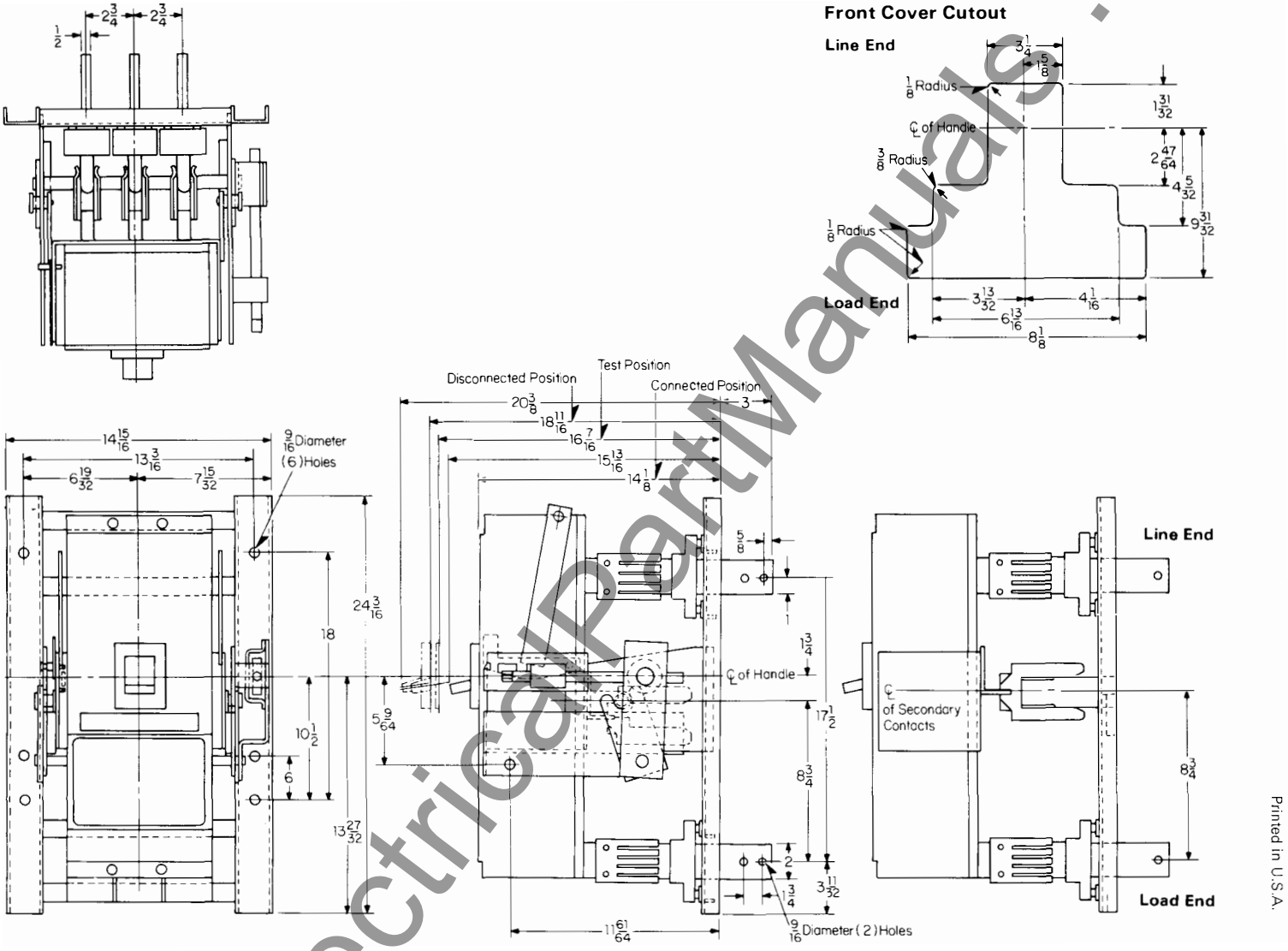

Reproduced From Drawing 2603D31

Westinghouse Electric Corporation
Low Voltage Breaker Division
Beaver, Pennsylvania 15009

Printed in U.S.A.

www.ElectricalPartManuals.com

Westinghouse Electric Corporation
Low Voltage Breaker Division
Beaver, Pennsylvania 15009

October, 1977
Supersedes Dimension Sheet 29-170
all previous issues.
Mailed to: E, D, C/1901, 1928, 1929/PL

Outline Dimensions and Drilling Plans
for Standard, MARK 75® and TRI-PAC®
Molded Case Circuit Breakers

AB DE-ION® Circuit Breakers

Index

Type Breaker — Page

Standard Breakers
100 Amperes
Quicklag® Ground Fault, Types QPGF, QBGF 1 Pole . . . 3
Quicklag Ground Fault, Type QPGF, 2 Poles . . . 5
Quicklag Ground Fault, Type QBGF, 2 Poles . . . 6
Quicklag Types QPH, QHP, QNPL, 1 Pole . . . 7
Quicklag Types QPH, QHP, QNPL, HQNP, 2, 3 Poles . . . 8
Quicklag Types HQP, QPH, 1 Pole . . . 9
Quicklag Type HQP, 2 Poles . . . 10
Quicklag Type QBH and Types BA, HBA 277 Volts, 1 Pole . . . 11
Quicklag Type QBH and Types BA, HBA, 2, 3 Poles . . . 12
Quicklag Type QBH and Type BAB, 1 Pole . . . 13
Quicklag Type BAB, 2 Poles . . . 14
Quicklag Types QCL, QHCL, QCH, 1 Pole . . . 15
Quicklag Types QCH, QHCL, HQC, QCL, QHC 2, 3 Poles . . . 16
Quicklag Type QC 1 Pole . . . 17
Quicklag Type QC 2 Pole . . . 18
Types EB, EHB . . . 19

150 Amperes
Type FB . . . 19
LFB Current Limiter for Type FB . . . 21
Type LC SELTRONIC™ Breaker . . . 29

225 Ampere
Types CA, CAH . . . 23
Types JA, KA . . . 24

250 Amperes
Types JB, KB . . . 25

300 Amperes
Type LC SELTRONIC Breaker . . . 29

400 Amperes
Type DA . . . 26
Types LAB, LA . . . 27
Types LB, LBB . . . 28

600 Amperes
Type LC SELTRONIC Breaker . . . 30
Type LA . . . 31

800 Amperes
Type MA . . . 32
Type MC, MCG SELTRONIC Breakers 33

1200 Amperes
Type NC, NCG SELTRONIC Breakers . 34
Type NB . . . 35
Mounting Block for Types NB, HNB, NC, HNC . . . 36

2000 Amperes
Type PB Rear Connected . . . 37
Type PBF Front Connected . . . 38
Fuse Mounting Base for Types PB, PBF . . . 39
Types PC, PCC Rear Connected SELTRONIC Breakers . . . 41
Types PCF, PCCF, PCFG, PCCFG Front Connected SELTRONIC Breakers . . . 43

2500 Amperes
Type PB Rear Connected . . . 40
Type PC, PCC Rear Connected SELTRONIC Breakers . . . 41
Types PCF, PCCF, PCFG, PCCFG Front Connected SELTRONIC Breakers . . . 43

3000 Amperes
Type PB Rear Connected . . . 40
Types PC, PCC Rear Connected SELTRONIC Breakers . . . 42

SELTRONIC Circuit Breaker Accessories
Ground Fault Indicator Kit . . . 44
External (Fourth) Current Monitor Used With SELTRONIC Breakers With Built-in Ground Fault Protection . . . 45

High Interrupting Capacity Breakers
MARK 75® Circuit Breakers
100 Amperes
Type QHP 1 Pole . . . 7
Type QHP 2, 3 Poles . . . 8
Type HBA 1 Pole . . . 11
Type HBA 2, 3 Poles . . . 12
Type QHCL 1 Pole . . . 15
Types QHCL, QHC 2, 3 Poles . . . 16

150 Amperes
Type HFB . . . 19
Type HLC SELTRONIC Breaker . . . 29

225 Amperes
Type HKA . . . 24
Type HKB . . . 25

300 Amperes
Type HLC SELTRONIC Breaker . . . 29

400 Amperes
Type HLA . . . 27
Type HLB . . . 28

600 Amperes
Type HLC SELTRONIC Breaker . . . 30

800 Amperes
Type HMA . . . 32
Types HMC, HMCG SELTRONIC Breakers . . . 33

1200 Amperes
Type HNB . . . 35
Types HNC, HNCG SELTRONIC Breakers . . . 34

TRI-PAC® Circuit Breakers
100 Ampere Type FB . . . 47
400 Ampere Type LA . . . 48
800 Ampere Type NB . . . 49
1600 Ampere Type PB . . . 51
Mounting Block for NB TRI-PAC . . . 50

Motor Operators
For EB, EHB, FB, HFB, DA, JA, KA, HKA Breakers . . . 52
For JB, KB, HKB Breakers . . . 53
For LAB, LA, HLA, LC, HLC Breakers . 54
For MA, HMA, MC, HMC Breakers . . . 55
For NB, HNB, NC, HNC Breakers . . . 56
For PB, PC, PCC and PB TRI-PAC Breakers . . . 57
For LA TRI-PAC Breakers . . . 58
For NB TRI-PAC Breakers . . . 59

Drawout Frames
For LA600, HLA, LC600, HLC600 Breakers . . . 60
For MA, HMA, MC, HMC, MCG, HMCG Breakers . . . 61
For NB, HNB, NC HNC, NCG, HNCG Breakers . . . 62
For PCC, PCCG 2000, 2500, 3000 Ampere Breakers . . . 63
For NB TRI-PAC Breakers . . . 64

www.ElectricalPartManuals.com

www.ElectricalPartManuals.com

Printed in U.S.A.

Westinghouse Electric Corporation
Low Voltage Breaker Division
Beaver, Pennsylvania 15009

October, 1977
Supersedes Dimension Sheet 29-170
all previous issues.
Mailed to: E, D, C/1901, 1928, 1929/PL

Quicklag® Ground Fault Circuit Breakers

Types P and B Single Pole

AB DE-ION® Circuit Breakers

Type P Plug-in, Single Pole Only

Terminals, Load Side Only

Type Terminal	Breaker Amperes	Wire Type and Size
Pressure	15-25	#14-#10 Cu. #12 #8 AL
Pressure	30	#14-# 4 Cu. # 8-#4 AL

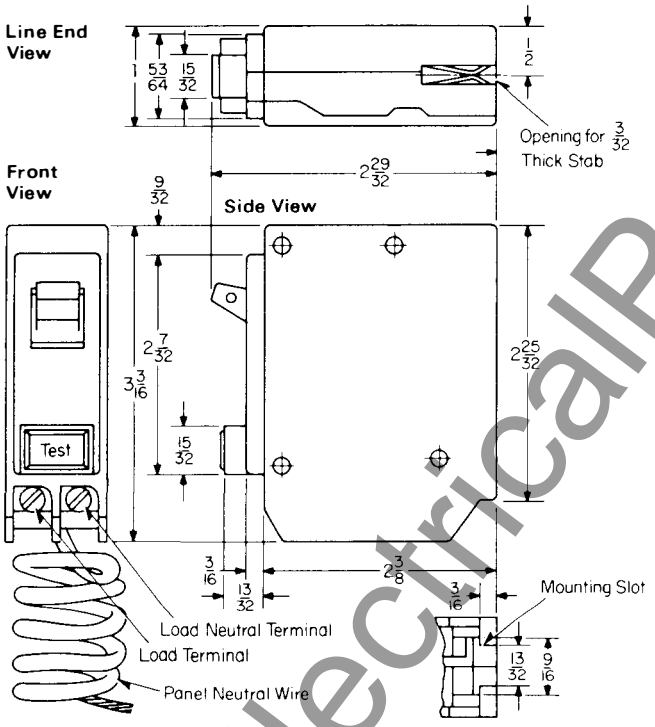

Type B Bolt-on, Single Pole Only

Terminals, Load Side Only

Type Terminal	Breaker Amps	Wire Type and Size
Pressure	15-25	#14-#10 Cu. #12-#8 AL
Pressure	30	#14-# 4 Cu. # 8-#4 AL

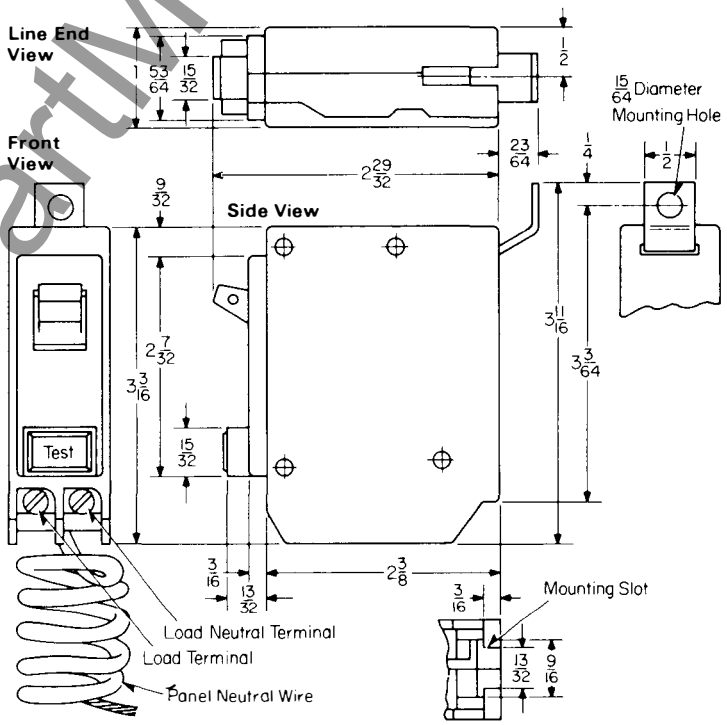

www . ElectricalPartManuals . com

www.ElectricalPartManuals.com

Printed in U.S.A.

Westinghouse Electric Corporation
Low Voltage Breaker Division
Beaver, Pennsylvania 15009

October, 1977
Supersedes Dimension Sheet 29-170
all previous issues.
Mailed to: E, D, C/1901, 1928, 1929/PL

Quicklag® Ground Fault Circuit Breakers

Page 5: Type P Plug-in, Two Pole
Page 6: Type B Plug-in, Two Pole

AB DE-ION® Circuit Breakers

Type P Plug-in, Two Pole Only

Terminals, Load Side Only

Type Terminal	Breaker Amperes	Wire Type and Size
Pressure	15-25	#14-#10 Cu. #12-#8 AL
Pressure	30	#14-# 4 Cu. # 8-#4 AL

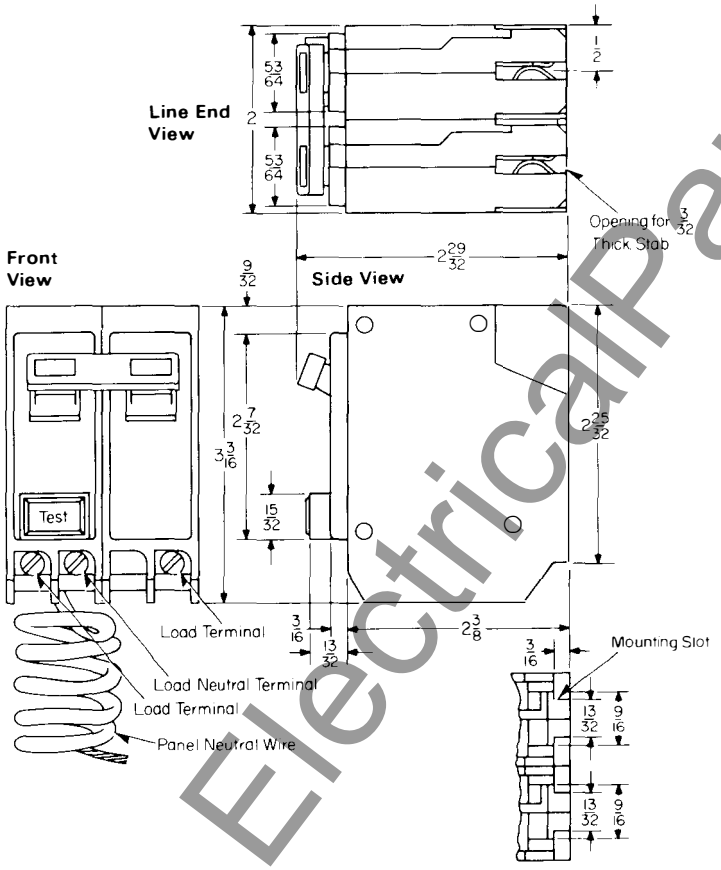

www . ElectricalPartManuals . com

Type B Bolt-on, Two Pole Only

Terminals, Load Side Only

Type Terminal	Breaker Amps	Wire Type and Size
Pressure	15-25	#14-#10 Cu, #12-#8 AL
Pressure	30	#14-# 4 Cu, # 8-#4 AL

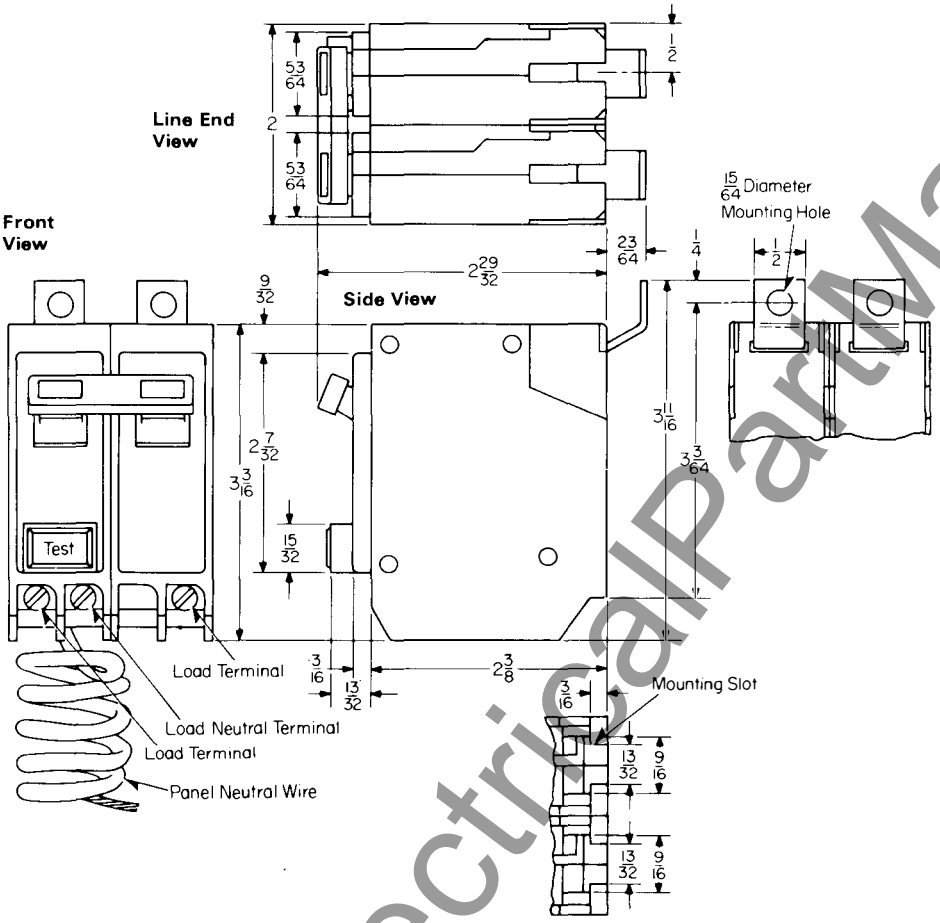

Westinghouse Electric Corporation
Low Voltage Breaker Division
Beaver, Pennsylvania 15009

Printed in U.S.A.

www.ElectricalPartManuals.com

July, 1985
Supersedes Dimension Sheet 29-170, pages 9-10, dated October, 1977.
Mailed to: E, D, C/29-100A

Quicklag® Plug-in Circuit Breakers

Page 9: Types HQP, QPH, QHP Single Pole
Page 10: Type HQP, QPH, QHP Two and Three Poles

AB DE-ION® Circuit Breakers

Type HQP, QPH, QHP Single Pole Breakers

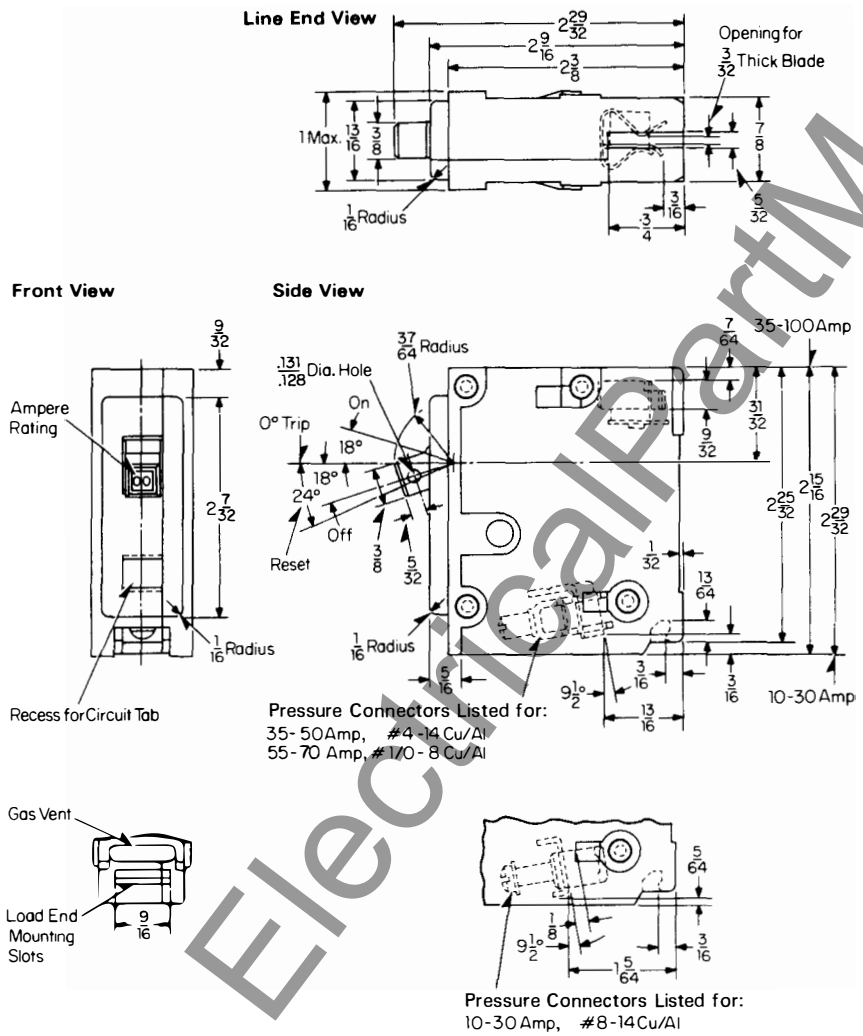

Reproduced from Drawing 1253C37, 1251C81

www . ElectricalPartManuals . com

AB DE-ION Circuit Breakers

Type HQP Two and Three Pole Breaker

Line End View
(3 Pole)

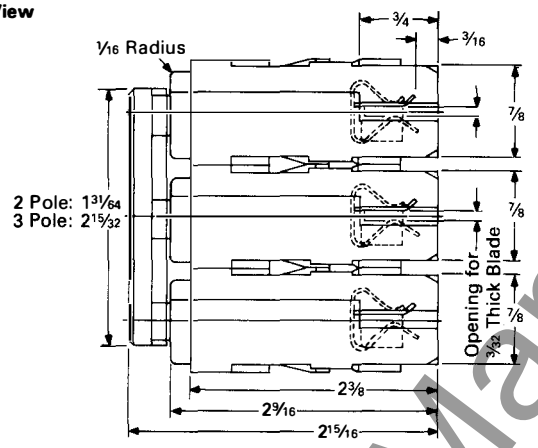

Front View
(2 Pole)

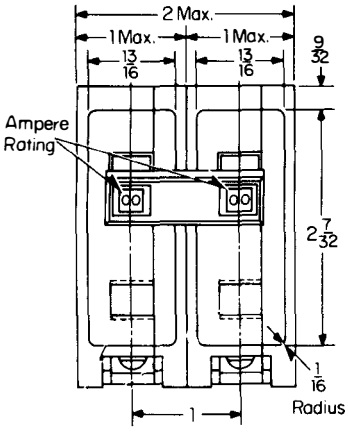

Front View
(3 Pole)

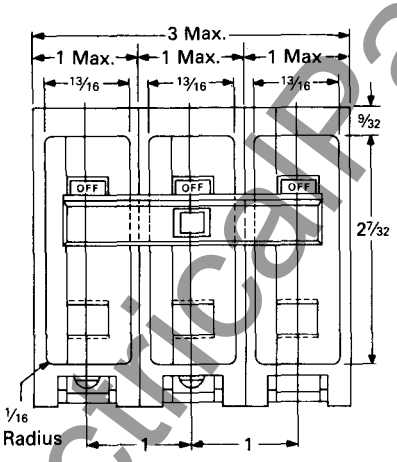

Side View
(2, 3 Pole)

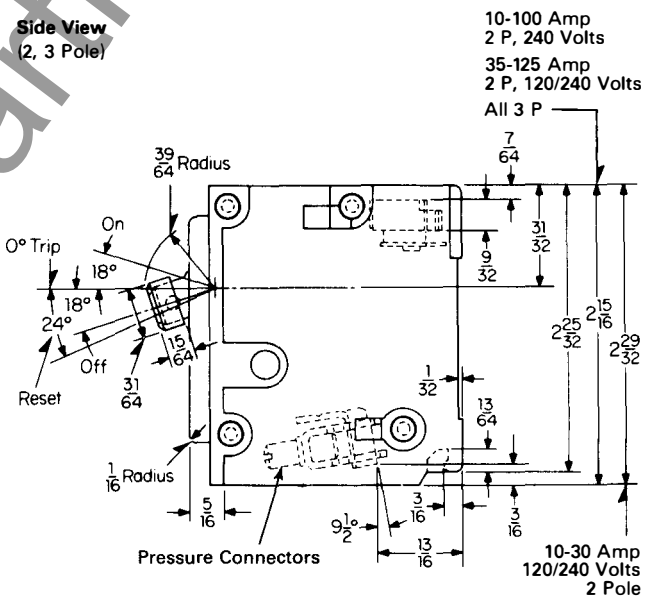

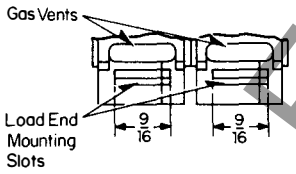

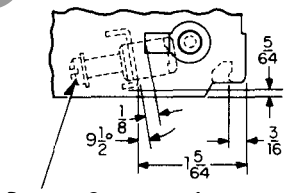

Pressure Connectors for
10-30 Amps, 120/240 Volts

Wire Sizes for Pressure Connectors

Poles	Amps	Volts	Wire Size, Type
2	10-30	120/240	#8-#14 Cu/Al
2	35-50	120/240	#4-#14 Cu/Al
2	55-125	120/240	1/0-#8 Cu/Al
2, 3	10-50	240	#4-#14 Cu/Al
2, 3	55-100	240	1/0-#8 Cu/Al

Reproduced from Drawings 1251C82, 1253C39, 2612D61

Westinghouse Electric Corporation
Distribution and Protection Business Unit
Commercial Division – Components
Beaver, Pennsylvania 15009

Printed in USA

www.ElectricalPartManuals.com

July, 1985
Supersedes Dimension Sheet 29-170, pages 13-14, dated October, 1977.
Mailed to: **E, D, C/29-100A**

Quicklag® Bolt-on and Type BA Circuit Breakers

Page 13: Type BAB, HBA, QBH Single Pole
Page 10: Type BAB, HBA, QBH Two and Three Poles

AB DE-ION® Circuit Breakers

Type BAB, HBA, QBH Single Pole Breakers

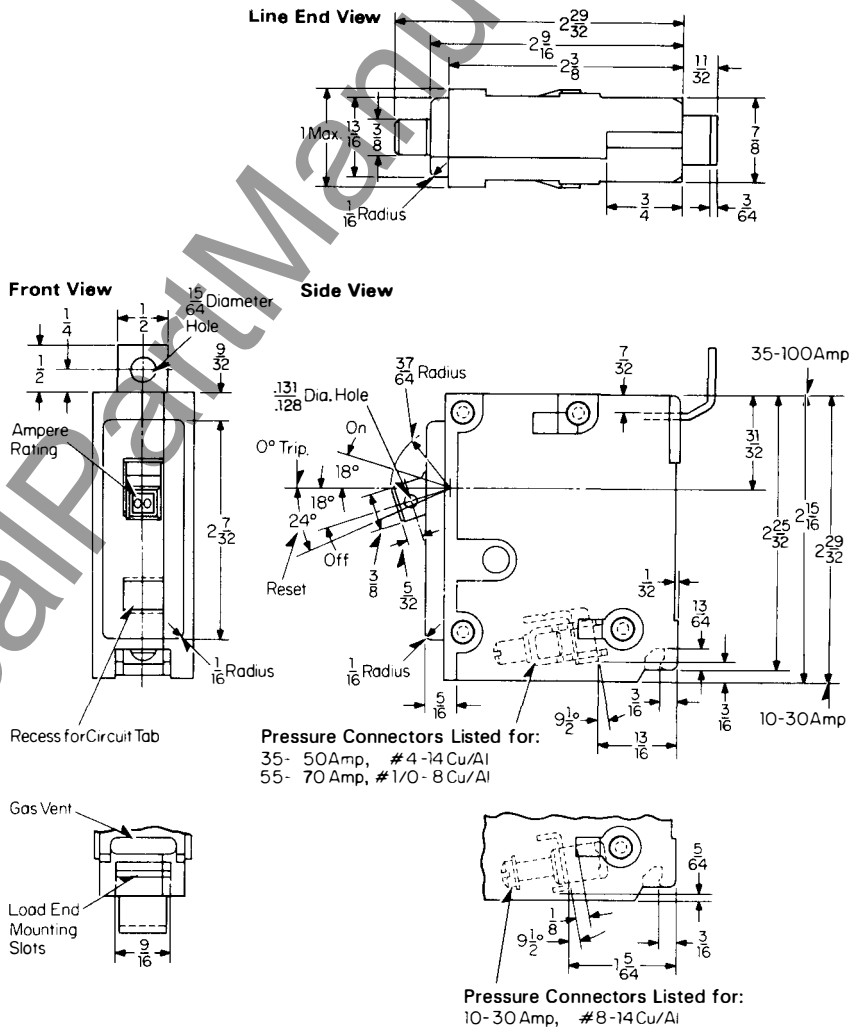

Reproduced from Drawing 1251C91, 1253C38

www . ElectricalPartManuals . com

AB DE-ION Circuit Breakers

Type BAB, HBA, QBH Two Pole Breakers

Line End View
(3 Pole)

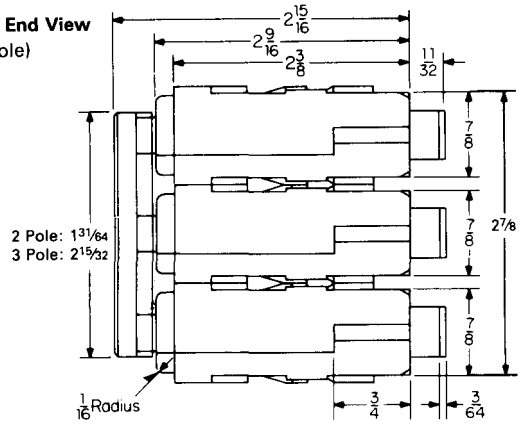

Front View
(2 Pole)

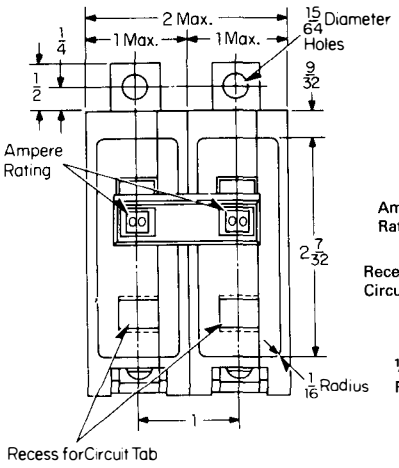

Front View
(3 Pole)

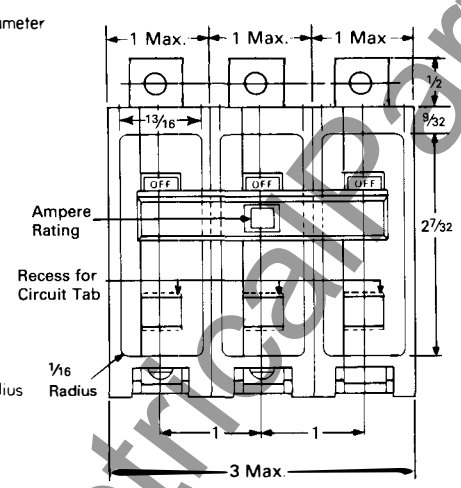

Side View
(2 and 3 Pole)

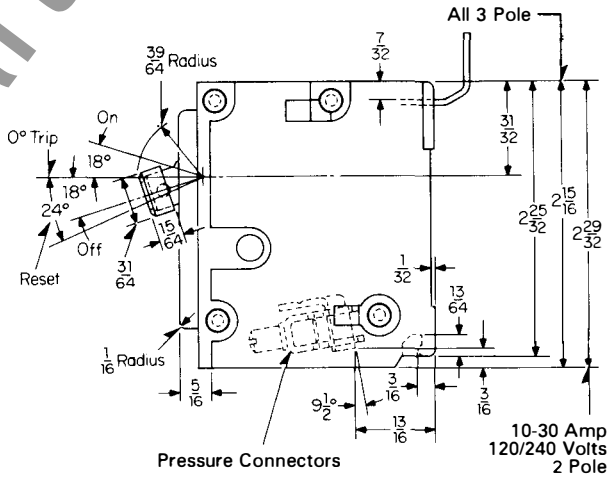

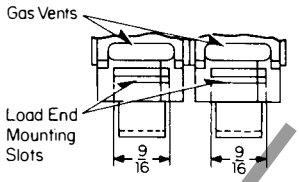

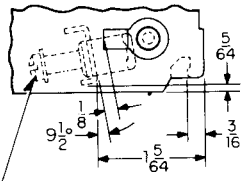

Pressure Connectors for
10-30 Amp, 120/240 Volts

Wire Sizes for Pressure Connectors

Poles	Amps	Volts	Wire Size, Type
2	10-30	120/240	#8-#14 Cu/Al
2	35-50	120/240	#4-#14 Cu/Al
2	55-100	120/240	1/0-#8 Cu/Al
2, 3	10-50	240	#4-#14 Cu/Al
2, 3	55-100	240	1/0-#8 Cu/Al

Reproduced from Drawings 1251C92, 1253C40, 2612D62

Westinghouse Electric Corporation
Distribution and Protection Business Unit
Commercial Division – Components
Beaver, Pennsylvania 15009

Printed in USA

www.ElectricalPartManuals.com

October, 1977
Supersedes Dimension Sheet 29-170
all previous issues.
Mailed to: E, D, C/1901, 1928, 1929/PL

Quicklag® Bolt-on Circuit Breakers

Page 17: Type QC Single Pole
Page 18: Type QC Two Poles

AB DE-ION® Circuit Breakers

Type QC Single Pole Breaker

Applies to The Following Type Breakers:

QC 1 Pole 10,000 Amp I C. 10-70 Amp

Line End View

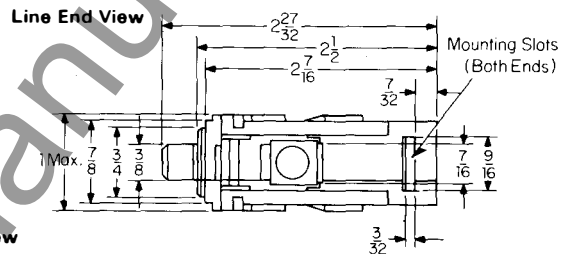

Front View

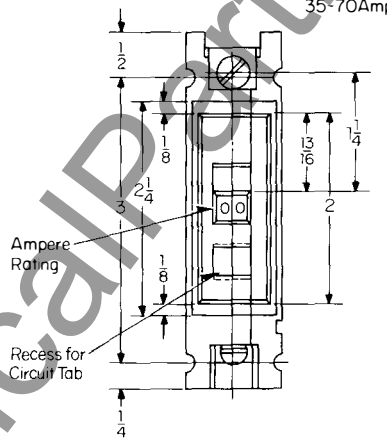

Side View

Connector Approved for:
10-30 Amp, #14-8 Cu/Al
35-70Amp, #14-4 Cu, #12-2 Al

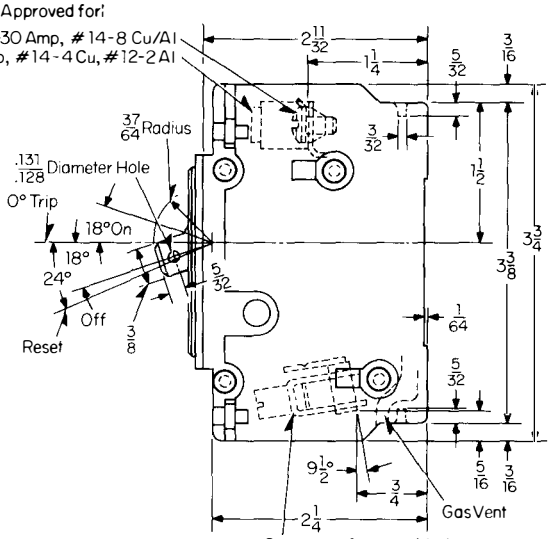

Connector Approved for:
25-50Amp, #14-4 Cu, #8-4 Al
55-70Amp, # 8-2 Cu, #6-2 Al

Face Mounting Plate
Style Number 1258C07G01
(For Above Style Breakers Only)

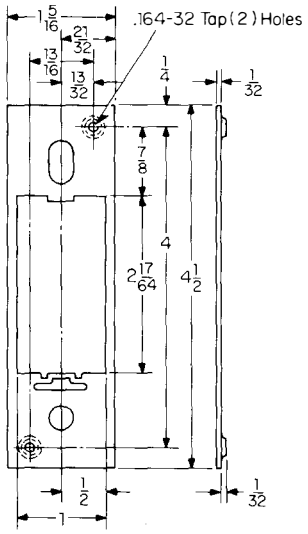

Connector Approved for:
10-20 Amp, #14-10 Cu/Al

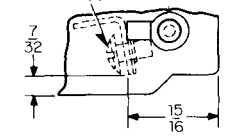

10-15 and 20Amp

Reproduced from Drawing 1257C40

www . ElectricalPartManuals . com

Type QC Two Pole Breaker

Applies to The Following Type Breaker:

QC 2 Pole 120/240 Volt 10,000 Amp I.C 10-100 Amp

Line End View (2 Pole)

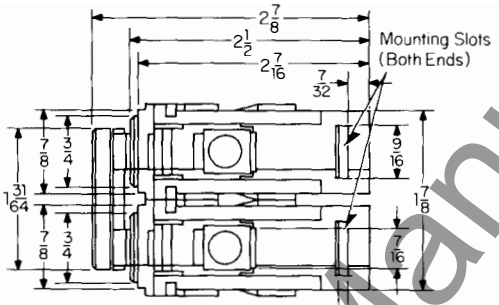

Front View
(2 Pole)

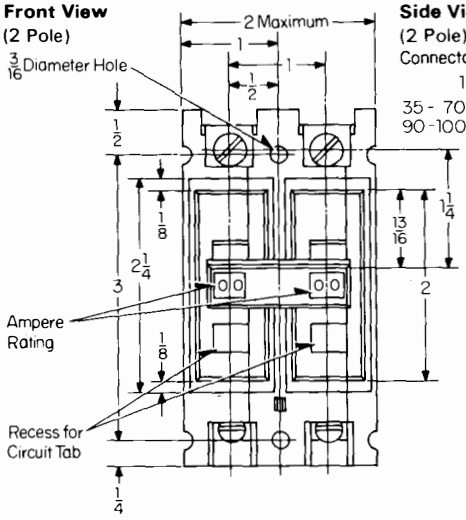

Side View
(2 Pole)

Connector Approved for:
10 - 30 Amp, #14-8 Cu/Al
35 - 70 Amp, #14-4 Cu, #12-2 Al
90-100 Amp, # 6-1 Cu/Al

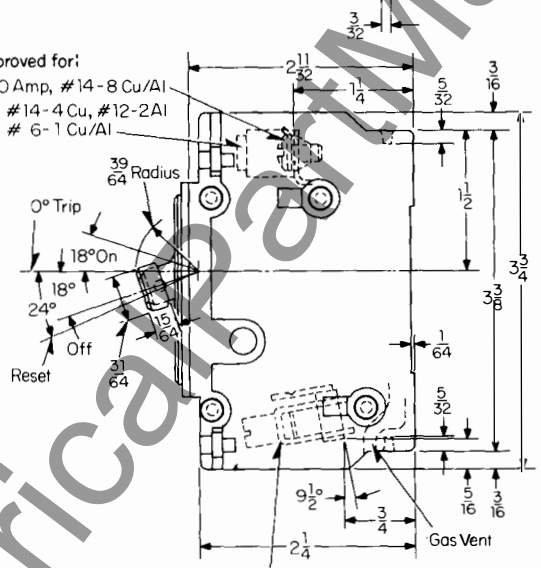

Connector Approved for:
10 - 20 Amp, #14-10 Cu/Al
25 - 50 Amp, #14- 4 Cu/Al
55-100 Amp, # 8-1/0 Cu/Al

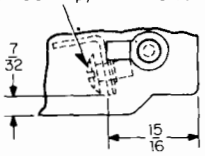

10-15 and 20 Amp

Face Mounting Plate
Style Number 1265C83G01
(For Above Style Breakers Only)

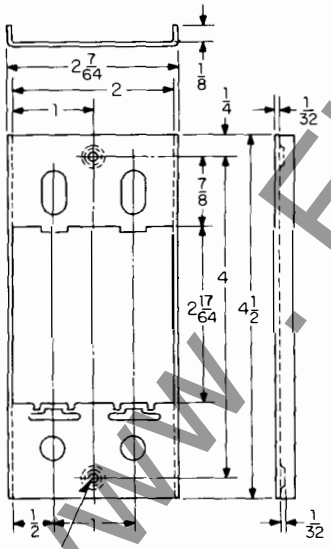

.164-32 Tap (2) Holes

Reproduced from Drawing 1257C50

www.ElectricalPartManuals.com

Printed in U.S.A.

July, 1985
Supersedes Dimension Sheet 29-170, pages 17-18, dated October, 1977.
Mailed to: E, D, C/29-100A

Quicklag® Bolt-on Circuit Breakers

Page 17: Type QC, QCH, QHC Single Pole
Page 18: Type QC, QCH, QHC Two and Three Poles

AB DE-ION® Circuit Breakers

Type QC, QCH, QHC Single Pole Breaker

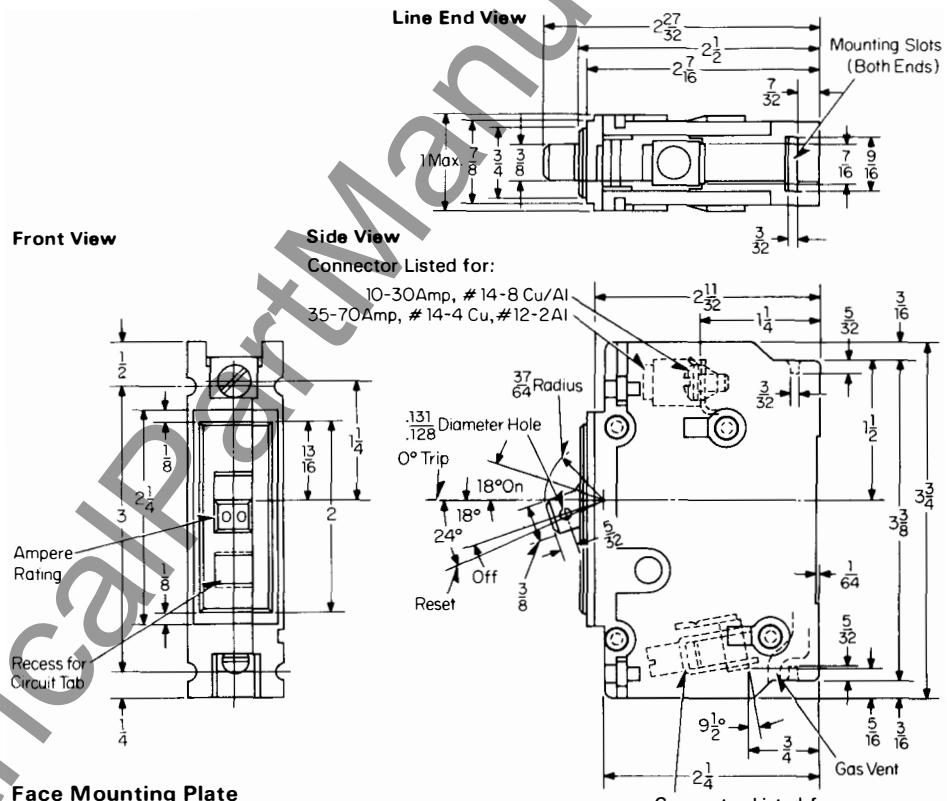

Face Mounting Plate
Style Number 1258C07G01
(For Above Style Breakers Only)

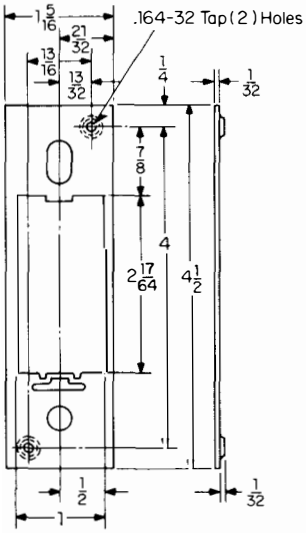

Connector Listed for:
10-20 Amp, #14-10 Cu/Al

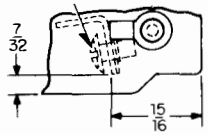

10-15 and 20 Amp

Reproduced from Drawing 1257C40

www . ElectricalPartManuals . com

AB DE-ION Circuit Breakers

Type QC, QCH, QHC Two and Three Pole Breakers©

Line End View
(3 Pole)

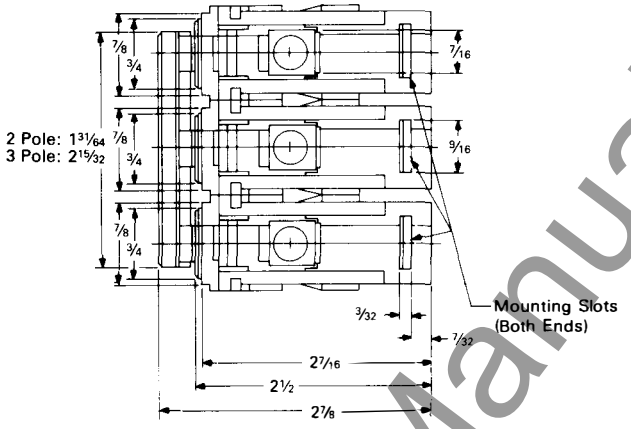

Front View
(2 Pole)

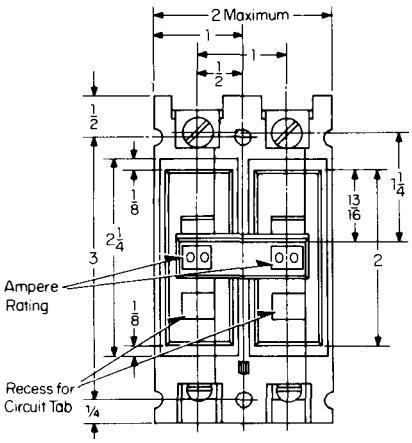

Front View
(3 Pole)

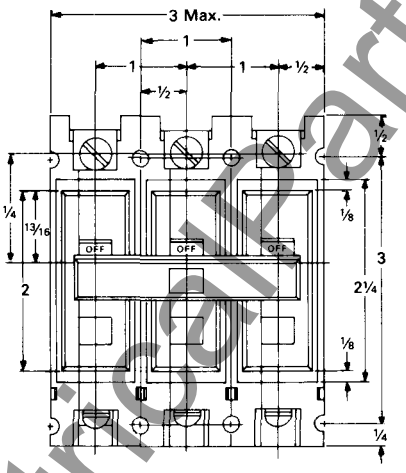

Side View
(2 Pole)

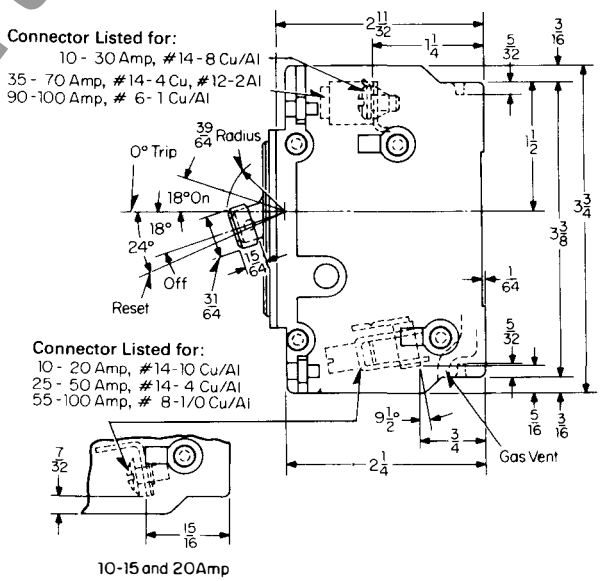

Face Mounting Plate
Style Number 1265C83G02 – 2 Pole
Style Number 1265C83G03 – 3 Pole
(For Above Style Breakers Only)

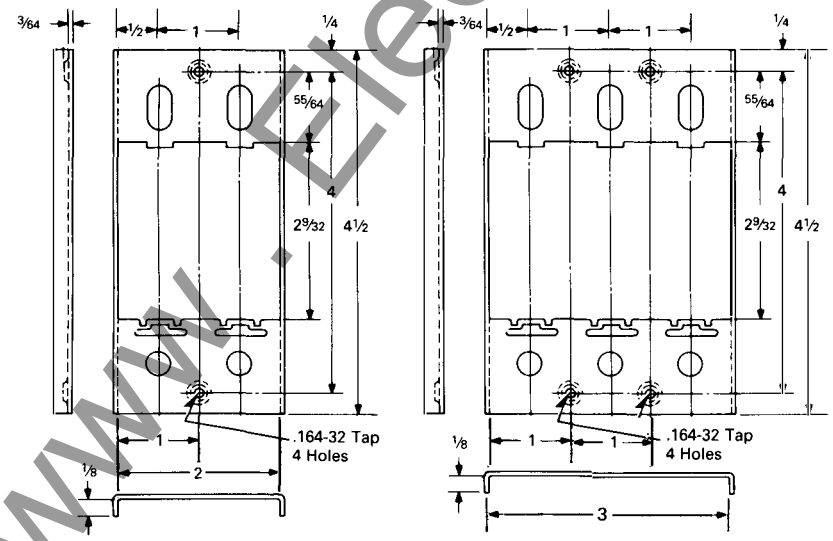

Base Mounting Plate (For All Type "C" Breakers)

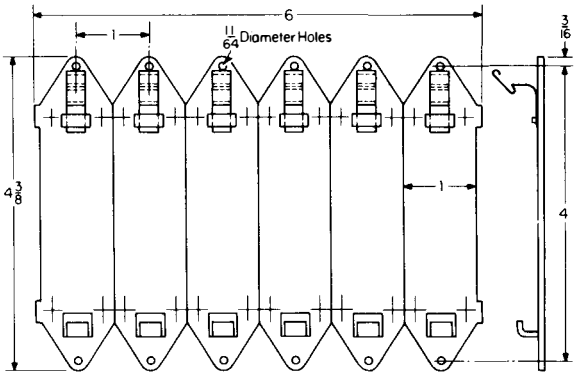

Mounting Plate Style Number 207B513G01 Maximum of Six 1-Poles, Three 2-Poles or Two 3-Poles; Plates May be Separated When Necessary

Reproduced from Drawings 1257C50, 2612D63

Printed in USA

www.ElectricalPartManuals.com

July, 1982
New Information
Mailed to: E, D, C/1901, 1928, 1929/PL

Type GB, Type GBH Bolt-on Panelboard Circuit Breakers

Page 18.1: Type GB, GBH One Pole
Page 18.2: Type GB, GBH Two Pole

AB DE-ION® Circuit Breakers

Type GB, GBH Bolt-on, One Pole Only

Terminals, Load Side Only

Type Terminal	Breaker Amperes	Wire Type and Size
Clamp	15-20	#14-#10 Cu/Al
Pressure	25-100	#10-1/O Cu/Al

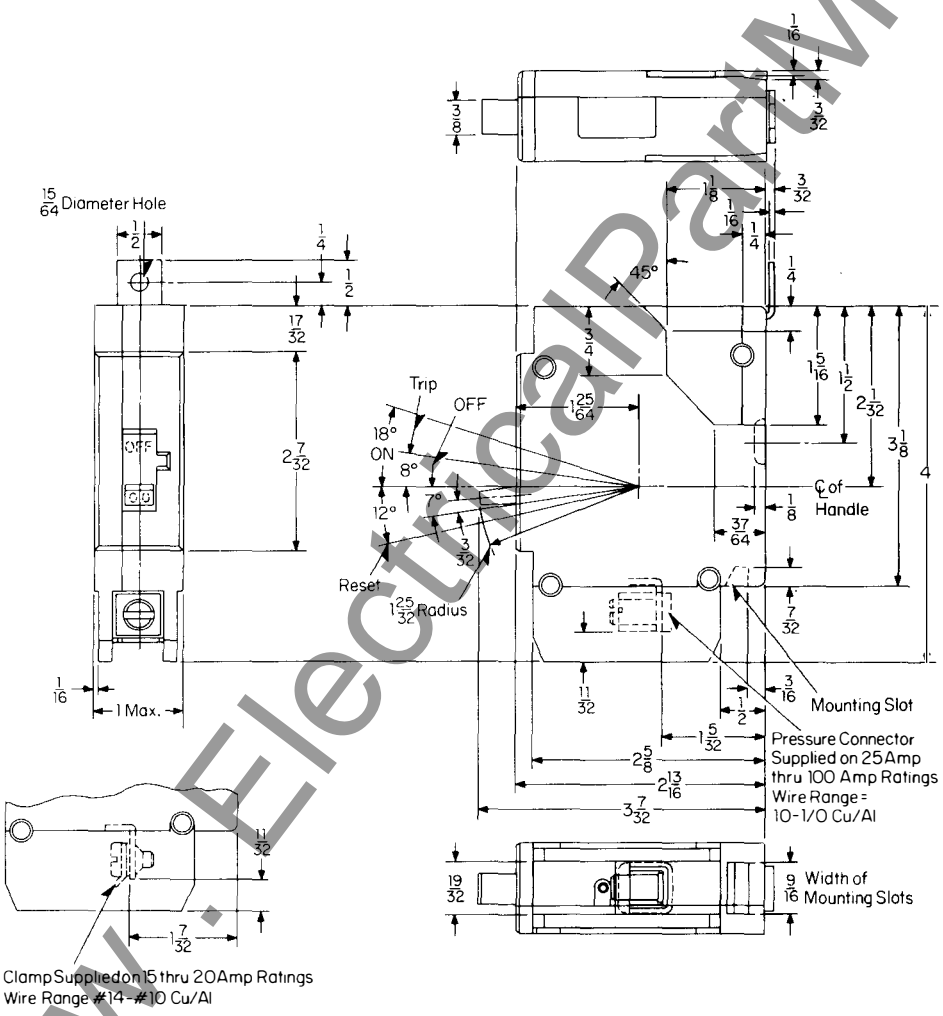

Reproduced From Drawing 1372D97

www.ElectricalPartManuals.com

Type GB, GBH Bolt-on, Two Pole Only

Terminals, Load Side Only

Type Terminal	Breaker Amps	Wire Type and Size
Clamp Pressure	15-20	#14-#10 Cu/Al
	25-100	#10-1/O Cu/Al

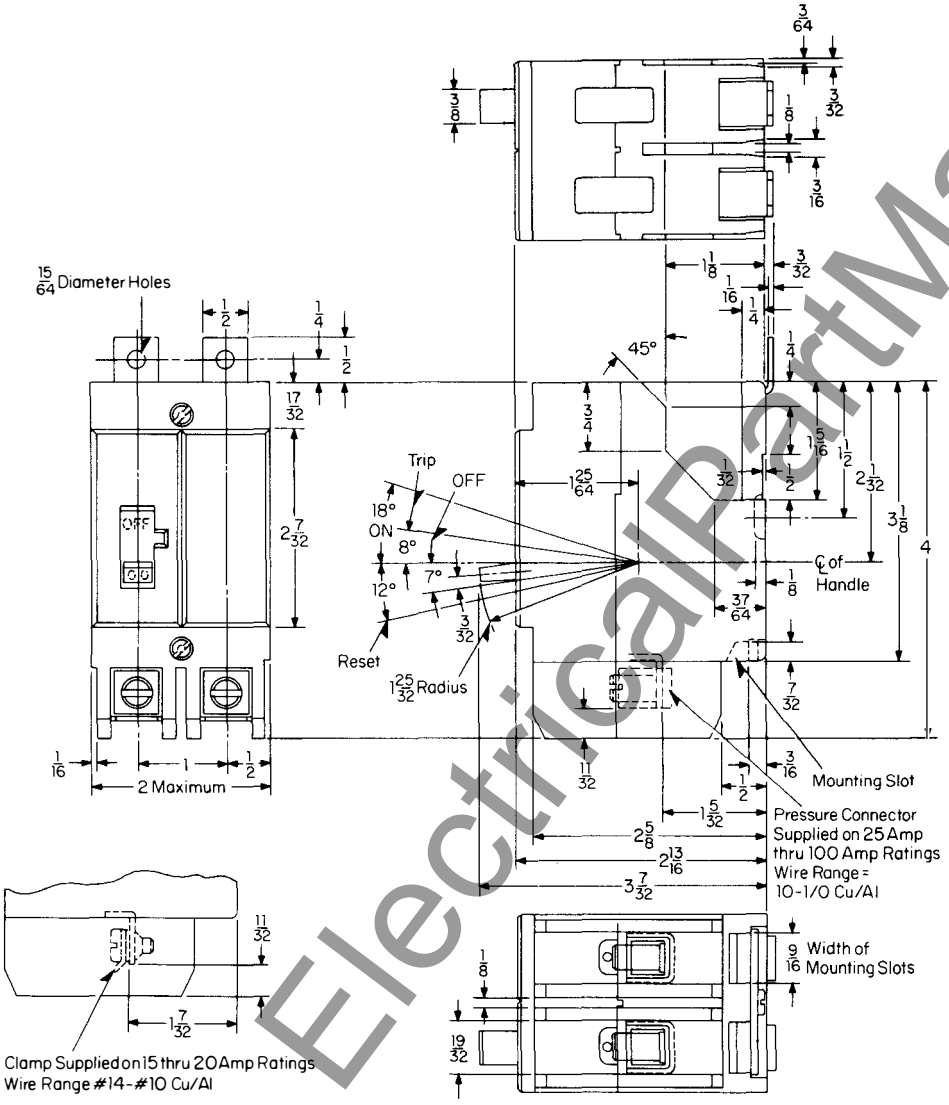

Reproduced From Drawing 1373D57

Westinghouse Electric Corporation
Low Voltage Breaker Division
Beaver, Pennsylvania 15009

Printed in USA

www.ElectricalPartManuals.com

July, 1987
Supersedes Dimension Sheet 29-170, pages 18.3-18.4, dated July, 1982
Mailed to: E, D, C/29-100A, 31-400A, 31-500A

Type GB, Type GHB Bolt-on Panelboard Circuit Breakers
Type GHBS Circuit Breaker

Page 18.3: Type GB, GHB Bolt-on Three Pole
Page 18.4: Type GHBS One Pole

AB DE-ION® Circuit Breakers

Type GB, GHB Bolt-on Three Pole Breakers

Terminal Arrangements, Load Side Only

Type	Ampere Rating	Wire Type and Size
Clamp Pressure	15-20	#14-#10 Cu/Al
	25-100	#10-1/0 Cu/Al

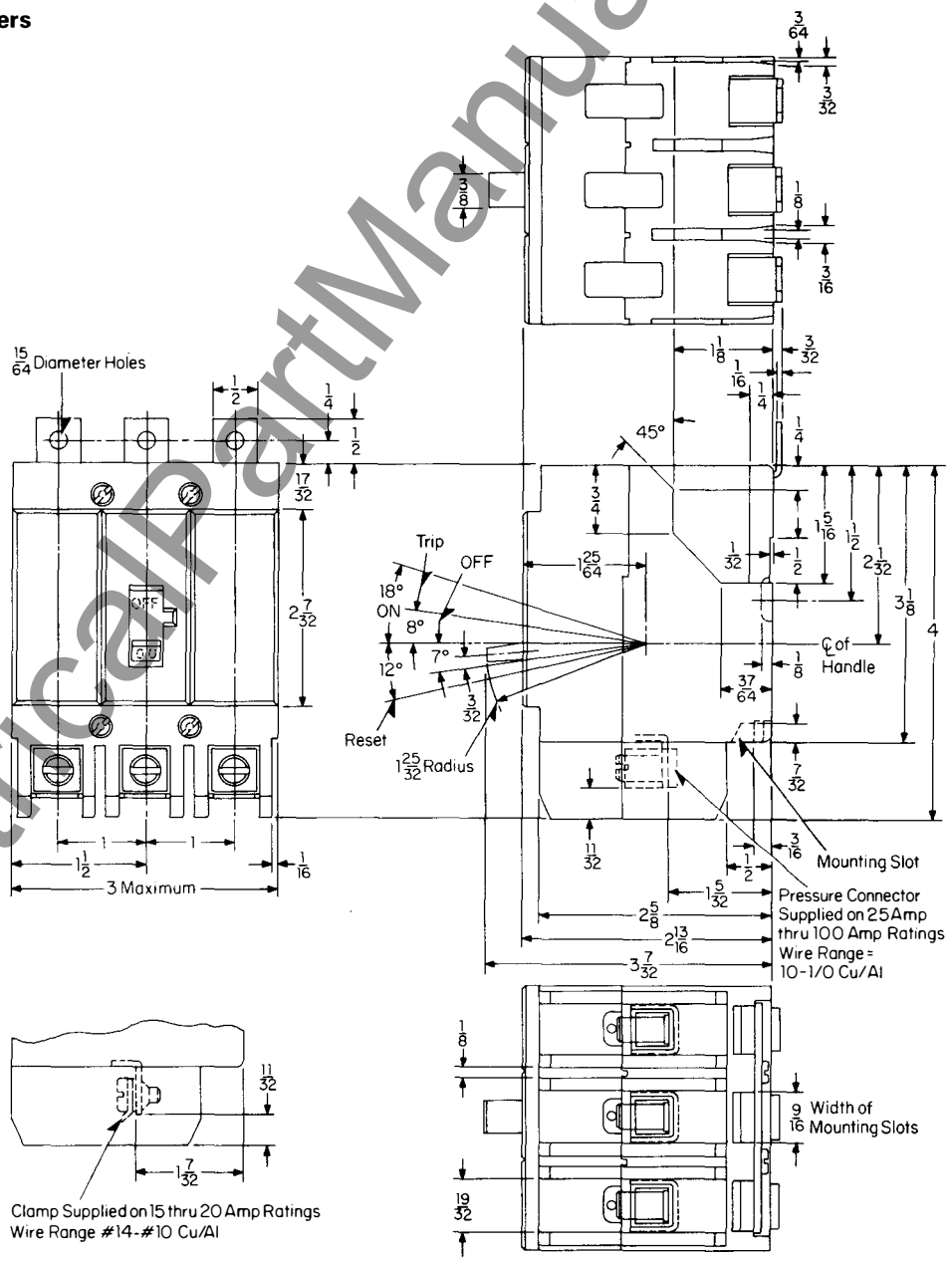

Reproduced From Drawing 1370D84

www . ElectricalPartManuals . com

AB DE-ION® Circuit Breakers

Type GHBS, One Pole Only

Terminals, Load Side Only

Type Terminal	Breaker Amperes	Wire Type and Size
Clamp	15-20	#14-#10 Cu/Al

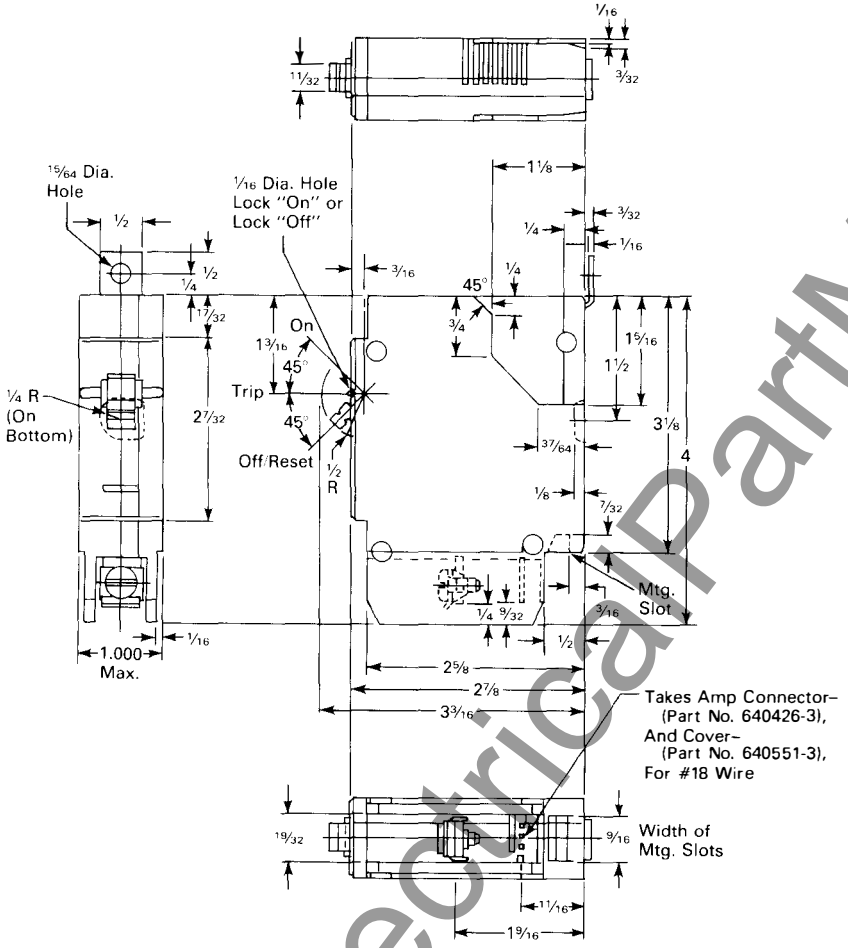

Reproduced From Drawing 2613D06

Westinghouse Electric Corporation
Distribution and Control Business Unit
Electrical Components Division
Pittsburgh, Pennsylvania, U.S.A. 15220

Printed in USA

www.ElectricalPartManuals.com

July, 1987
New Information
Mailed to: E, D, C/29-100A, 31-400A

Type GC, Type GHC Circuit Breakers

Page 18.5: Type GC, GHC One Pole
Page 18.6: Type GC, GHC Two Pole

AB DE-ION® Circuit Breakers

Type GC, GHC One Pole Only

Suitable for Cable Mounting, Line and Load
Terminal Arrangements, Line and Load

Type	Ampere Rating	Wire Type and Size
Clamp and Binding Screw	15, 20	#14-10 Cu/Al
Pressure Collar	25-100	#10-I/O Cu/Al

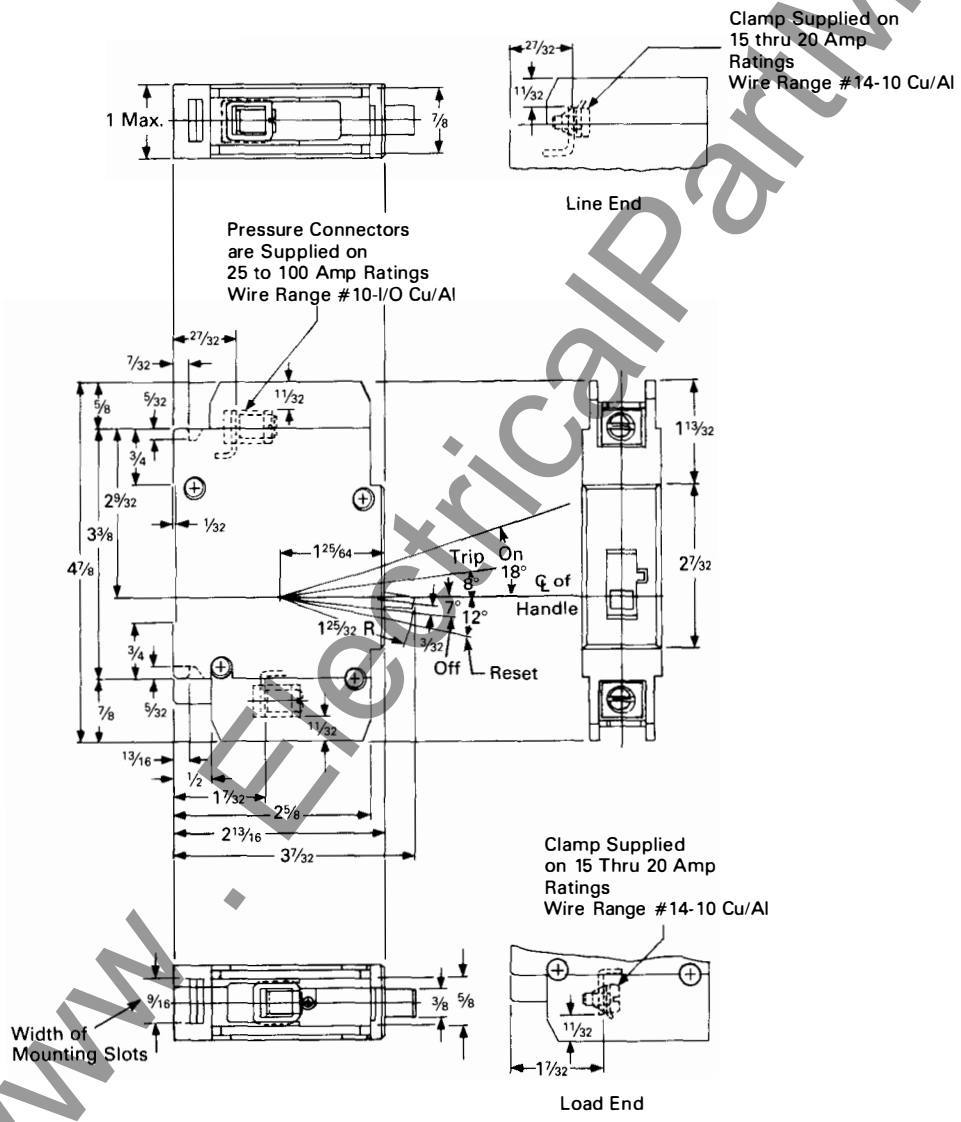

Reproduced From Drawing 1374D14

www.ElectricalPartManuals.com

AB DE-ION® Circuit Breakers

Type GC, GHC Two Pole Only

Suitable for Cable Mounting, Line and Load Terminals, Load and Load Side

Type Terminal	Breaker Amps	Wire Type and Size
Clamp and Binding Screw	15-20	#14-#10 Cu/Al
Pressure Collar	25-100	#10-I/O Cu/Al

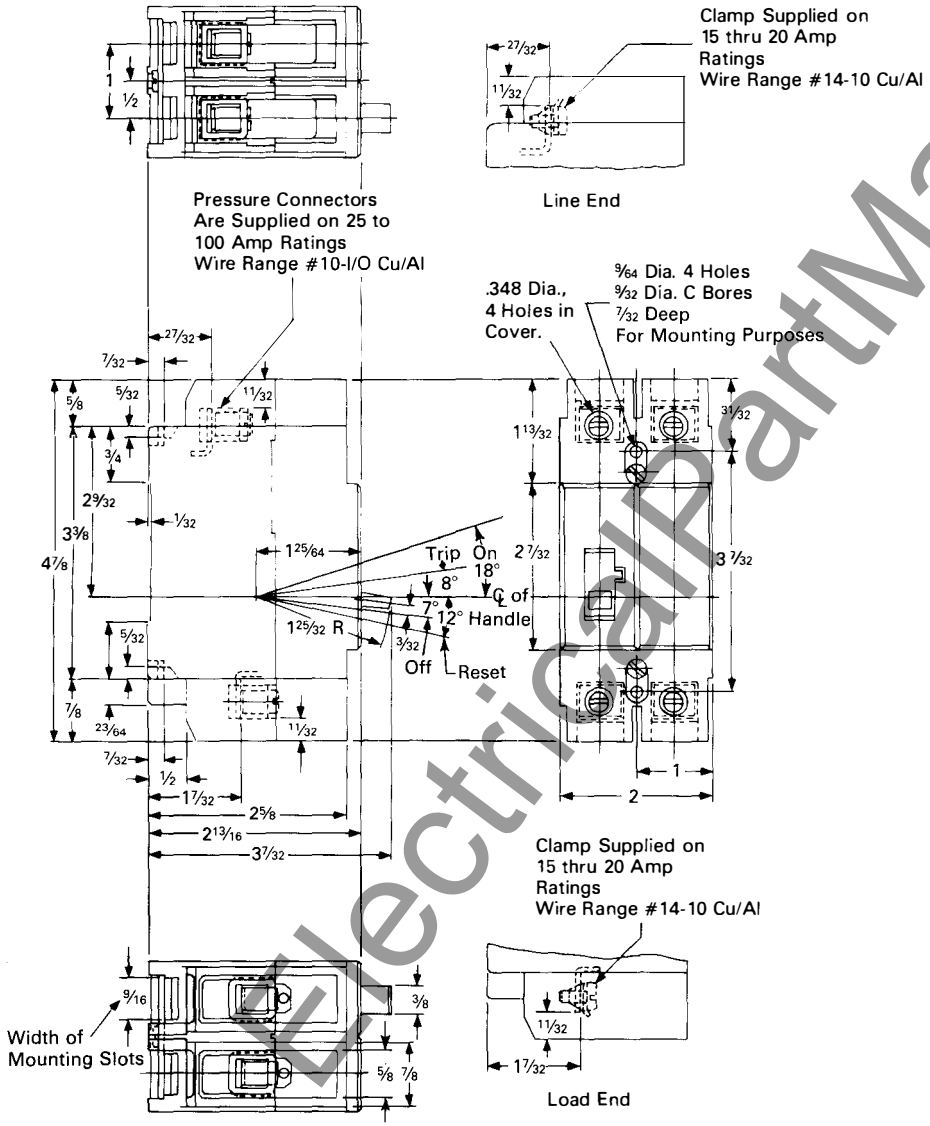

Reproduced From Drawing 1374D15

Westinghouse Electric Corporation
Distribution and Control Business Unit
Electrical Components Division
Pittsburgh, Pennsylvania, U.S.A. 15220

Printed in USA

www.ElectricalPartManuals.com

July, 1987
New Information
Mailed to: E, D, C/29-100A, 31-400A

Type GC, Type GHC Circuit Breakers

Page 18.7: Type GC, GHC Three Pole

AB DE-ION® Circuit Breakers

Type GC, GHC Three Pole Only

Suitable for Cable Mounting, Line and Load
Terminals, Load and Load Side

Type Terminal	Breaker Amps	Wire Type and Size
Clamp and Binding Screw	15-20	#14-#10 Cu/Al
Pressure Collar	25-100	#10-I/O Cu/Al

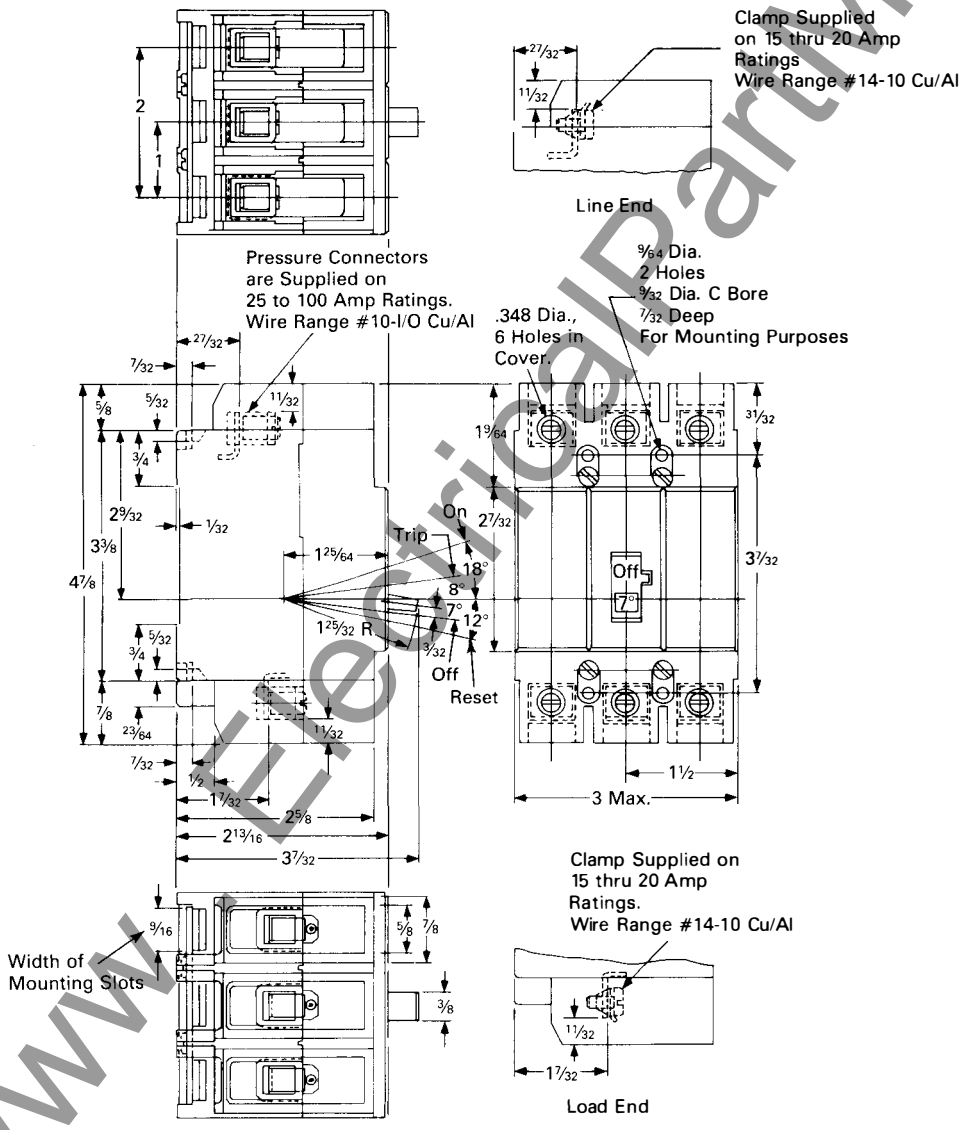

Reproduced From Drawing 1374D16

www.ElectricalPartManuals.com

AB DE-ION® Circuit Breakers

www . ElectricalPartManuals . com

Printed in U.S.A.

Westinghouse Electric Corporation
Distribution and Control Business Unit
Electrical Components Division
Pittsburgh, Pennsylvania, U.S.A. 15220

July, 1987

October, 1977
Supersedes Dimension Sheet 29-170
all previous issues.
Mailed to: E, D, C/1901, 1928, 1929/PL

Types EB, EHB, FB, MARK 75® HFB

Page 19: Outline Dimensions
Page 20: Drilling Plans

AB DE-ION® Circuit Breakers

Type EB, EHB, FB and MARK 75 HFB 1, 2, 3, 4 Pole Thermal Magnetic Breakers (See Note Below)

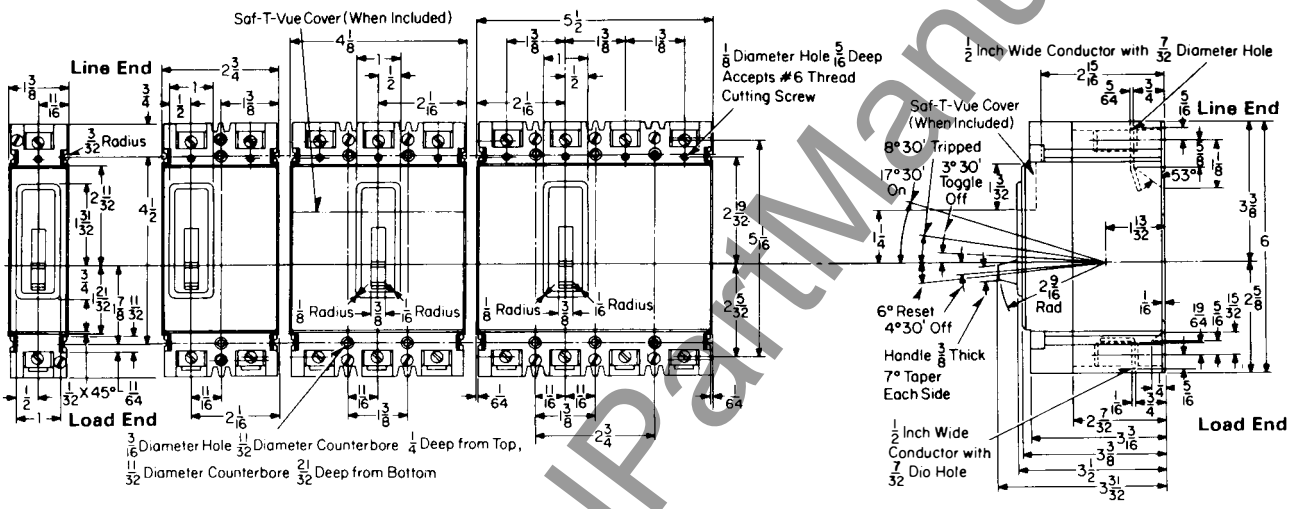

2 and 3 Pole FB and HFB Magnetic Only Breakers

Current carrying parts are omitted from center pole for 2-pole breakers.

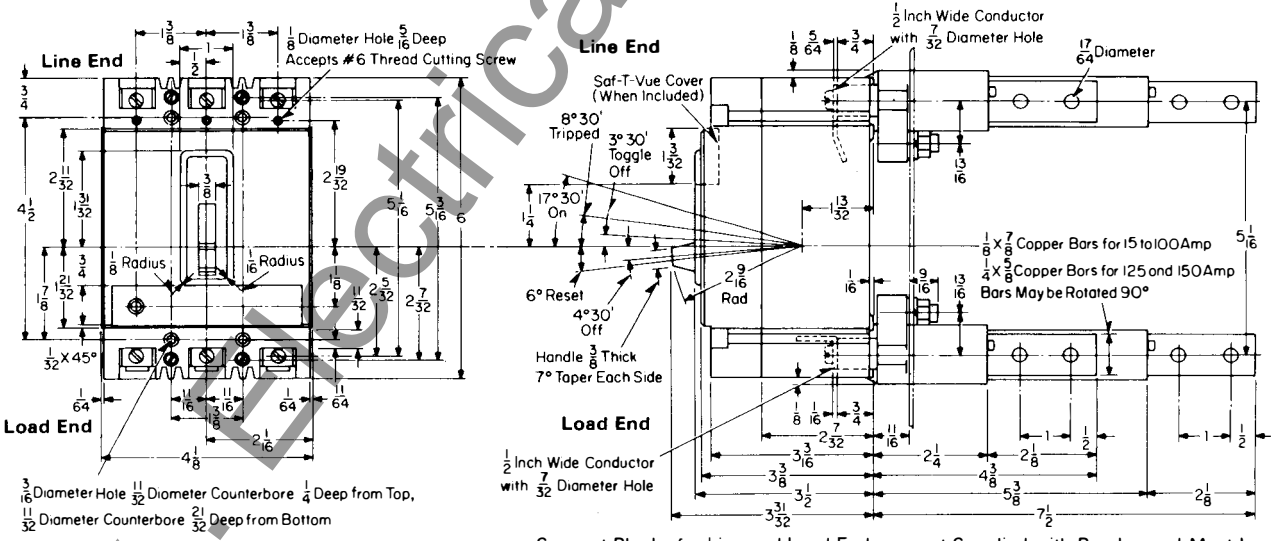

Note: Mark 75 HFB Thermal Magnetic Breakers
Two-pole breakers are furnished in three-pole frame with current carrying parts omitted from center pole

Support Blocks for Line and Load Ends are not Supplied with Breaker and Must be Ordered Separately. Refer to Drawing 506C144 When Ordering Support Blocks
All Parts Necessary to Convert a Standard Breaker are Included.

Plug-In and Bolt-On Detail

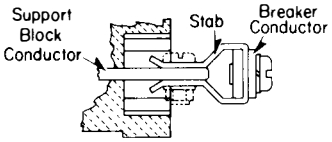

Plug-in
Bolt stab to breaker conductor, then plug into support block.

Bolt-on
Bolt stab to support block, then bolt support block assembly to breaker conductors.

Reproduced From Drawing 4967D20, 4967D30, 4985D60 and 4979D66

www.ElectricalPartManuals.com

Drilling Plans for Type EB, EHB, FB and MARK 75 Type HFB Breaker

Drilling Plans 1, 2 and 3 Pole

2 Pole Mark 75 and 2 Pole Magnetic Only Use 3 Pole Drilling

For Mounting Bolts

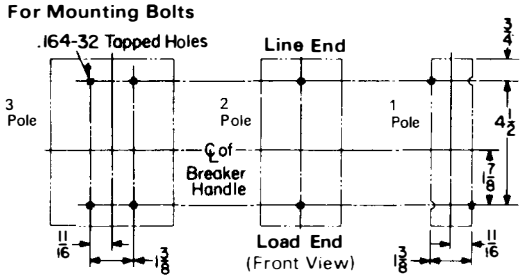

For Rear Connected Studs

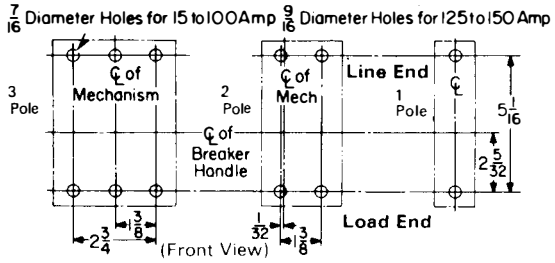

Plug-In Block

15 to 150 Amp 2 Pole Breakers (Thermal Magnetic)

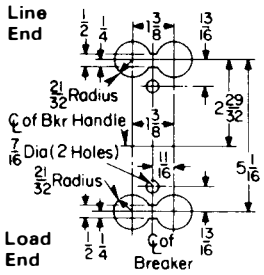

15 to 150 Amp 3 Pole Breakers, 2 Pole Magnetic Only, and Mark 75 Breakers

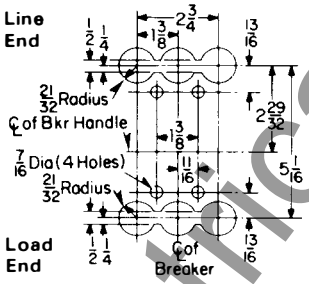

Front Cover Cutout

1, 2 and 3 Pole

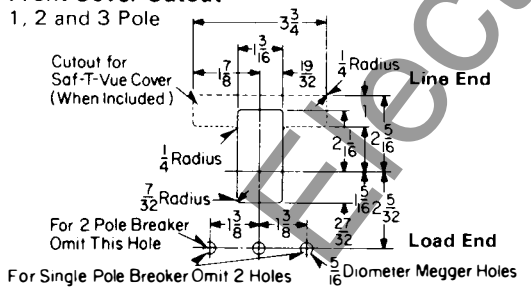

Front Cover Cutout

4 Pole

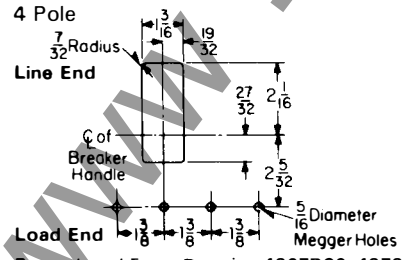

Reproduced From Drawing 4967D20, 4979D66 and 4967D30

Drilling Plans 4 Pole

For Mounting Bolts

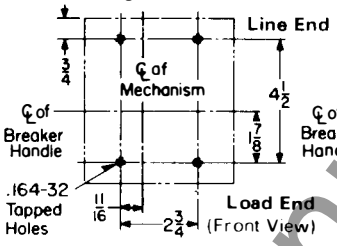

For Rear Connected Studs

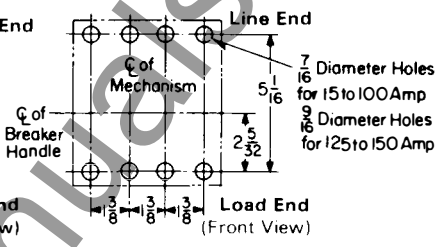

Terminal Arrangements

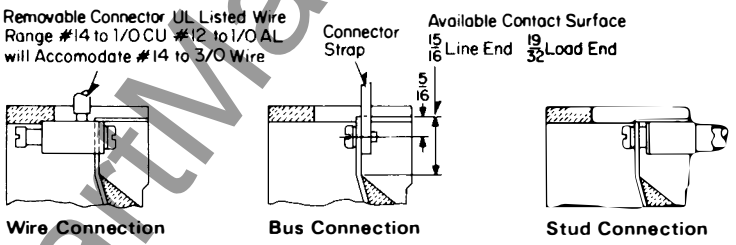

Rear Connected Studs

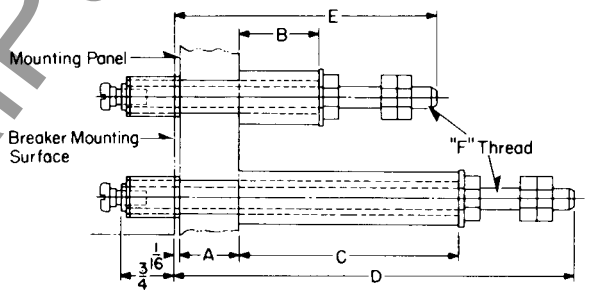

For 15 to 100 amp Breakers

Stud Ampere Rating	Stud Style Number	Panel Thickness A	Tube Length B	Tube Length C	Tube Style Number	D	E	F
100 A Short	451D874G01	1"	1 1/16		32B9446H20			
100 A Short	451D874G01	11/16 to 15/16	1 3/8		32B9446H21			
100 A Short	451D874G01	3/8 to 5/8	1 11/16		32B9446H22	6 1/8	3 5/8	5/16-18
100 A Short	451D874G01	1/4 to 5/16	2		32B9446H23			
100 A Long	451D874G02	1"		3 7/16	32B9446H24			
100 A Long	451D874G02	11/16 to 15/16		3 3/4	32B9446H25			
100 A Long	451D874G02	3/8 to 5/8		4 1/16	32B9446H26			
100 A Long	451D874G02	1/4 to 5/16		4 3/8	32B9446H27			

For 125 to 150 amp Breakers

150 A Short	374D883G01	1	1 1/16		374D883H06			
150 A Short	374D883G01	1/16 to 5/16	1 3/8		374D883H07			
150 A Short	374D883G01	3/8 to 5/8	1 11/16		374D883H08			7/16-14
150 A Short	374D883G01	1/4 to 5/16	2		374D883H09	7 1/2	4 1/4	
150 A Long	374D883G02	1		3 7/16	374D883H10			
150 A Long	374D883G02	11/16 to 15/16		3 3/4	374D883H11			
150 A Long	374D883G02	3/8 to 5/8		4 1/16	374D883H12			
150 A Long	374D883G02	1/4 to 5/16		4 3/8	374D883H13			

Ordering Instructions: Stud complete consists of one stud assembly and one tube as per chart. Order long and short studs and tubes as required to obtain proper bus spacing.

Printed in U.S.A.

www.ElectricalPartManuals.com

October, 1977
Supersedes Dimension Sheet 29-170
all previous issues.
Mailed to: E, D, C/1901, 1928, 1929/PL

Type LFB Current Limiting Attachment
for Type FB Circuit Breakers

AB DE-ION® Circuit Breakers

Type LFB Current Limiting Attachment

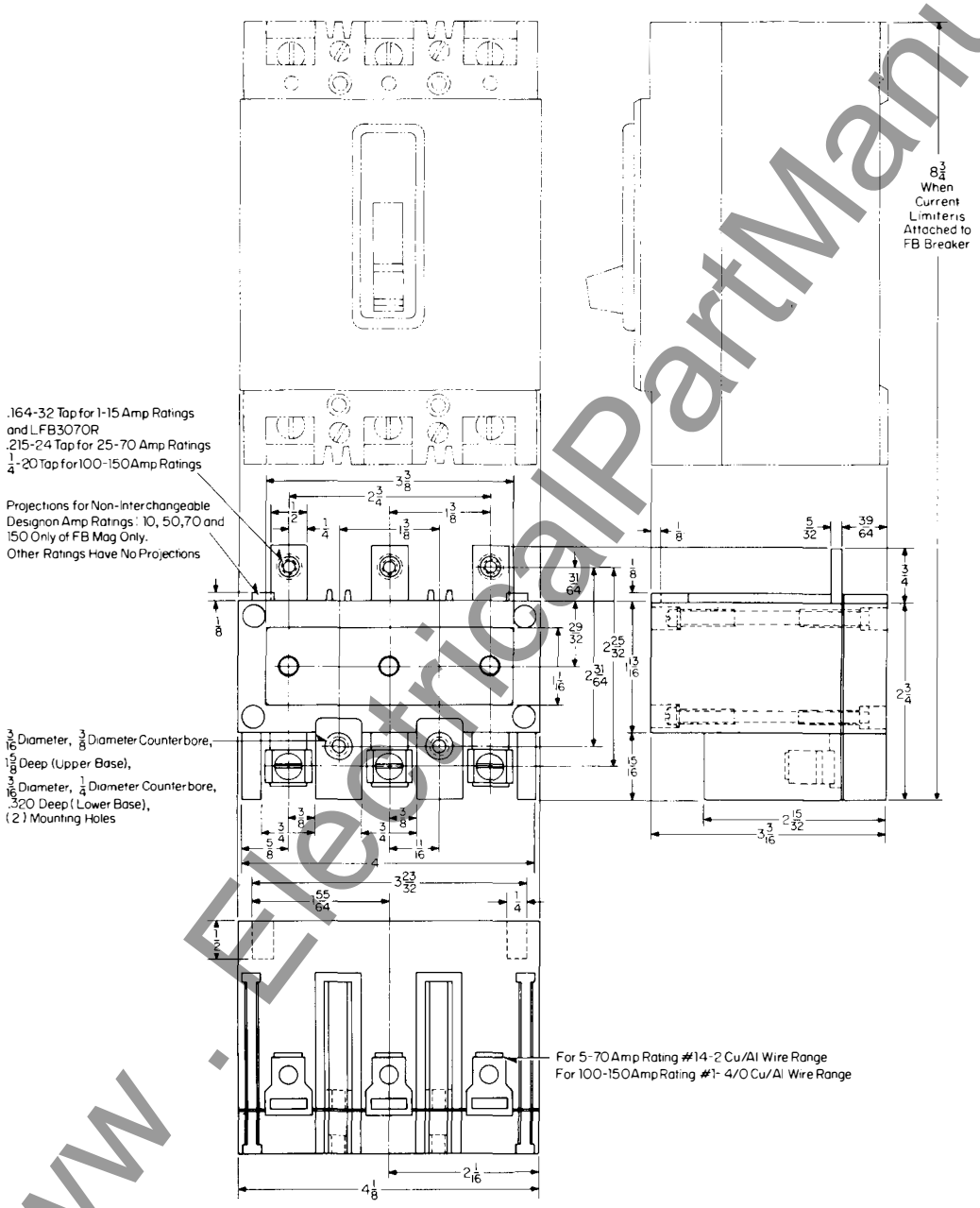

Reproduced From Drawing 5678D30

www.ElectricalPartManuals.com

www . ElectricalPartManuals . com

Printed in U.S.A.

Westinghouse Electric Corporation
Low Voltage Breaker Division
Beaver, Pennsylvania 15009

October, 1977
Supersedes Dimension Sheet 29-170
all previous issues.
Mailed to: E, D, C/1901, 1928, 1929/PL

Page 23: Types CA and CAH 225 Amperes
Page 24: Types JA, KA, MARK 75®
Type HKA 225 Amperes

AB DE-ION® Circuit Breakers

Type CA and CAH Breakers

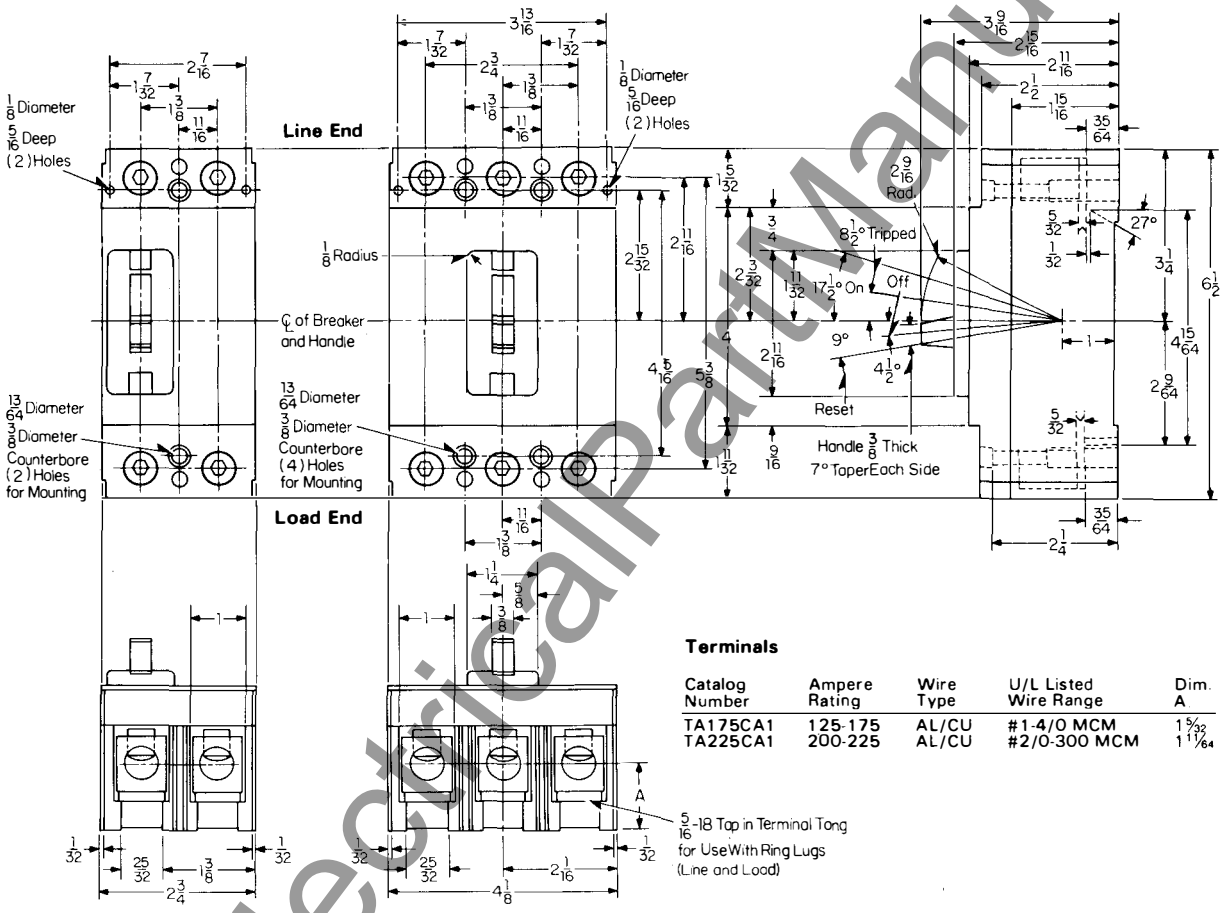

Terminals

Catalog Number	Ampere Rating	Wire Type	U/L Listed Wire Range	Dim. A
TA175CA1	125-175	AL/CU	#1-4/0 MCM	1 5/32
TA225CA1	200-225	AL/CU	#2/0-300 MCM	1 11/64

Drilling Plan

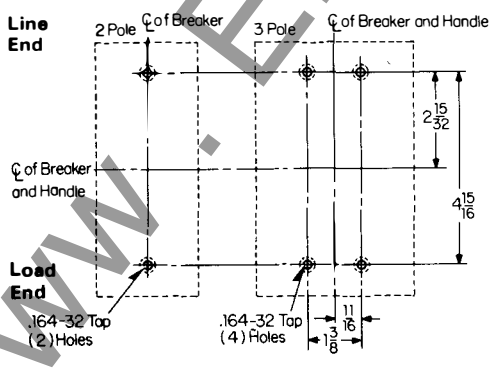

Front Cover Cutout

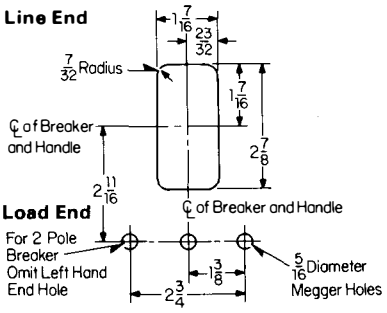

Reproduced From Drawing 374D130

www.ElectricalPartManuals.com

Type JA, KA and MARK 75® Type HKA Breakers

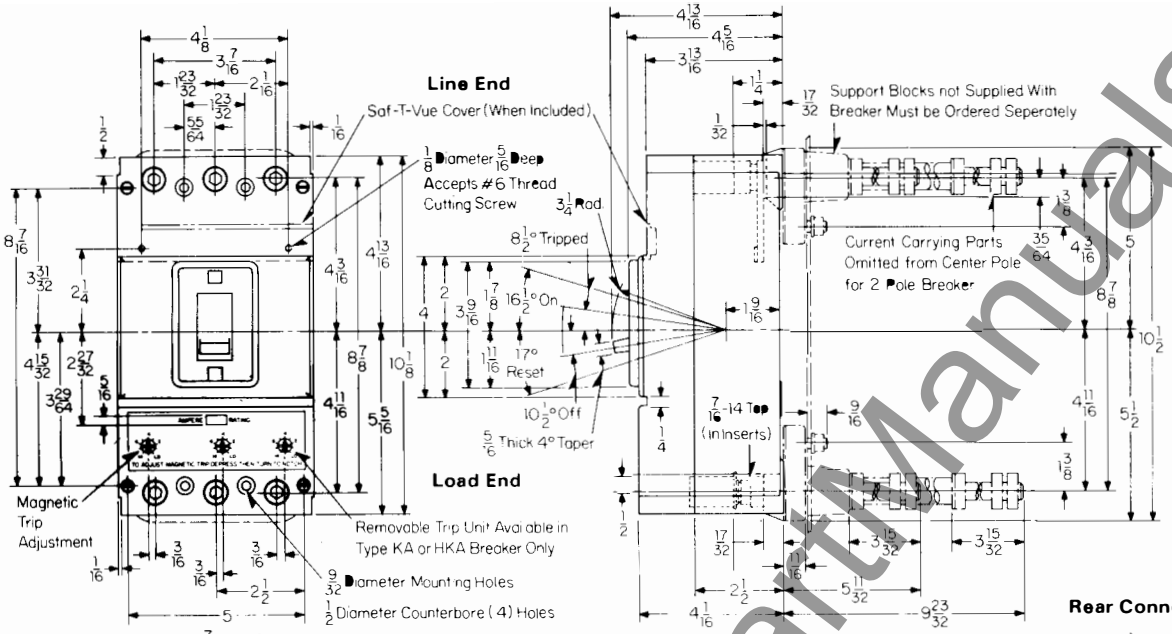

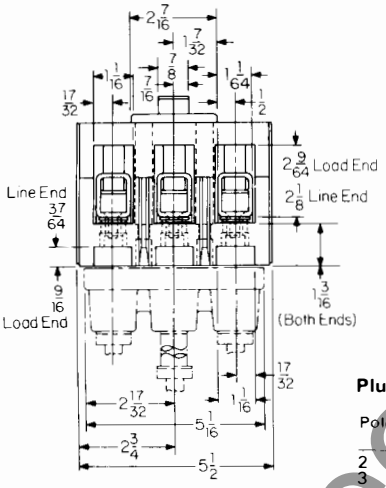

Terminal Arrangements

Copper Cable Only (Supplied As Standard)
Cat. #T225LA-Wire Size #6-350 MCM

Al/Cu Cable (Must Be Specified)
Cat. #TA225LA1-Wire Size #6-350 MCM
Copper or #4-350 MCM Aluminum Cable

Plug-In-Adapter Kit

Poles	Ampere Rating	Kit Style Number	Thread Size
2	70-225	313C644G29	1/2 - 13
3	70-225	313C644G30	1/2 - 13

Rear Connected Studs

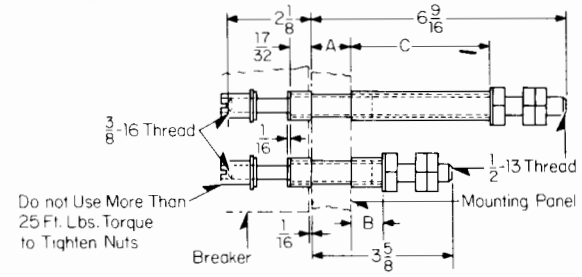

Stud Ampere Rating	Stud Style Number	Panel Thickness A	Tube Length B	Tube Length C	Tube Style Number
225A short	656D565G01	3/4 to 1	2 7/32		456D983H05
225A long	656D565G02	3/4 to 1		3 25/32	456D983H08
225A short	656D565G01	1/2 to 3/4	1 3/32		456D983H06
225A long	656D565G02	1/2 to 3/4		4 1/32	456D983H09
225A short	656D565G01	1/4 to 1/2	1 11/32		456D983H07
225A long	656D565G02	1/4 to 1/2		4 9/32	456D983H10

Stud complete consists of one stud assembly and one tube as per chart.
Order long and short studs as required to obtain proper bus spacing.

Drilling Plans

For Mounting Bolts

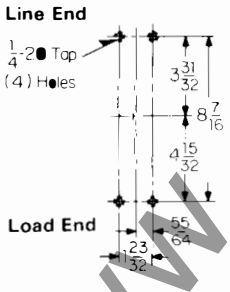

For Rear Connected Studs

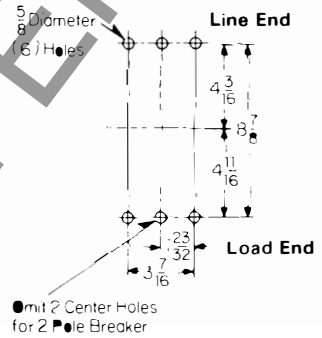

For Plug-In-Block

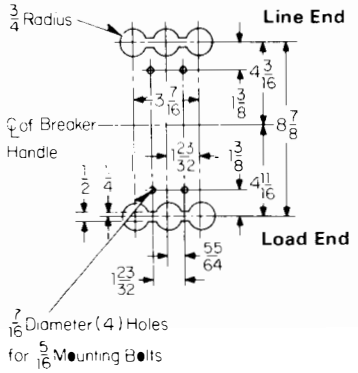

Front Cover Cutout

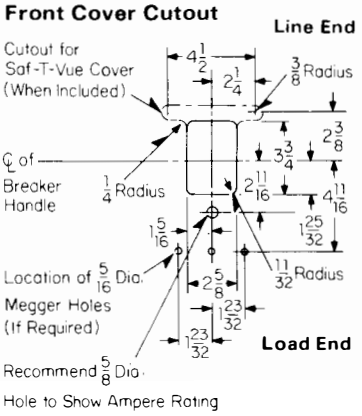

Reproduced From Drawing 456D970

Printed in U.S.A.

www.ElectricalPartManuals.com

August, 1978
Supersedes Dimension Sheet 29-170
dated October, 1977.
Mailed to: E, D, C/1901, 1928, 1929/PL

Page 25: Types JB, KB and MARK 75®
Type HKB 250 Amperes
Page 26: Type DA 400 Amperes

AB DE-ION® Circuit Breakers

Type JB, KB and MARK 75® Type HKB Breakers●

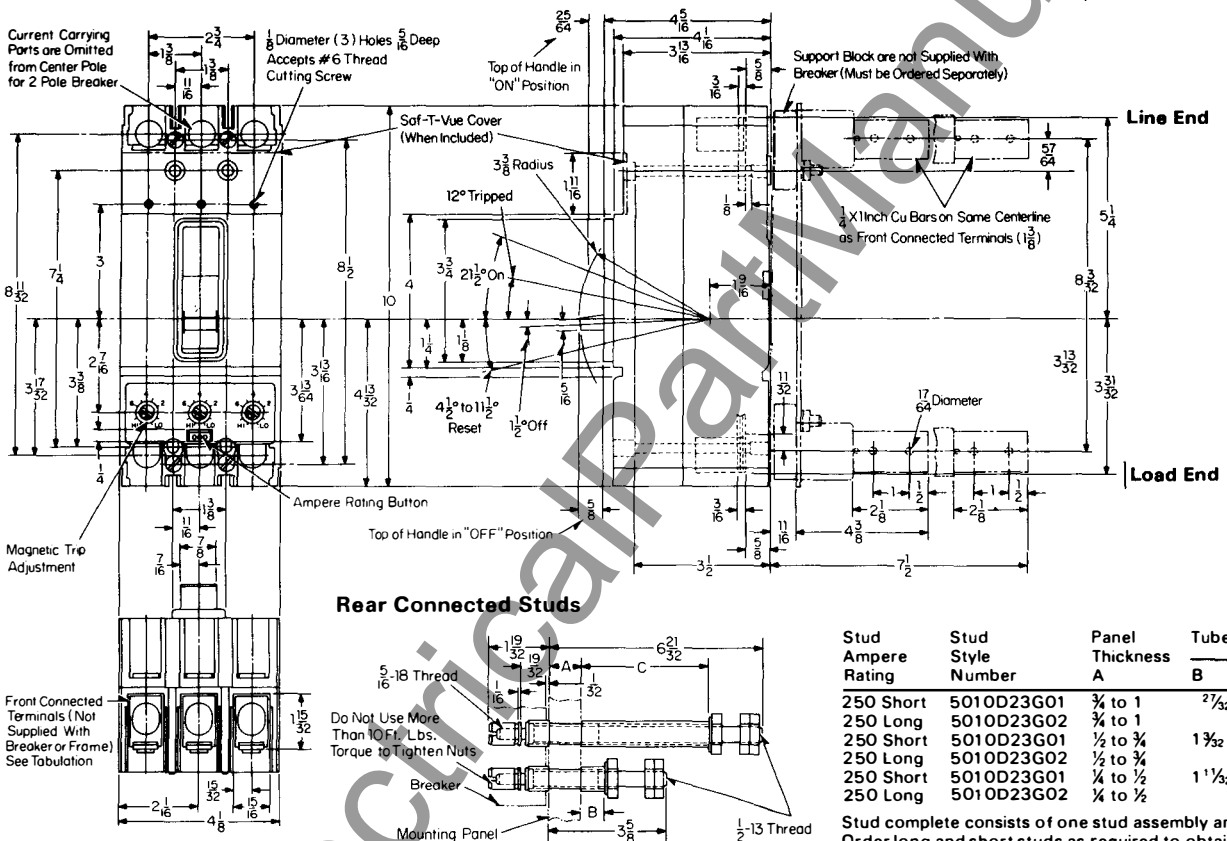

Rear Connected Studs

Stud Ampere Rating	Stud Style Number	Panel Thickness A	Tube Length B	Tube Length C	Tube Style Number
250 Short	5010D23G01	3/4 to 1	27/32		456D983H05
250 Long	5010D23G02	3/4 to 1		3 7/8	5010D23H05
250 Short	5010D23G01	1/2 to 3/4	1 3/32		456D983H06
250 Long	5010D23G02	1/2 to 3/4		4 1/8	5010D23H06
250 Short	5010D23G01	1/4 to 1/2	1 11/32		456D983H07
250 Long	5010D23G02	1/4 to 1/2		4 3/8	5010D23H07

Stud complete consists of one stud assembly and one tube as per chart. Order long and short studs as required to obtain proper bus spacing.

Terminal Arrangements

Cable	Catalog Number	Amp Rating	Wire Size
Cu/Al Single	T250KB	70 to 250	#4 to 350MCM/Cu #2 to 350MCM/Al
*Cu/Al Single	TA250KB	70 to 250	#4 to 350MCM

*Aluminum Body

Drilling Plans

For Mounting Bolts
(Front Connected Terminals)

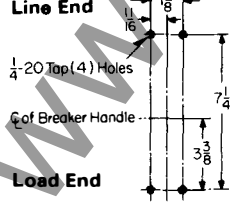

For Rear Connected Studs

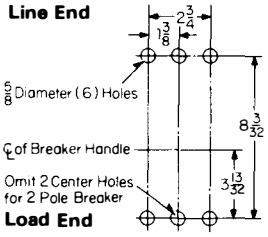

For Plug-in Blocks

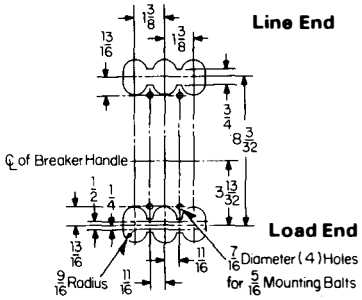

Front Cover Cutout

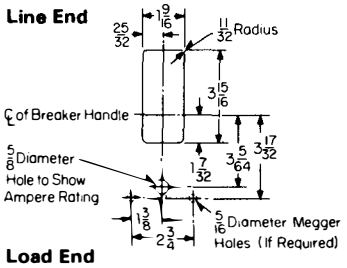

Reproduced from Drawing 4974D50

● Changed since previous issue.

www.ElectricalPartManuals.com

Type DA Breaker

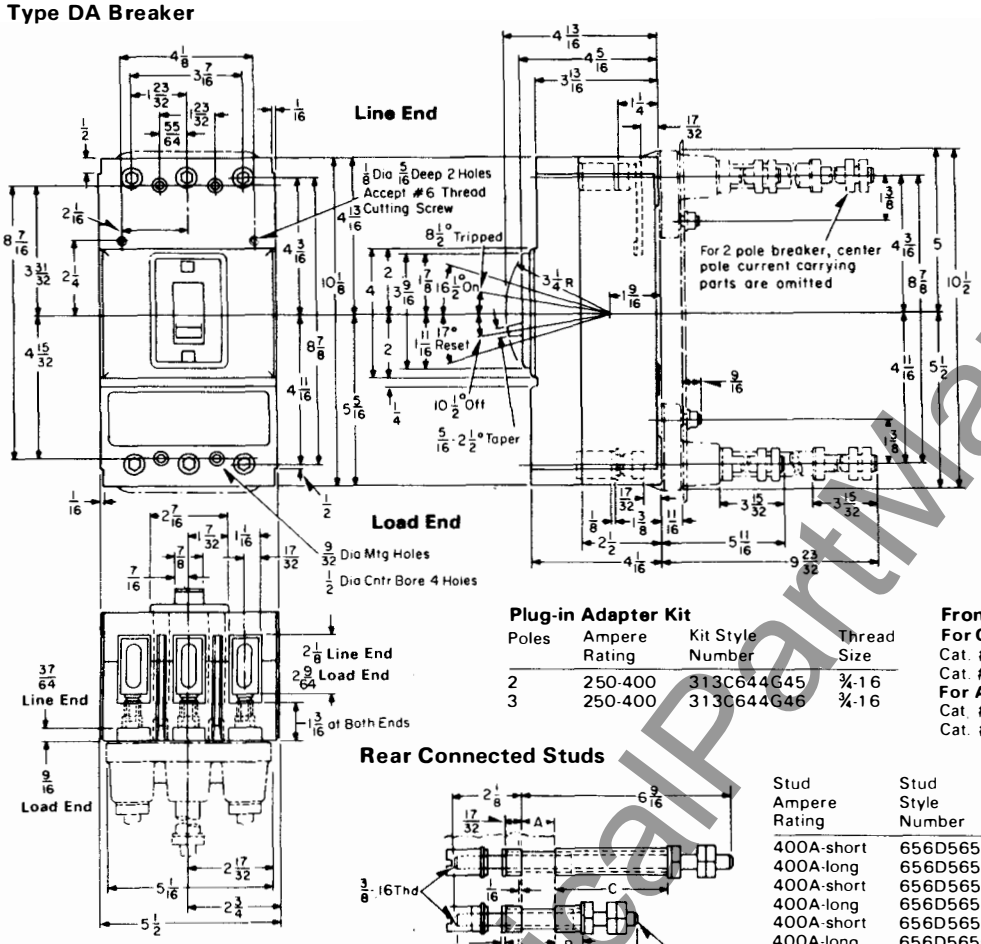

Plug-in Adapter Kit

Poles	Ampere Rating	Kit Style Number	Thread Size
2	250-400	313C644G45	¾-16
3	250-400	313C644G46	¾-16

Front Connected Terminals

For Copper Cable (Supplied as Standard)
Cat. #T350DA Wire Size 250-500 MCM (Single Cable)
Cat. #T400DA2 Wire Size 3/0-250 MCM (Double Cable)
For AL/CU Cable (Must be Specified)
Cat. #TA350DA Wire Size 250-500 MCM (Single Cable)
Cat. #TA400DA1 Wire Size 3/0-250 MCM (Double Cable)

Rear Connected Studs

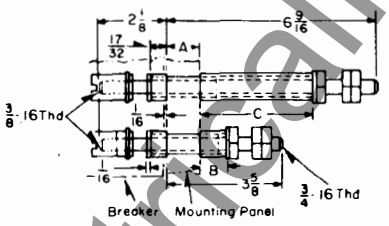

Stud Ampere Rating	Stud Style Number	Panel Thickness A	Tube length B	Tube length C	Tube Style Number
400A-short	656D565G03	¾ to 1	27/32		313C909H17
400A-long	656D565G04	¾ to 1		3 25/32	313C909H20
400A-short	656D565G03	½ to ¾	1 3/32		313C909H18
400A-long	656D565G04	½ to ¾		4 1/32	313C909H21
400A-short	656D565G03	¼ to ½	1 11/32		313C909H19
400A-long	656D565G04	¼ to ½		4 9/32	313C909H22

Stud complete consists of one stud assembly and one tube as per chart

Drilling Plans

For Mounting Bolts

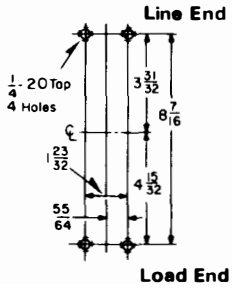

For Rear Connected Studs

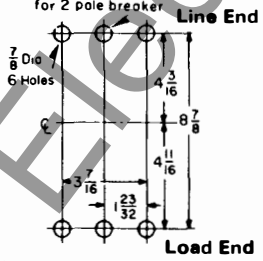

For Plug-in Block

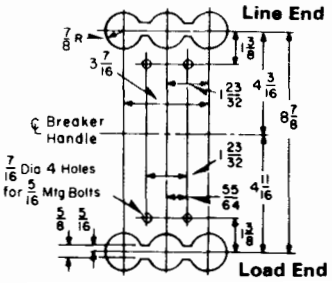

Front Cover Cutout

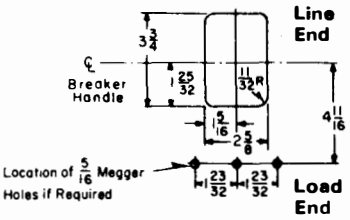

Reproduced From Drawing 374D640

Westinghouse Electric Corporation
Low Voltage Breaker Division
Beaver, Pennsylvania 15009

Printed in U.S.A.

www.ElectricalPartManuals.com

October, 1977
Supersedes Dimension Sheet 29-170
all previous issues.
Mailed to: E, D, C/1901, 1928, 1929/PL

Page 27: Types LAB, LA and MARK 75®
Type HLA 400 Amperes
Page 28: Types LB, LBB and MARK 75®
Type HLB 400 Amperes

AB DE-ION® Circuit Breakers

Type LAB, LA and MARK 75® Type HLA Breakers 400 Amperes

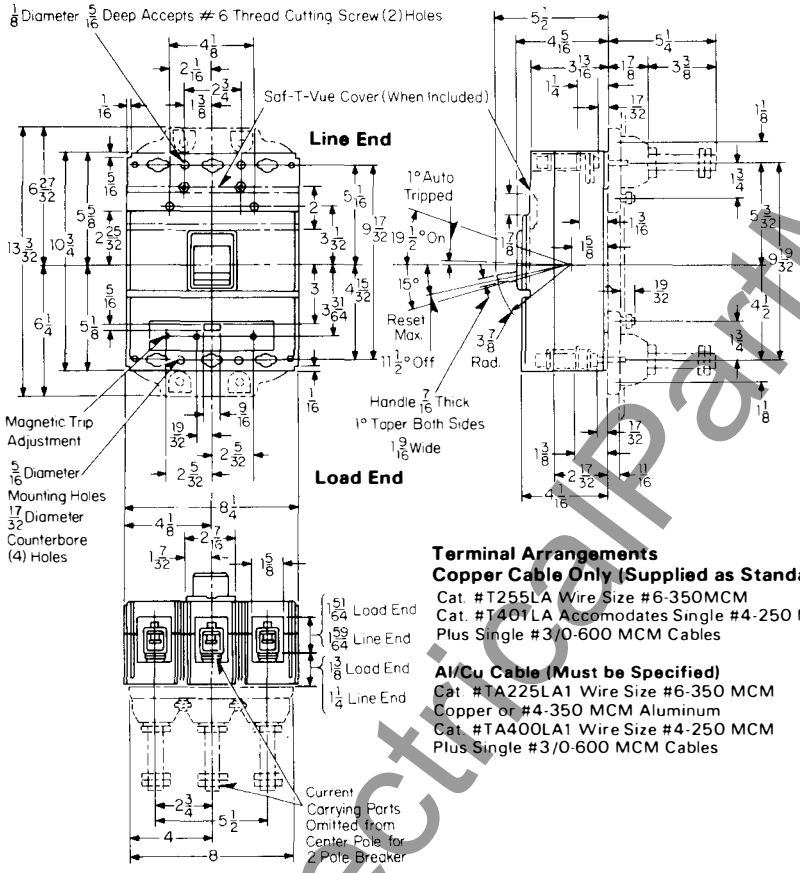

Terminal Arrangements
Copper Cable Only (Supplied as Standard)
Cat. #T255LA Wire Size #6-350MCM
Cat. #T401LA Accomodates Single #4-250 MCM
Plus Single #3/0-600 MCM Cables

Al/Cu Cable (Must be Specified)
Cat. #TA225LA1 Wire Size #6-350 MCM
Copper or #4-350 MCM Aluminum
Cat. #TA400LA1 Wire Size #4-250 MCM
Plus Single #3/0-600 MCM Cables

Rear Connected Studs
(For Non-Conductive Panels)

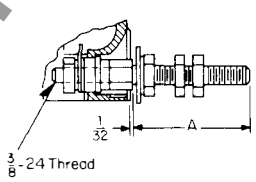

Ampere Rating	Style Number	Dimension A	Thread Size
225	1241345	3 7/32	1/2-13
225	1241346	6 9/32	1/2-13
225	1241392	4 31/32	1/2-13
400	05B7383G15	5 19/32	3/4-16
400	0587383G16	7 31/32	3/4-16
400	05B7383G17	10 15/32	3/4-16

Plug-In Adapter Kit

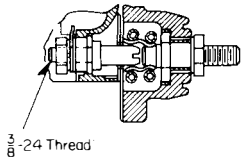

Poles	Ampere Rating	Style Number	Thread Size
2	70 to 400	313C644G25	3/4-16
3	70 to 400	313C644G26	3/4-16

Drilling Plans
For Mounting Bolts

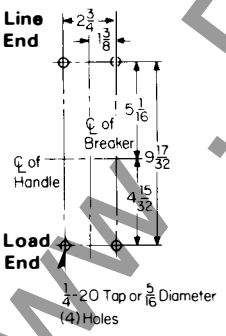

For Rear Connected Studs
(Non-Conductive Panels)

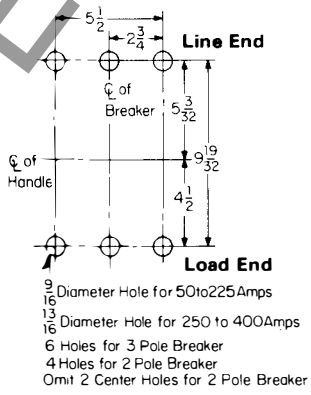

For Plug-In Block

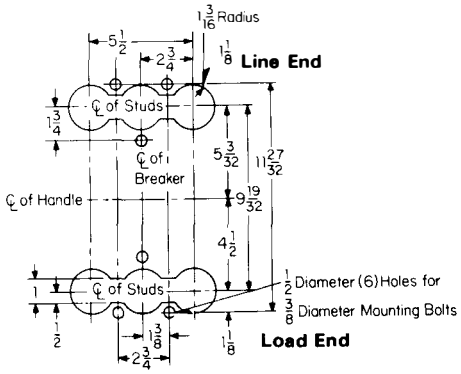

Front Cover Cutout

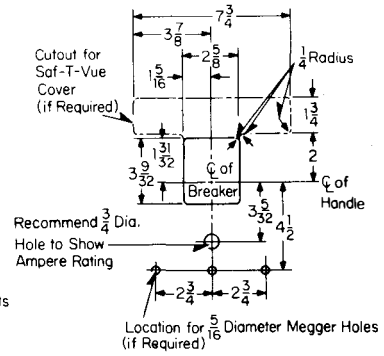

Reproduced from Drawing 455D789

www.ElectricalPartManuals.com

Type LB, LBB and MARK 75® Type HLB Breakers

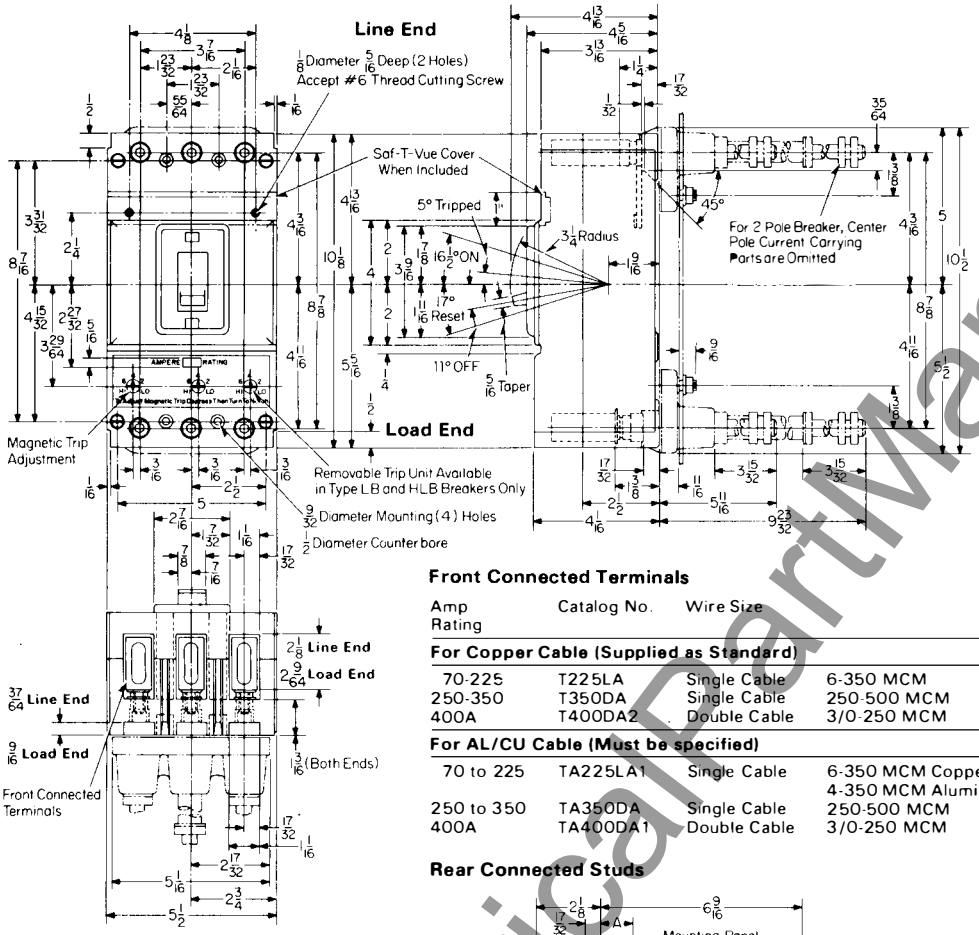

Drilling Plans For Mounting Bolts

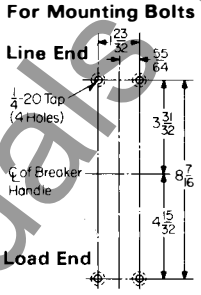

For Rear Connected Studs

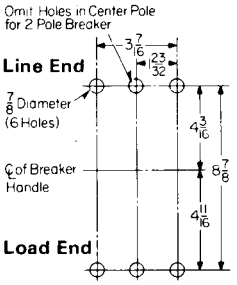

For Plug-in Block

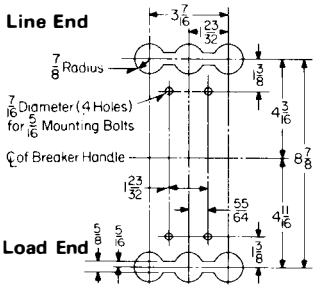

Front Connected Terminals

Amp Rating	Catalog No.	Wire Size	
For Copper Cable (Supplied as Standard)			
70-225	T225LA	Single Cable	6-350 MCM
250-350	T350DA	Single Cable	250-500 MCM
400A	T400DA2	Double Cable	3/0-250 MCM
For AL/CU Cable (Must be specified)			
70 to 225	TA225LA1	Single Cable	6-350 MCM Copper or 4-350 MCM Aluminum
250 to 350	TA350DA	Single Cable	250-500 MCM
400A	TA400DA1	Double Cable	3/0-250 MCM

Rear Connected Studs

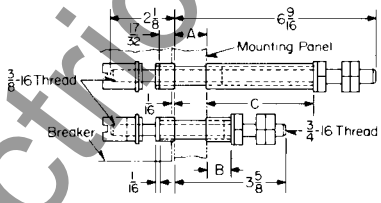

Stud Ampere Rating	Stud Style Number	Panel Thickness A	Tube length B	Tube length C	Tube Style Number
400A-short	656D565G03	3/4 to 1	2 7/32		313C909H17
400A-long	656D565G04	3/4 to 1		3 25/32	313C909H20
400A-short	656D565G03	1/2 to 3/4	1 3/32		313C909H18
400A-long	656D565G04	1/2 to 3/4		4 1/32	313C909H21
400A-short	656D565G03	1/4 to 1/2	1 1 1/32		313C909H19
400A-long	656D565G04	1/4 to 1/2		4 9/32	313C909H22

Stud complete consists of one stud assembly and one tube as per chart.

Plug-In Adapter Kit

Poles	Ampere Rating	Kit Style Number	Thread Size
2	250-400	313C644G45	3/4-16
3	250-400	313C644G46	3/4-16

Front Cover Cutout

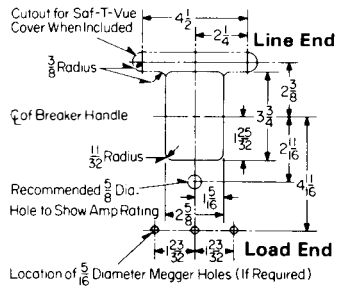

Reproduced From Drawing 5680D06

Westinghouse Electric Corporation
Low Voltage Breaker Division
Beaver, Pennsylvania 15009

Printed in U.S.A.

www.ElectricalPartManuals.com

October, 1977
Supersedes Dimension Sheet 29-170
all previous issues.
Mailed to: E, D, C/1901, 1928, 1929/PL

Type LC and MARK 75® Type HLC
SELTRONIC™ Circuit Breakers

Page 31: Types LC-150, LC-300, MARK 75®
Types HLC-150, HLC-300
Page 32: Types LC-600, MARK 75® HLC-600

AB DE-ION® Circuit Breakers

Type LC-150, LC-300, MARK 75® Type HLC-150, HLC-300 Breakers

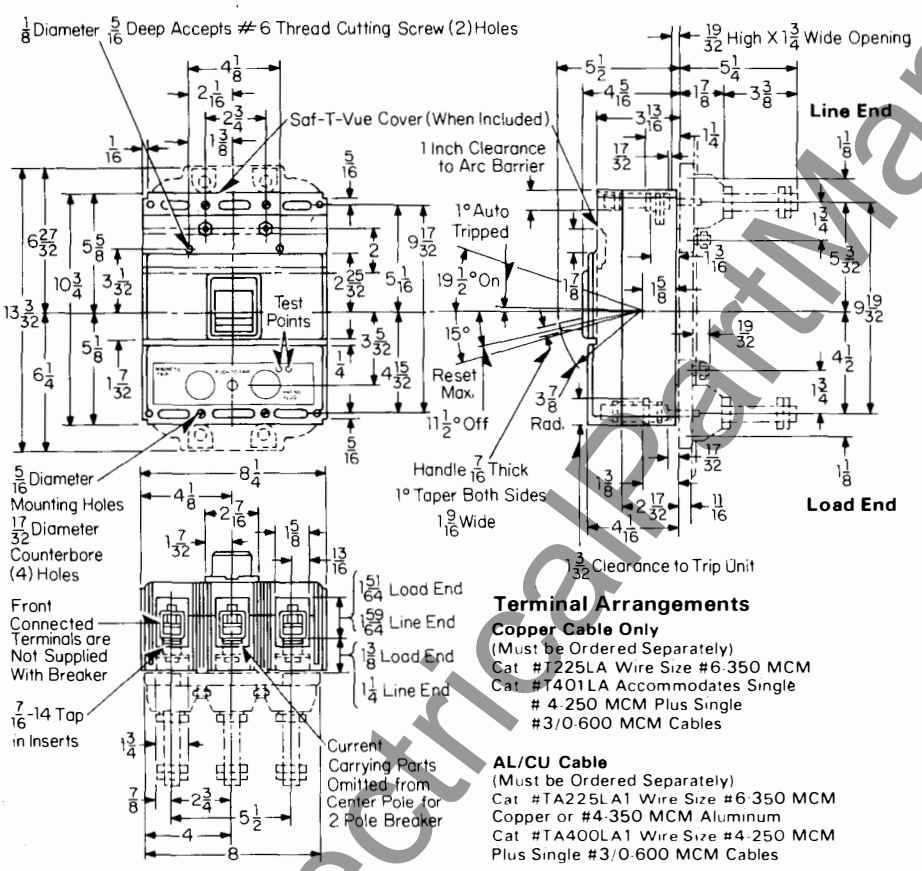

Terminal Arrangements

Copper Cable Only
(Must be Ordered Separately)
Cat #T225LA Wire Size #6-350 MCM
Cat #T401LA Accommodates Single
4-250 MCM Plus Single
#3/0-600 MCM Cables

AL/CU Cable
(Must be Ordered Separately)
Cat #TA225LA1 Wire Size #6-350 MCM
Copper or #4-350 MCM Aluminum
Cat #TA400LA1 Wire Size #4-250 MCM
Plus Single #3/0-600 MCM Cables

Rear Connected Studs
(For Non-Conductive Panels)

Do Not Use More Than 25 Ft. Lbs. Torque to Tighten Nuts

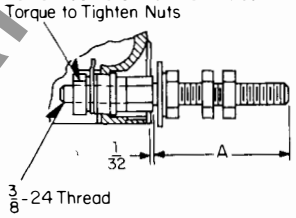

Maximum Ampere Rating	Style Number	Dimension A	Thread Size
225	1241345	3 7/32	1/2 - 13
225	1241346	6 9/32	1/2 - 13
225	1241392	4 31/32	1/2 - 13
300	0587383G15	5 15/32	3/4 - 16
300	05B7383G16	7 31/32	3/4 - 16
300	0587383G17	10 15/32	3/4 - 16

Plug-In Adapter Kit

Do Not Use More Than 25 Ft. Lbs. Torque to Tighten Nuts

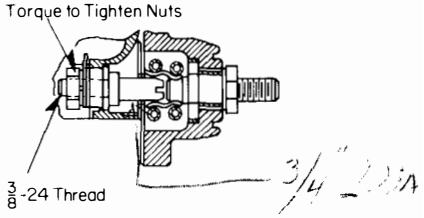

Poles	Ampere Rating	Style Number	Thread Size
2	75 to 300	313C644G25	3/4 - 16
3	75 to 300	313C644G26	3/4 - 16

Drilling Plans
For Mounting Bolts

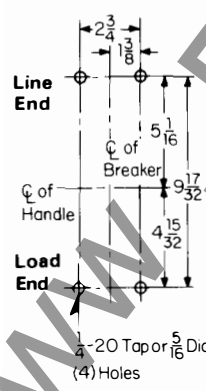

For Rear Connected Studs
(Non-Conductive Panels)

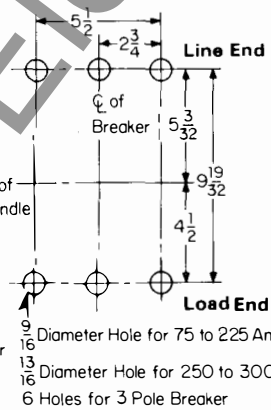

For Plug-in Block

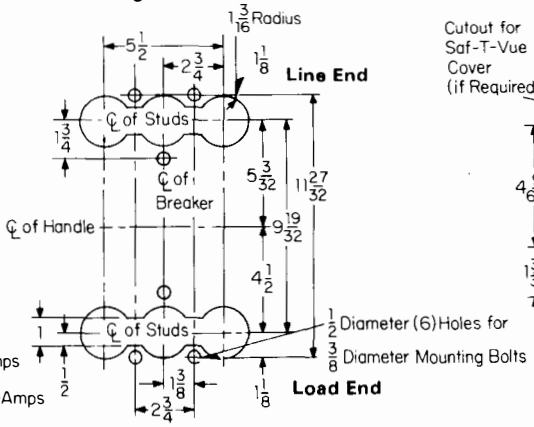

Front Cover Cutout

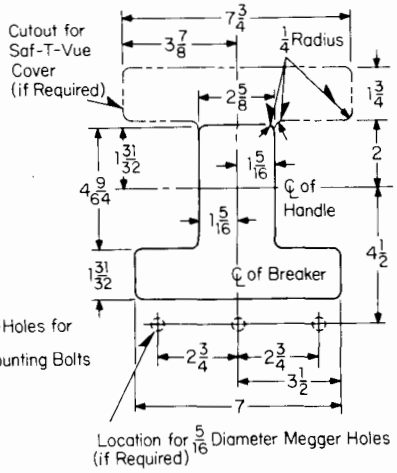

Reproduced From Drawing 2608D93

www.ElectricalPartManuals.com

Type LC-600, MARK 75® Type HLC-600 Breakers

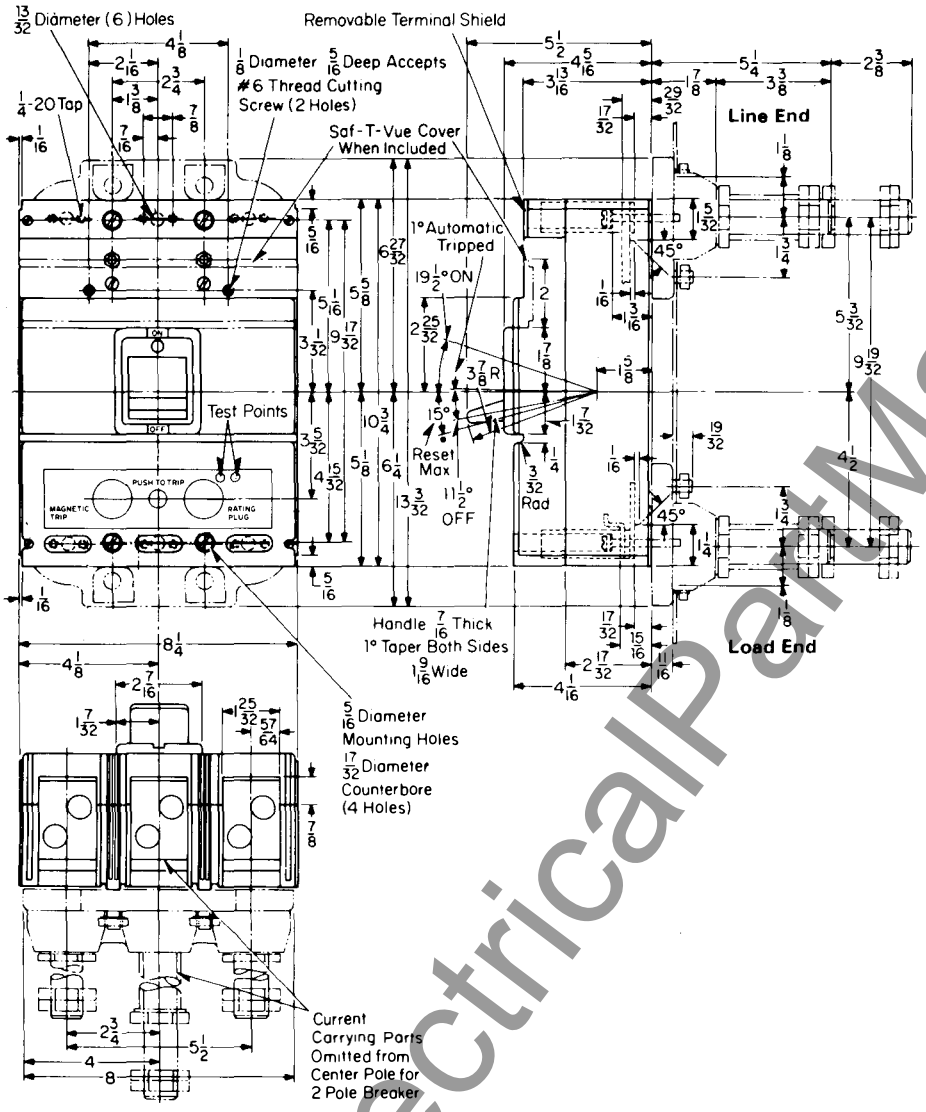

Rear Connected Studs

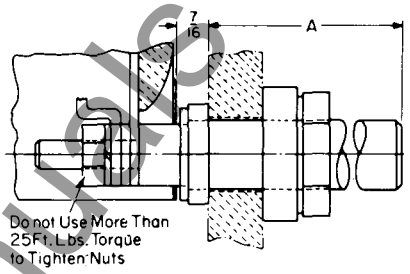

Ampere Rating	Style Number	Thread Size	Dimension A
300 to 600	314C960G07	1 - 12	5 15/32
300 to 600	314C960G08	1 - 12	7 31/32
300 to 600	314C960G09	1 - 12	10 15/32

Plug-In-Adapter Kit

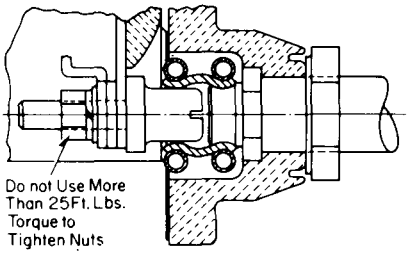

Poles	Ampere Rating	Style Number	Thread Size
2	300 to 600	313C644G50	1 - 12
3	300 to 600	313C644G51	1 - 12

Terminal Arrangements

Copper Cable Only
(Must be Ordered Separately)
Cat. #T600LA Wire Size (2) 250-500 MCM

Optional AL/CU Cable
(Must be Ordered Separately)
Cat. #TA600LA Wire Size (2) 250-500 MCM

Drilling Plans

For Mounting Bolts
(Front Connected Terminals)

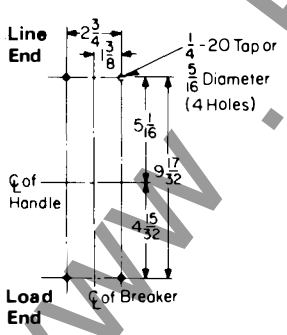

For Rear Connected Studs
(Insulated Panel)

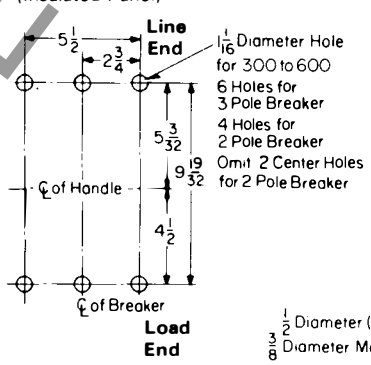

For Plug-in Block

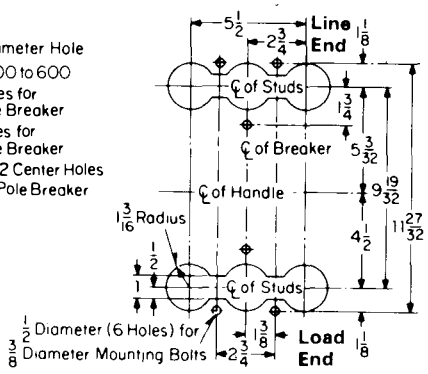

Front Cover Cutout

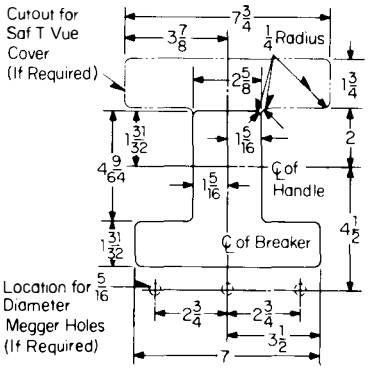

Reproduced From Drawing 2608D92

Printed in U.S.A.

www.ElectricalPartManuals.com

Westinghouse Electric Corporation
Low Voltage Breaker Division
Beaver, Pennsylvania 15009

RECEIVED
SEP 28 1981
S.W.B.D. CO.

August, 1981
Supersedes Dimension Sheet 29-170, pages 31-32, dated July, 1981.
Mailed to: E, D, C/1901, 1928, 1929/PL

Page 31: Types LA and MARK 75® Type HLA 600 Amperes
Page 32: Types MA and MARK 75® Type HMA 800 Amperes

AB DE-ION® Circuit Breakers

Type LA and MARK 75® Type HLA Breakers

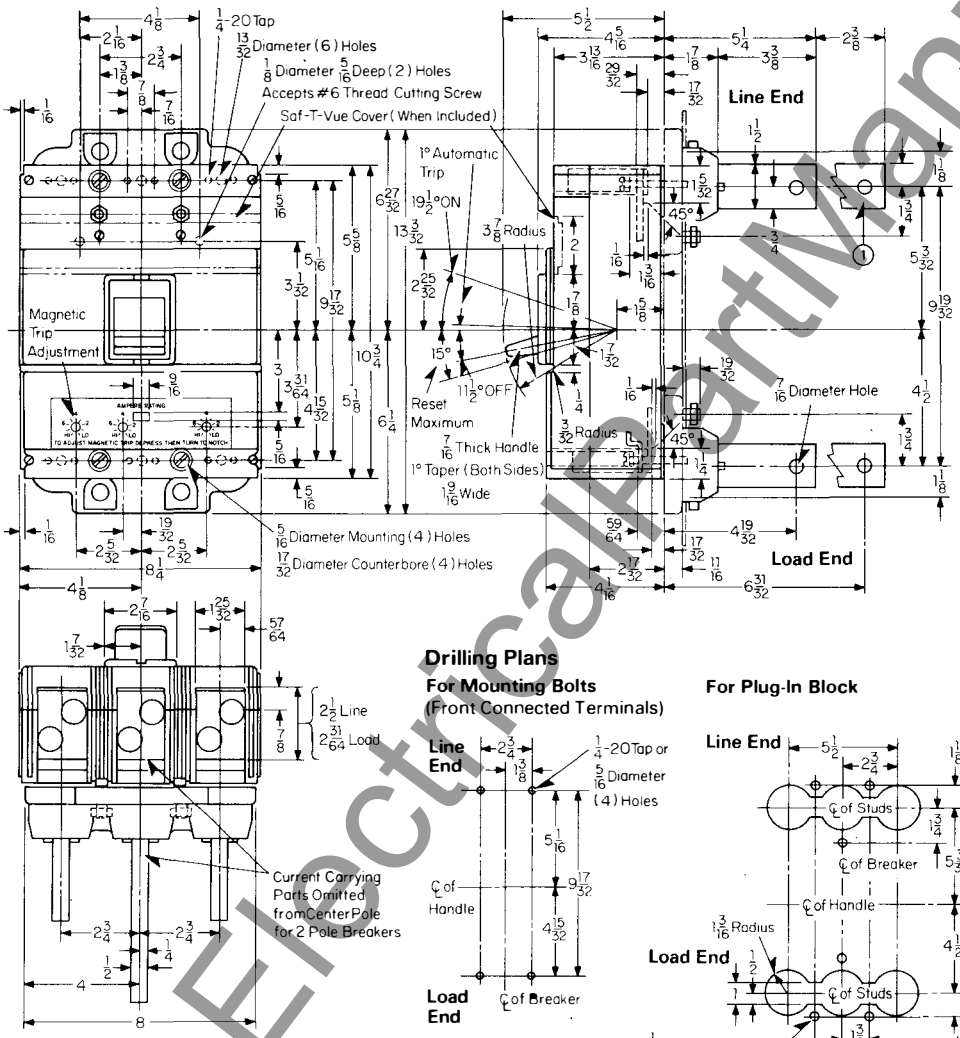

Plug-In Adapter Kit
(1 Kit per Breaker, Not Supplied With Breaker)

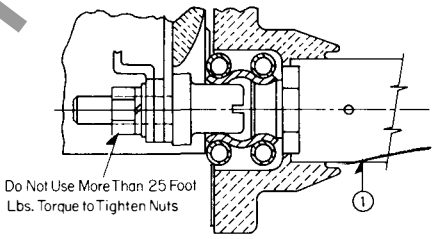

1 Type LA Breaker, 600 Amperes

Poles	Ampere Rating	Style Number
2	250-600	506C144G21
3	250-600	506C144G22

Terminal Arrangements

Copper Cable Only (Supplied as Standard)
Cat. #T600LA Wire Size (2) 250-500 MCM

AL/CU Cable (Must be Specified)
Cat. #TA600LA Wire Size (2) 250-500 MCM

Drilling Plans

For Mounting Bolts
(Front Connected Terminals)

For Plug-In Block

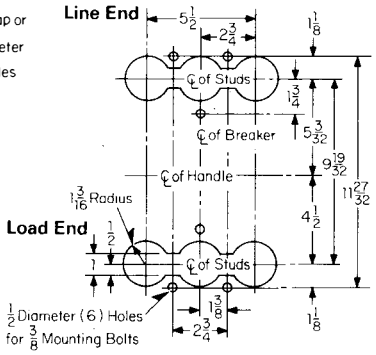

Front Cover Cutout

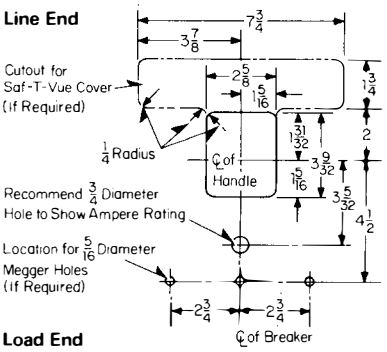

Rear Connected Studs

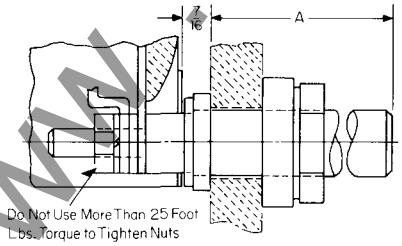

Ampere Rating	Style Number	Thread Size	Dimension A
250 to 600	314C960G07	1-12	5 15/32
250 to 600	314C960G08	1-12	7 31/32
250 to 600	314C960G09	1-12	10 15/32

Reproduced From Drawing 1374D20

www.ElectricalPartManuals.com

Type MA and MARK 75® Type HMA Breakers

Terminal Arrangements

For Use With Copper Cable Only (Supplied As Standard)

Cable	Catalog No.	Ampere Rating	Wire Size
Single	T350MA	125-350	#1-600 MCM
Double	T600MA1	400-600	2/0-500 MCM
Triple	T800MA1	700-800	3/0-300 MCM

For Use With Al/Cu Cable (Must Be Specified)

Double	TA700MA1	125-600	#1-500 MCM
Triple	TA800MA2	700-800	3/0-400 MCM

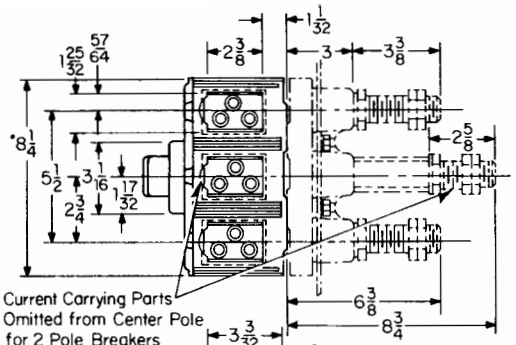

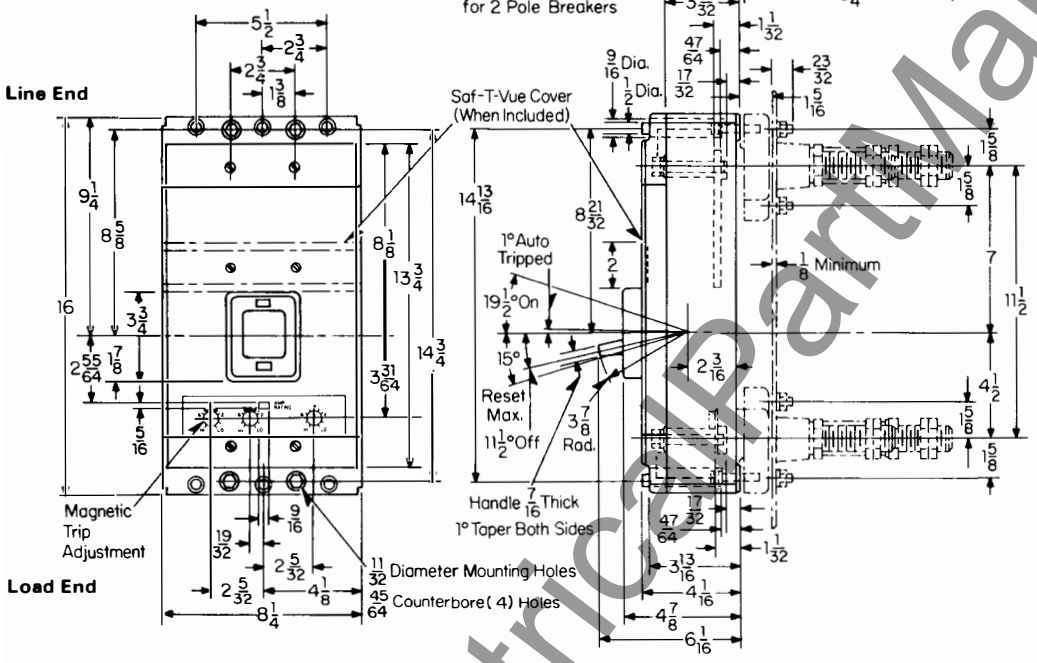

Rear Connected Studs

Stud Ampere Rating	Stud Style Number	Thread Size	Dimension A
125-225	314C960G01	½-13	3 21/32
250-400	314C960G04	¾-16	5 29/32
250-400	314C960G05	¾-16	8 13/32
250-400	314C960G06	¾-16	10 29/32
450-600	314C960G07	1-12	5 29/32
450-600	314C960G08	1-12	8 13/32
450-600	314C960G09	1-12	10 29/32
700-800	314C960G10	1⅛-12	5 29/32
700-800	314C960G11	1⅛-12	8 13/32
700-800	314C960G12	1⅛-12	10 29/32

Rear Connected Studs — 2 Required Per Pole (Not Supplied With Breaker)

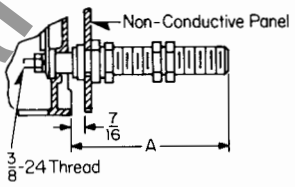

Plug-In Adapter Kit

Poles	Ampere Rating	Kit Style Number	Thread Size	Fig
2	125-600	313C644G27	1⅛-12	1
3	125-600	313C644G28	1⅛-12	1
2	700-800	176C544G01	1⅛-12	2
3	700-800	176C544G02	1⅛-12	2

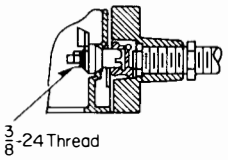

Figure 1 (Plug-In Type)

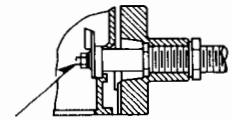

Do not Use More Than 25 Ft. Lbs. Torque to Tighten Nuts

Figure 2 (Front Removable Bolted Type)

Drilling Plans

For Plug-In Block

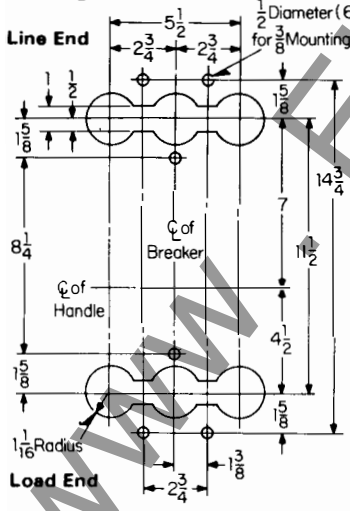

Rear Connected Studs (For Non-Conductive Panels)

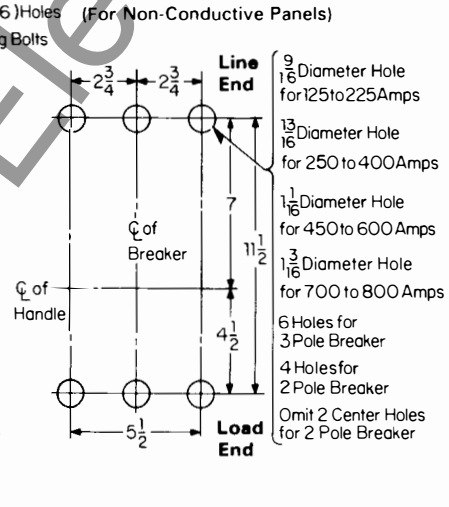

For Mounting Bolts

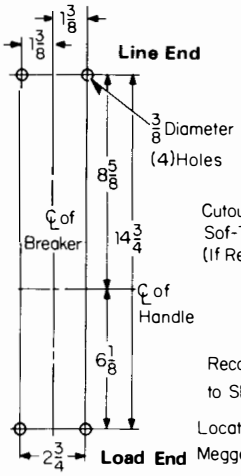

Front Cover Cutout

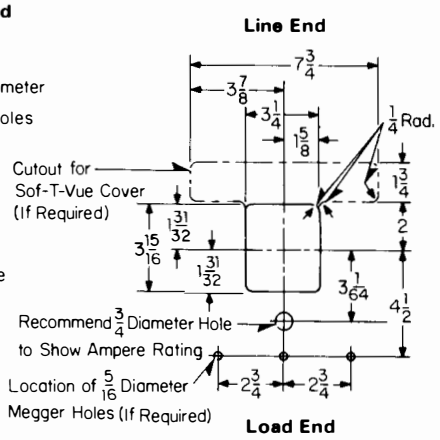

Reproduced From Drawing 457D265

www.ElectricalPartManuals.com

Printed in U.S.A.

November, 1981
Supersedes Dimension Sheet 29-170, pages 33-34, dated October, 1977
Mailed to: E, D, C/1901, 1928, 1929/PL

Page 33: Types MC, MCG, MARK 75® Types HMC, HMCG 800 Ampere SELTRONIC™ Circuit Breakers

Page 34: Types NC, NCG, MARK 75® Types HNC, HNCG 1200 Ampere SELTRONIC™ Breakers

AB DE-ION® Circuit Breakers

Type MC, MCG, MARK 75® Type HMC, HMCG Breakers

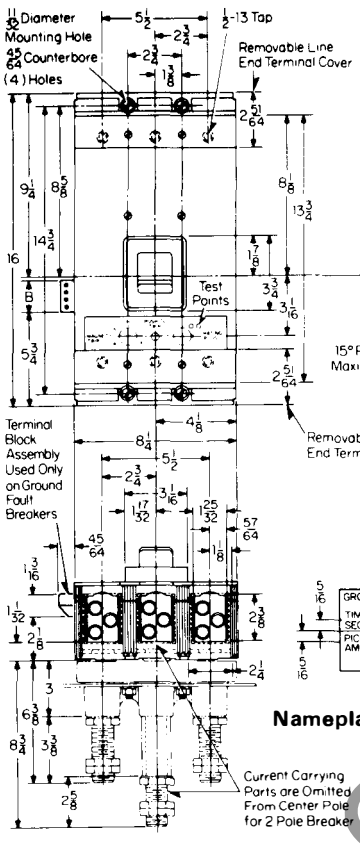

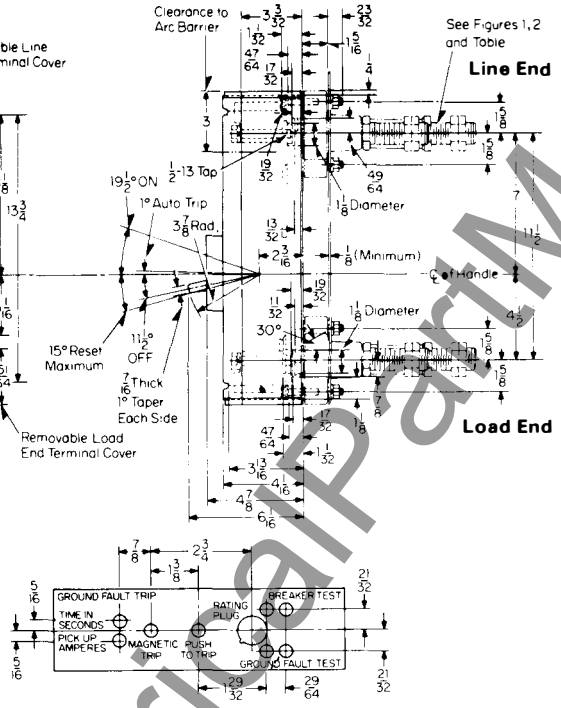

Nameplate (Used with Ground Fault Trip)

	B
2 Terminal Unit	13/16
4 Terminal Unit	1 9/16

Front Connected Terminals
(Must be Ordered Separately)

Amp Rating	Catalog No.	Wire Size Number of Cables
For Copper Cable		
600	T600MA1	(2) 2/0-500MCM
800	T800MA1	(3) 3/0-300MCM
For AL/CU Cable		
600	TA700MA1	(2) #1-500MCM
800	TA800MA2	(3) 3/0-400MCM

Rear Connected Studs
2 Required Per Pole (Not Supplied With Breaker)

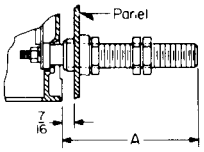

Stud Ampere Rating	Stud Style Number	Thread Size	Dimension A
250-400	314C960G04	3/4-16	5 29/32
250-400	314C960G05	3/4-16	8 13/32
250-400	314C960G06	3/4-16	10 29/32
450-600	314C960G07	1-12	5 29/32
450-600	314C960G08	1-12	8 13/32
450-600	314C960G09	1-12	10 29/32
700-800	314C960G10	1 1/8-12	5 29/32
700-800	314C960G11	1 1/8-12	8 13/32
700-800	314C960G12	1 1/8-12	10 29/32

Plug-In Adapter Kit
1 Kit Per Breaker (Not Supplied With Breaker)

Poles	Ampere Rating	Kit Style Number	Thread Size	Fig
2	125-600	313C644G27	1 1/8-12	1
3	125-600	313C644G28	1 1/8-12	1
2	700-800	176C544G01	1 1/8-12	2
3	700-800	176C544G02	1 1/8-12	2

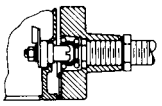

Figure 1

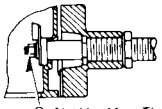

Figure 2

Do Not Use More Than 25Ft. Lbs. Torque to Tighten Nuts

Drilling Plans
For Mounting Bolts
(Front Connected Terminals)

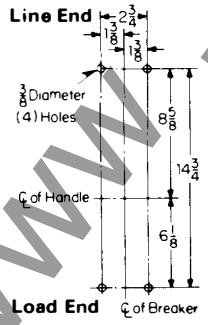

For Rear Connected Studs

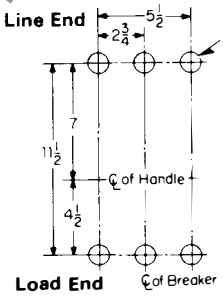

13/16 Diameter Hole for 250 Amps to 400 Amps
1 1/16 Diameter Hole for 450 Amps to 600 Amps
1 3/16 Diameter Hole for 700 Amps to 800 Amps

6 Holes for 3 Pole Breaker
4 Holes for 2 Pole Breaker

Omit 2 Center Holes for 2 Pole Breaker

For Plug-In Adapter Kit

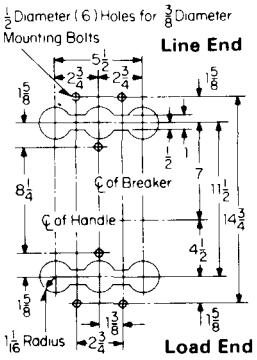

Front Cover Cutout

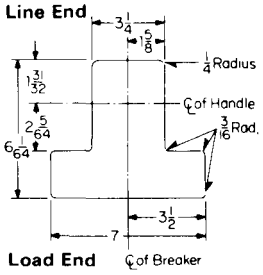

Reproduced from Drawing 2605D21

www.ElectricalPartManuals.com

Type NC, NCG, MARK 75® Type HNC, HNCG Breakers©

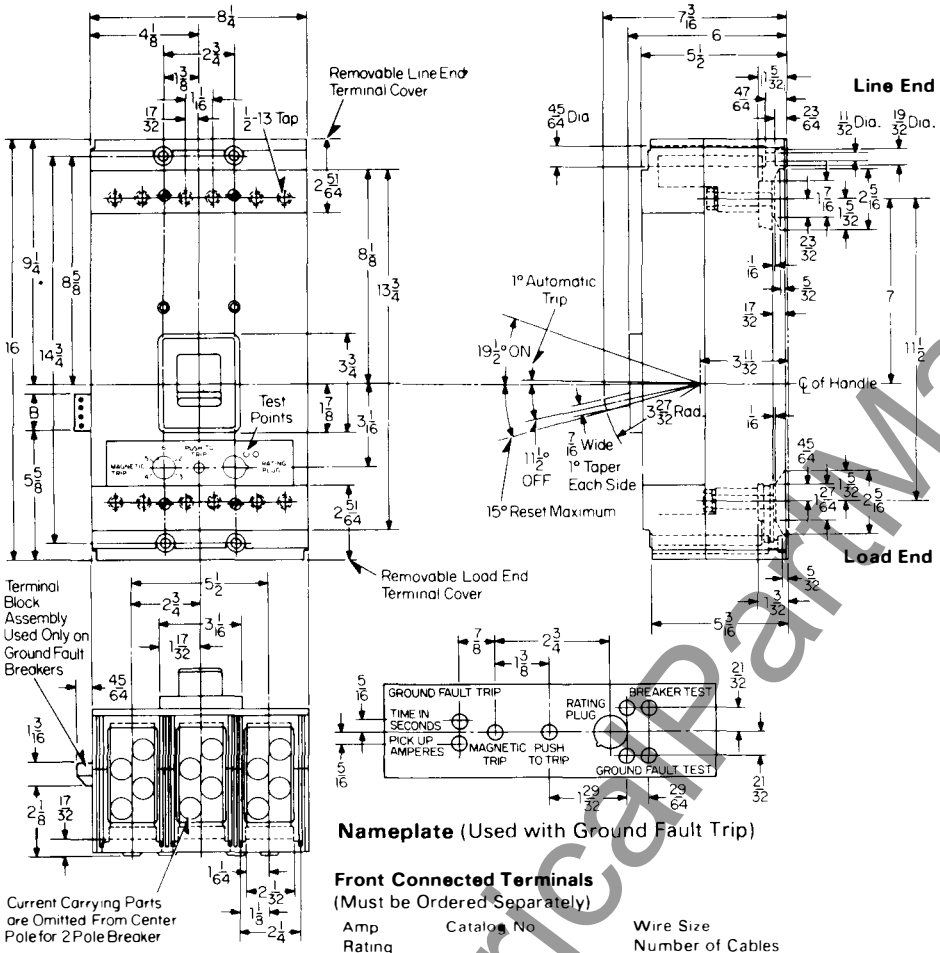

	8
2 Terminal Unit	13/16
4 Terminal Unit	1 9/16

Nameplate (Used with Ground Fault Trip)

Bolted Rear Connected Studs For 700-800 Amps

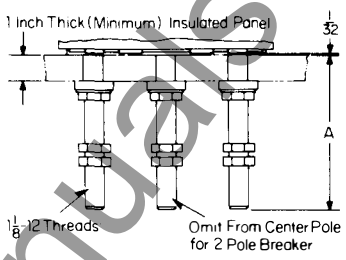

Style No.	A
623B222G01	5 1/2
623B222G02	8
623B222G03	10 1/2

For 900-1200 Amps Only

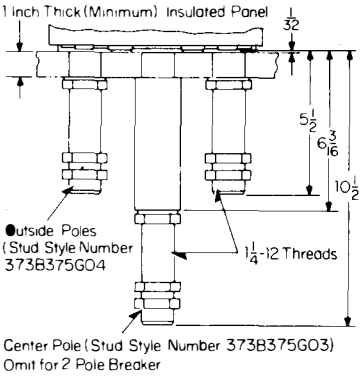

Front Connected Terminals
(Must be Ordered Separately)

Amp Rating	Catalog No	Wire Size Number of Cables
For Copper Cable		
600	T700NB1	(2) 2/0-500MCM
1000	T1000NB1	(3) 3/0-500MCM
1200	T1200NB1	(4) 3/0-400MCM
For AL/CU Cable		
600	TA700NB1	(2)#1-500MCM
1000	TA1000NB1	(3) 3/0-400MCM
1200	TA1201NB1	(3) 500-750MCM
1200	TA1200NB1	(4) 4/0-500MCM

Drilling Plans
For Mounting Bolts

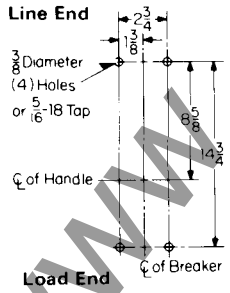

For Rear Connected Studs
(Insulated Panel)

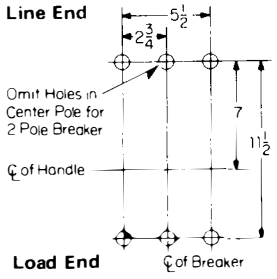

Amp Rating	Hole Dia
700-800	1 3/16
900-1200	1 5/16

Front Cover Cutout

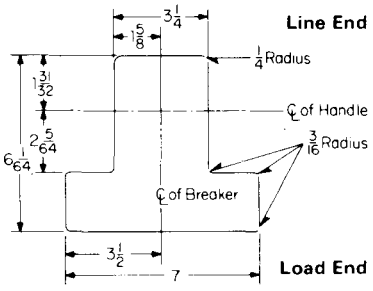

Reproduced from Drawing 2605D23

© Changed since previous issue.

www.ElectricalPartManuals.com

Printed in U.S.A.

November, 1981
Supersedes Dimension Sheet 29-170, pages 35-36, dated October, 1977
Mailed to: E, D, C/1901, 1928, 1929/PL

Type NB and MARK 75® Type HNB

Page 35: Type NB, MARK 75® Type HNB
Page 36: Mounting Block for Type NB, MARK 75 HNB, SELTRONIC™ Types NC, MARK 75 HNC

AB DE-ION® Circuit Breakers

Type NB, MARK 75® Type HNB Breakers©

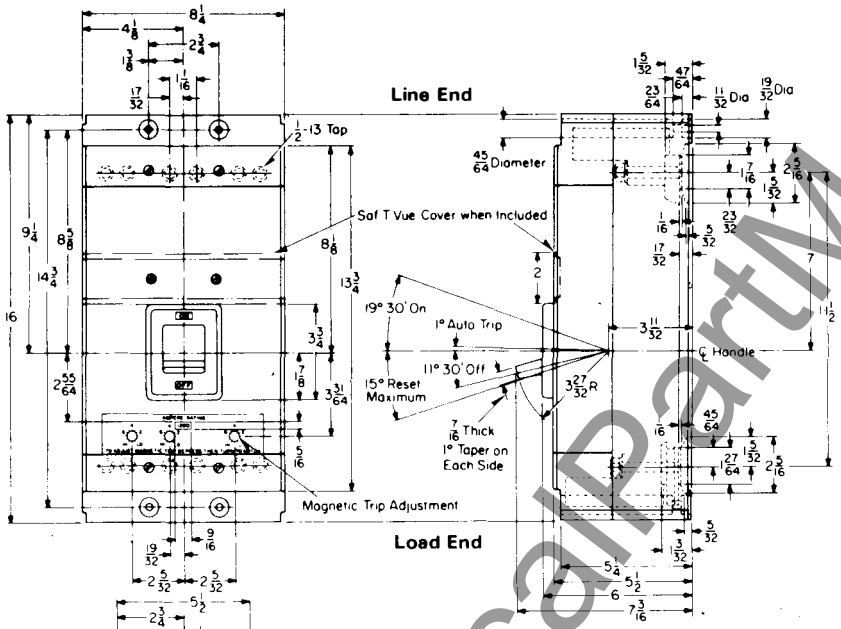

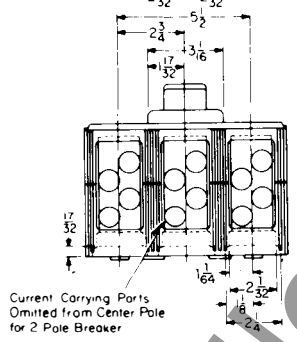

Front Connected Terminals

Ampere Rating	Catalog No.	Wire Size
For Copper Cable Only (Supplied as Standard)		
700-1000	T1000 NB1	Triple Cable 3/0 -- 500 MCM
1200	T1200 NB1	Four Cable 3/0 — 400 MCM
For AL/CU Cable (Must Be Specified)		
700-1000	TA1000 NB1	Triple Cable 3/0 — 400 MCM
1200	TA1200 NB1	Four Cable 4/0 -- 500 MCM
1200	TA1201 NB1	Triple Cable -- 500-750 MCM

Bolted Rear Connected Studs
For 700 to 800 Amps

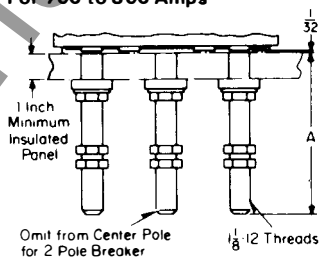

Style No	A
623B222G01	5½
623B222G02	8
623B222G03	10½

For 900 to 1200 Amps Only

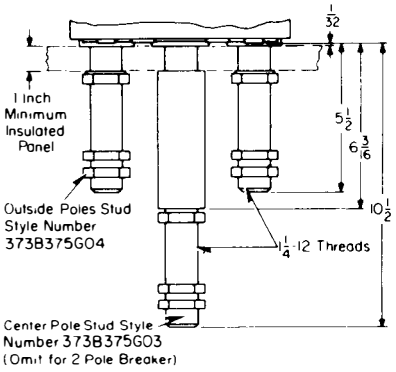

Drilling Plans
For Mounting Bolts
(Front Connected Terminals)

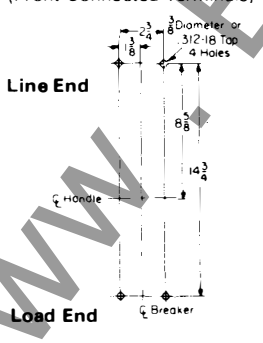

For Rear Connected Studs
(Insulated Panel)

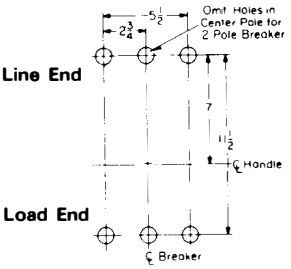

Style No	A
623B222G01	5½
623B222G02	8
623B222G03	10½

Front Cover Cutout

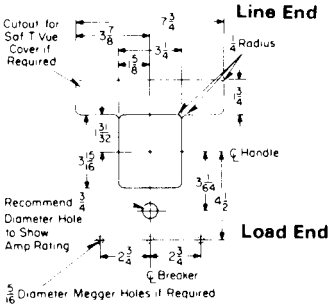

Reproduced From Drawing 371 D578

© Changed since previous issue.

www.ElectricalPartManuals.com

Mounting Block for Type NB, NC, MARK 75® Type HNB, HNC Breakers

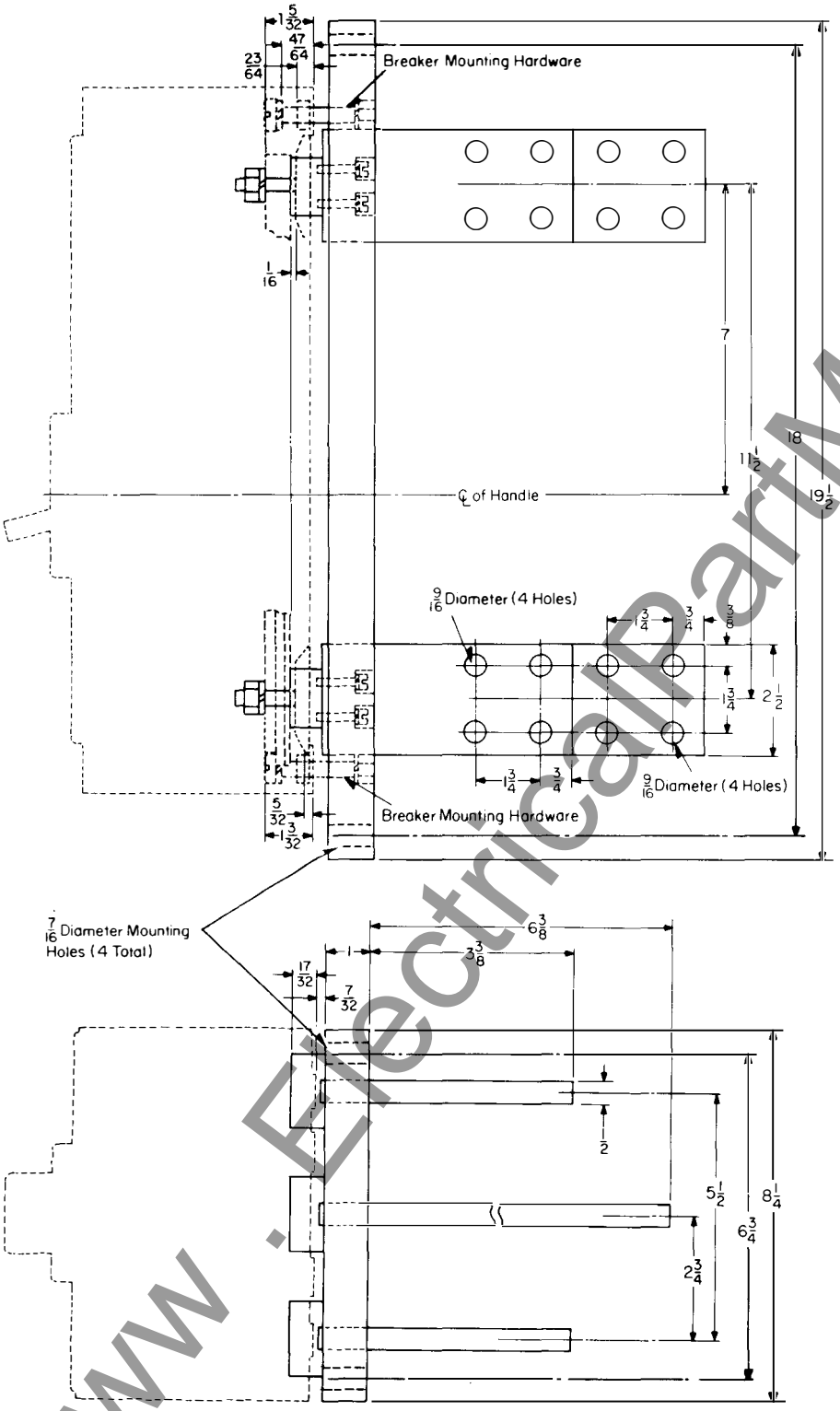

Reproduced From Drawing 4990D37

Printed in USA

www.ElectricalPartManuals.com

October, 1977
Supersedes Dimension Sheet 29-170
all previous issues.
Mailed to: E, D, C/1901, 1928, 1929/PL

Type PB 2000 Ampere Circuit Breakers

Page 37: Type PB Rear Connected
Page 38: Type PBF Front Connected

AB DE-ION® Circuit Breakers

Type PB Rear Connected Breaker

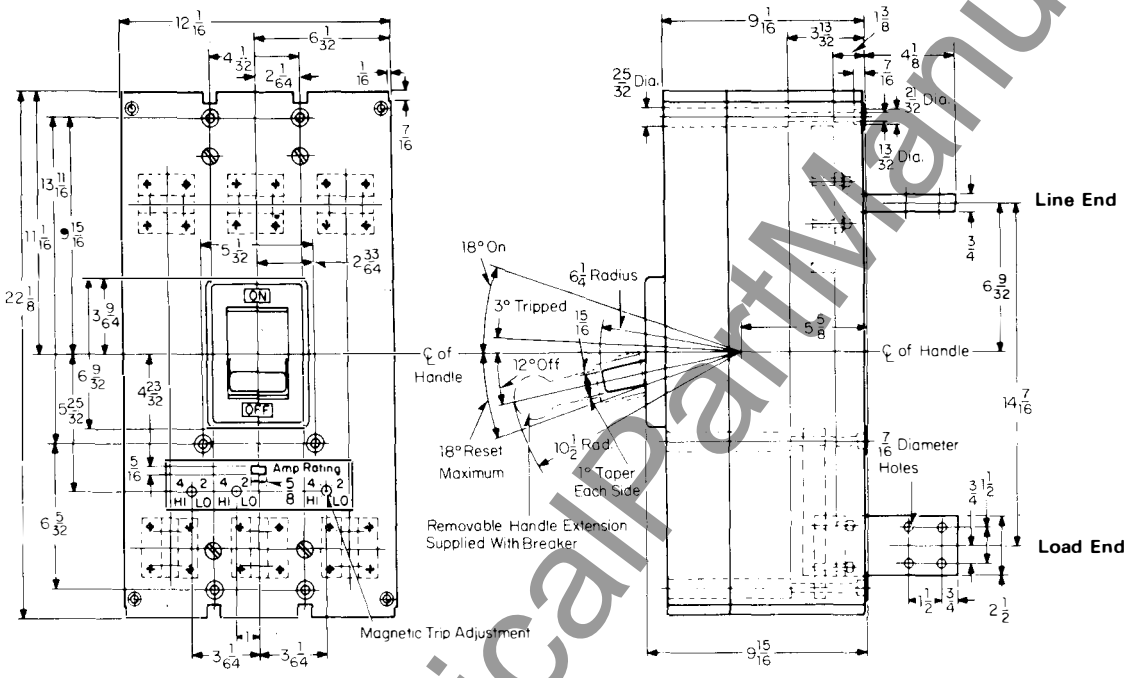

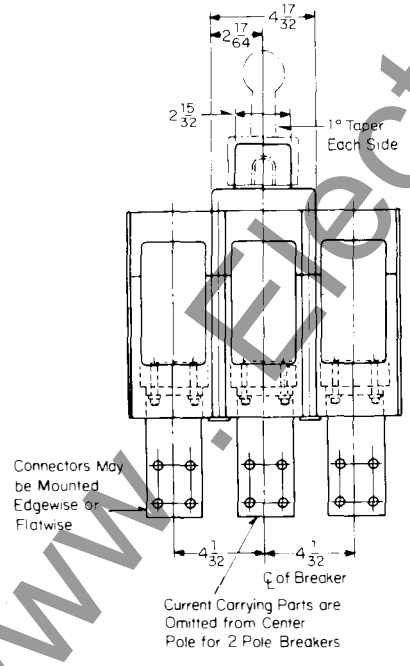

Drilling Plans
For Mounting Bolts

Line End

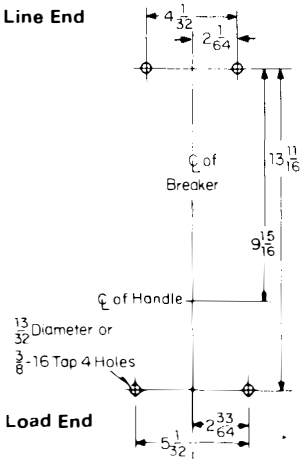

Load End

Front Cover Cutout

Line End

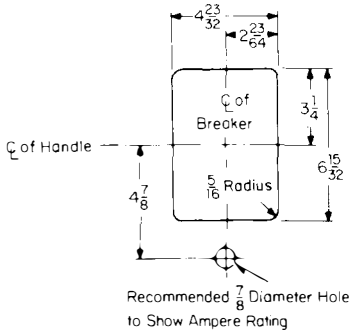

Load End

Reproduced From Drawing 654D460

www.ElectricalPartManuals.com

Type PBF Front Connected Breaker

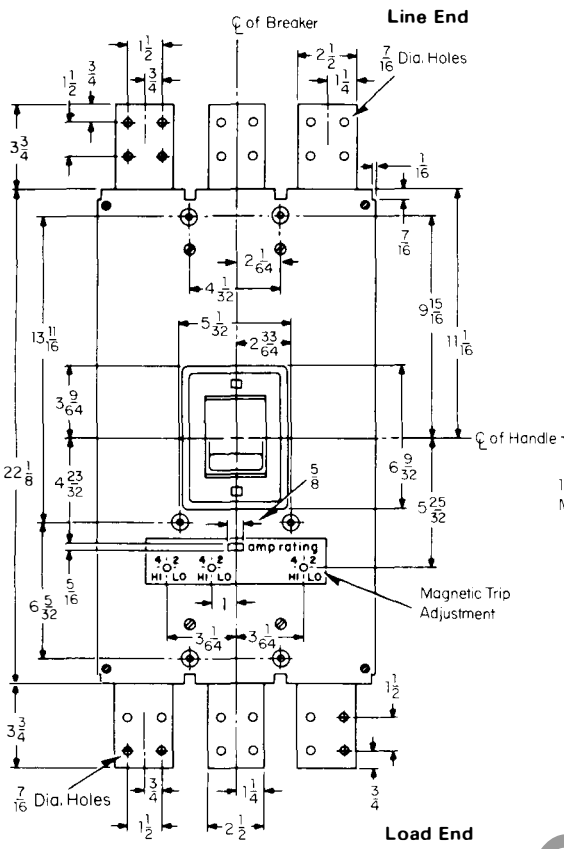

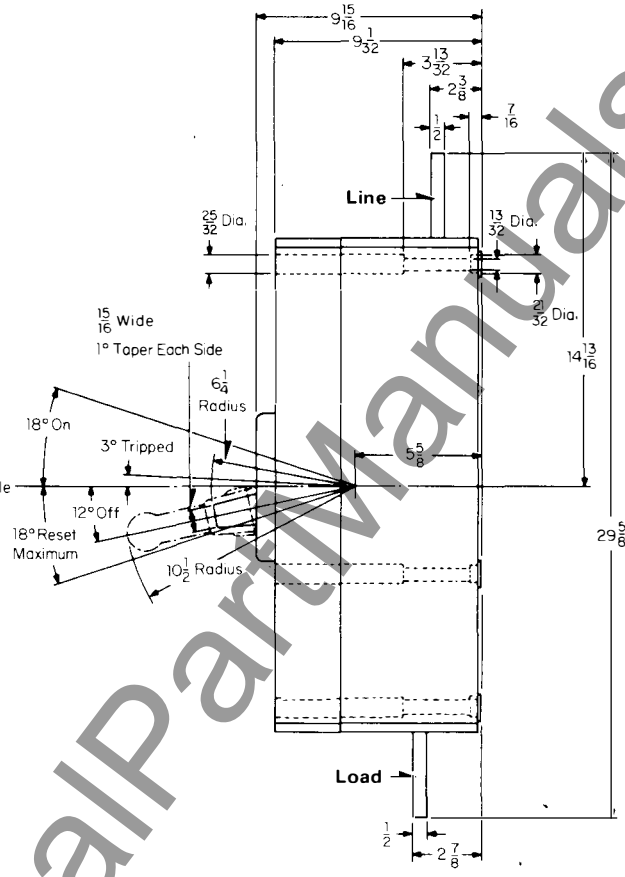

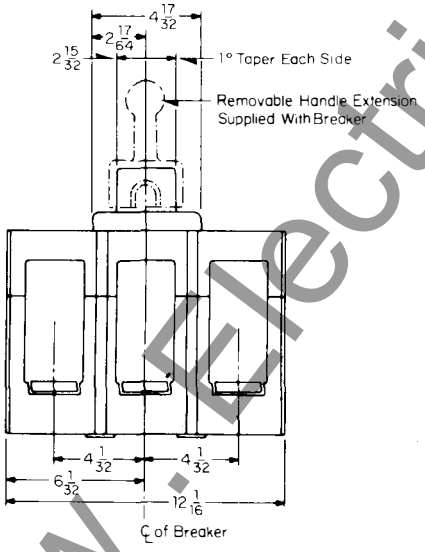

Drilling Plan

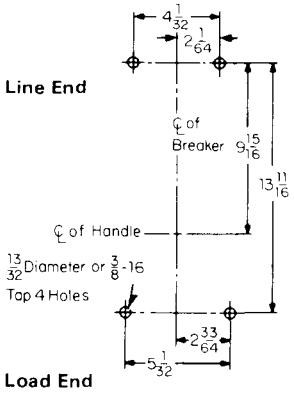

Front Cover Cutout

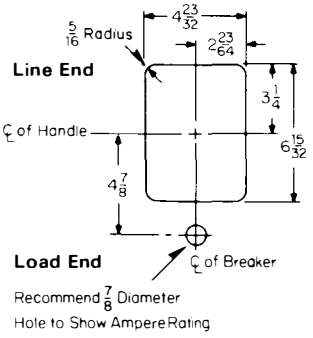

Reproduced From Drawing 375D565

Printed in U.S.A.

www.ElectricalPartManuals.com

May, 1982
Supersedes Dimension Sheet 29-170, pages 39-40, dated October, 1981
Mailed to: E, D, C/1901, 1928, 1929/PL

Page 39: Type PB 2000 Ampere Fuse Mounting Base
Page 40: Type PB 2500 Ampere Rear Connected

AB DE-ION® Circuit Breakers

Fuse Mounting Base for Type PB 2000 BreakerⒸ

Standard Back Connection

Breaker Dimension Reference:
Front Connection Drawing 375D565
Back Connection Drawing 654D460

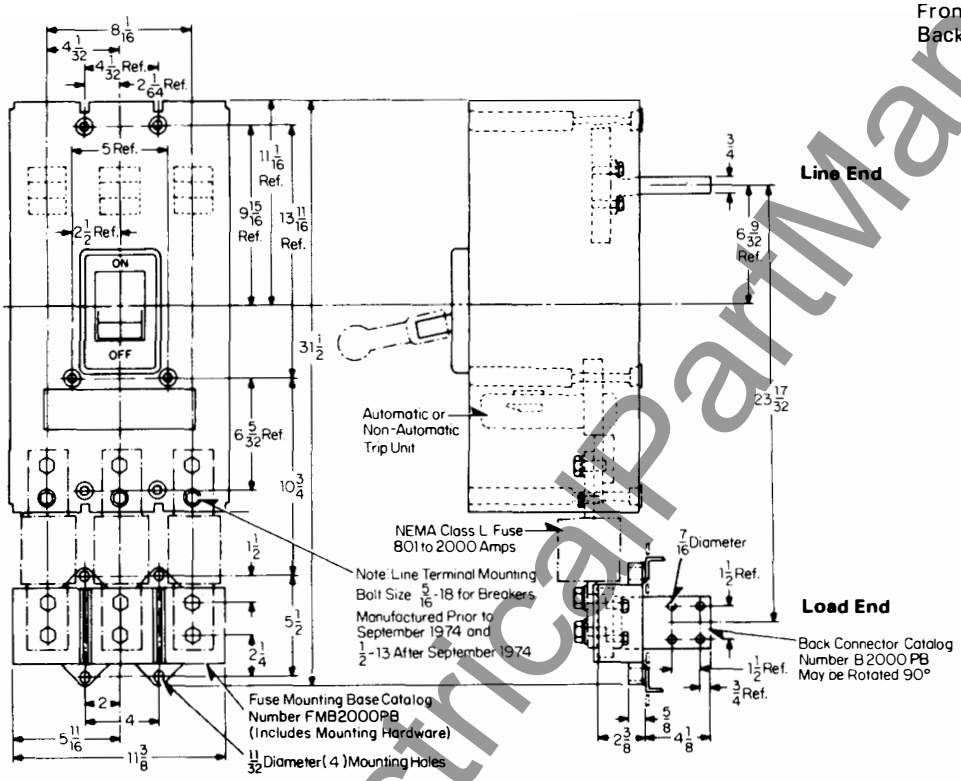

Direct Bus Connection

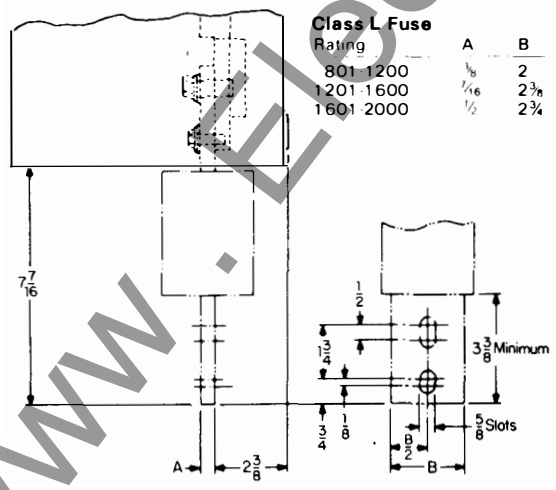

Class L Fuse

Rating	A	B
801-1200	1/8	2
1201-1600	1/16	2 3/8
1601-2000	1/2	2 3/4

Cable Connection

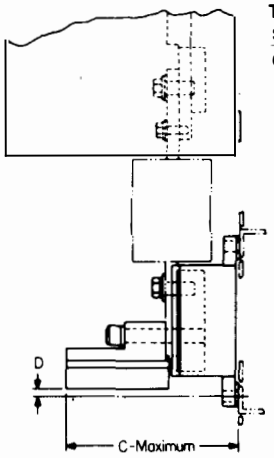

Terminals

Style No	Wire Range	C Max	D
672B655G01	3/0-400 MCM Triple Cable	5 11/32	5/8
1B0C046G03	400-500 MCM 4 Cables	6 3/4	9/32

Reproduced From Drawing 4975D99

Ⓒ Changed since previous issue.

www.ElectricalPartManuals.com

Type PB 2500 Rear Connected Breakers©

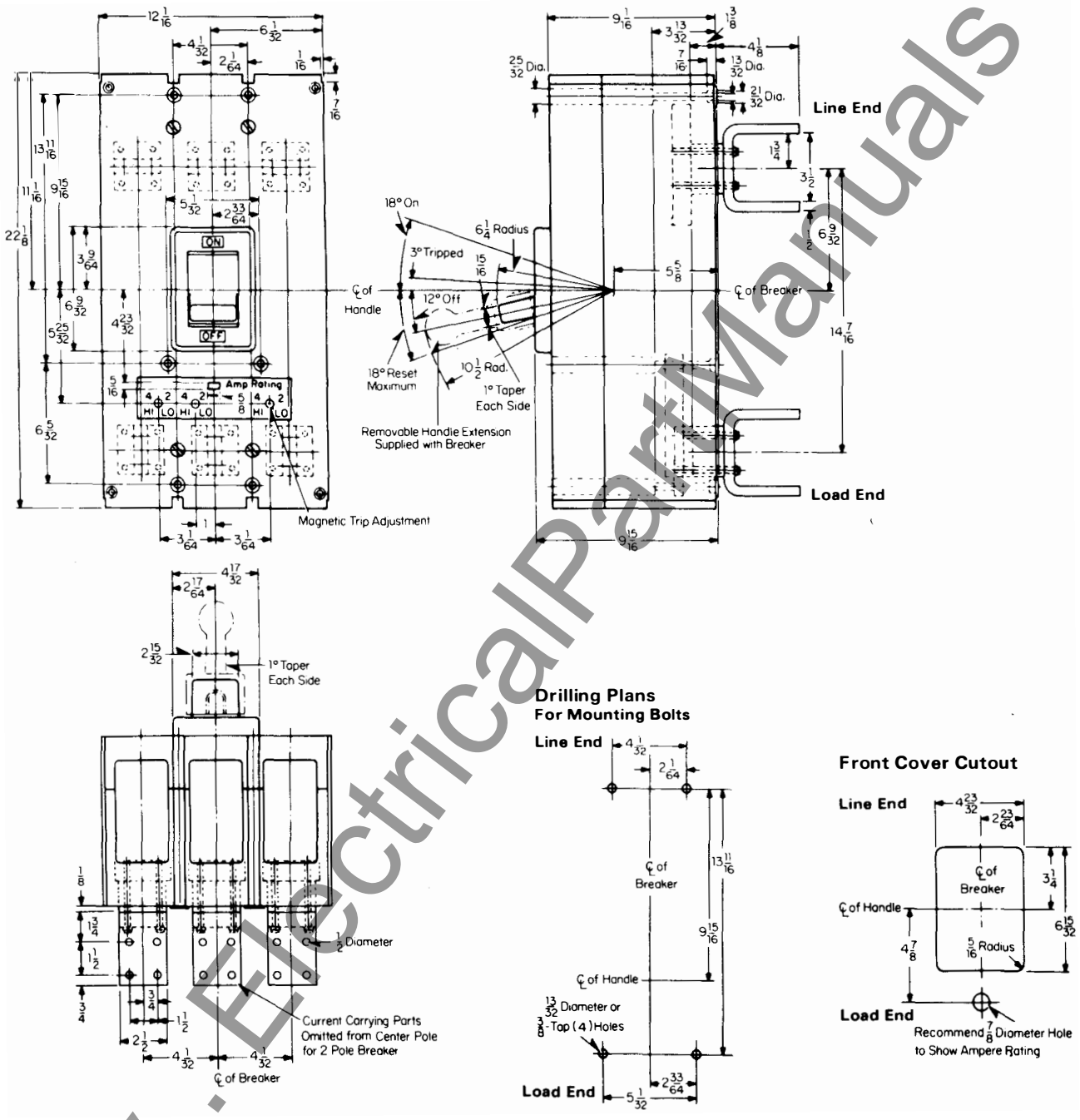

Reproduced From Drawing 4981D40

© Changed since previous issue.

Printed in USA

www.ElectricalPartManuals.com

October, 1977
Supersedes Dimension Sheet 29-170
all previous issues.
Mailed to: E, D, C/1901, 1928, 1929/PL

Types PC, PCC SELTRONIC™ Circuit Breakers

Page 41: 2000 and 2500 Amperes
Page 42: 3000 Amperes

AB DE-ION® Circuit Breakers

Type PC, PCC 2000 and 2500 Rear Connected Breakers

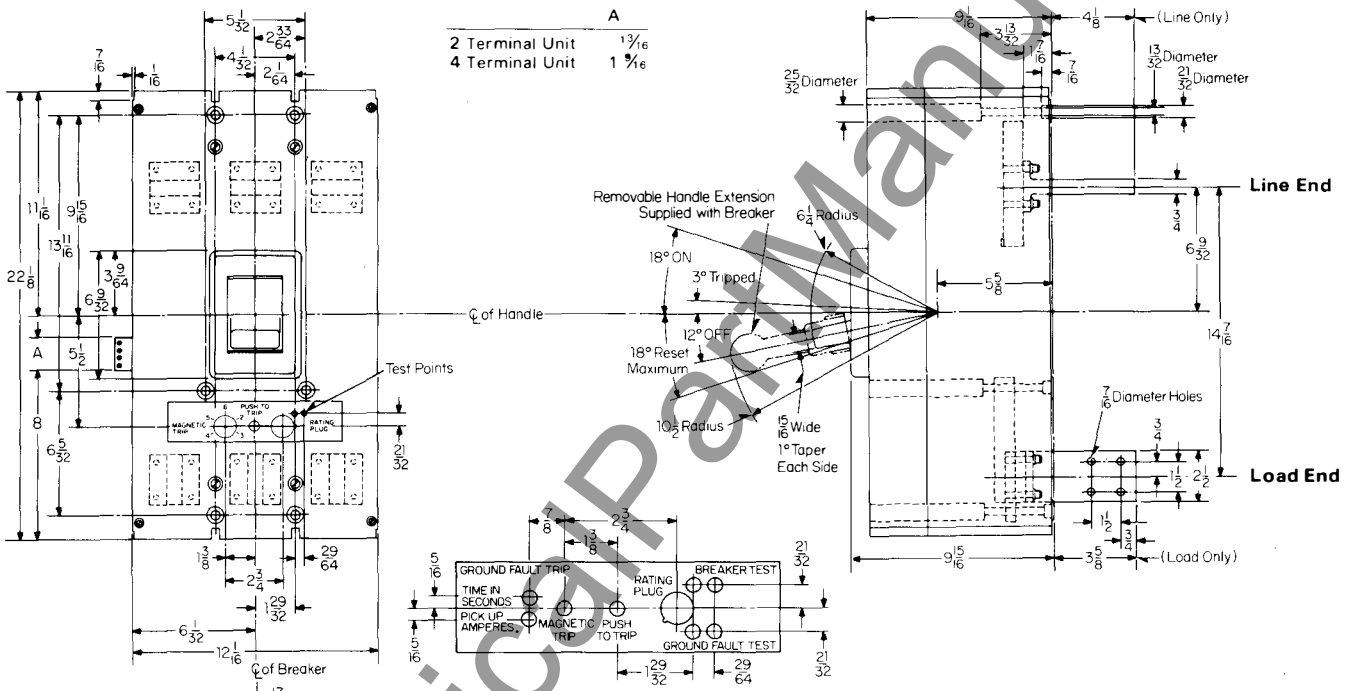

Nameplate (Used with Ground Fault Trip)

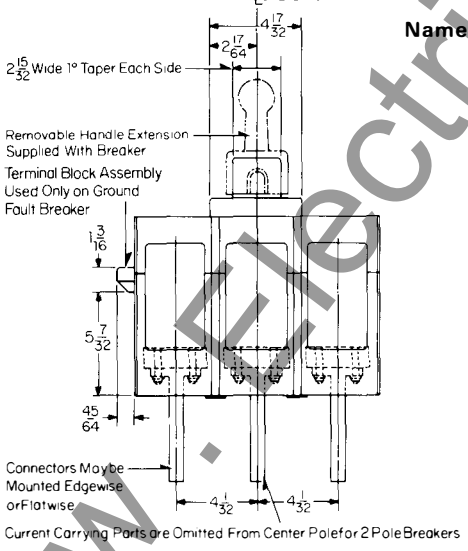

Drilling Plan
For Mounting Bolts

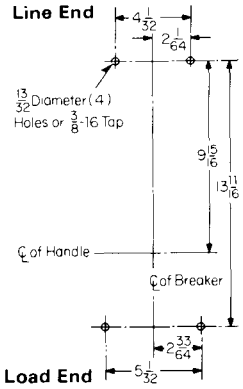

Front Cover Cutout

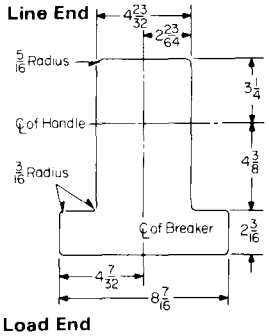

Reproduced from Drawing 2606D79

www.ElectricalPartManuals.com

Type PC, PCC 3000 Rear Connected Breakers

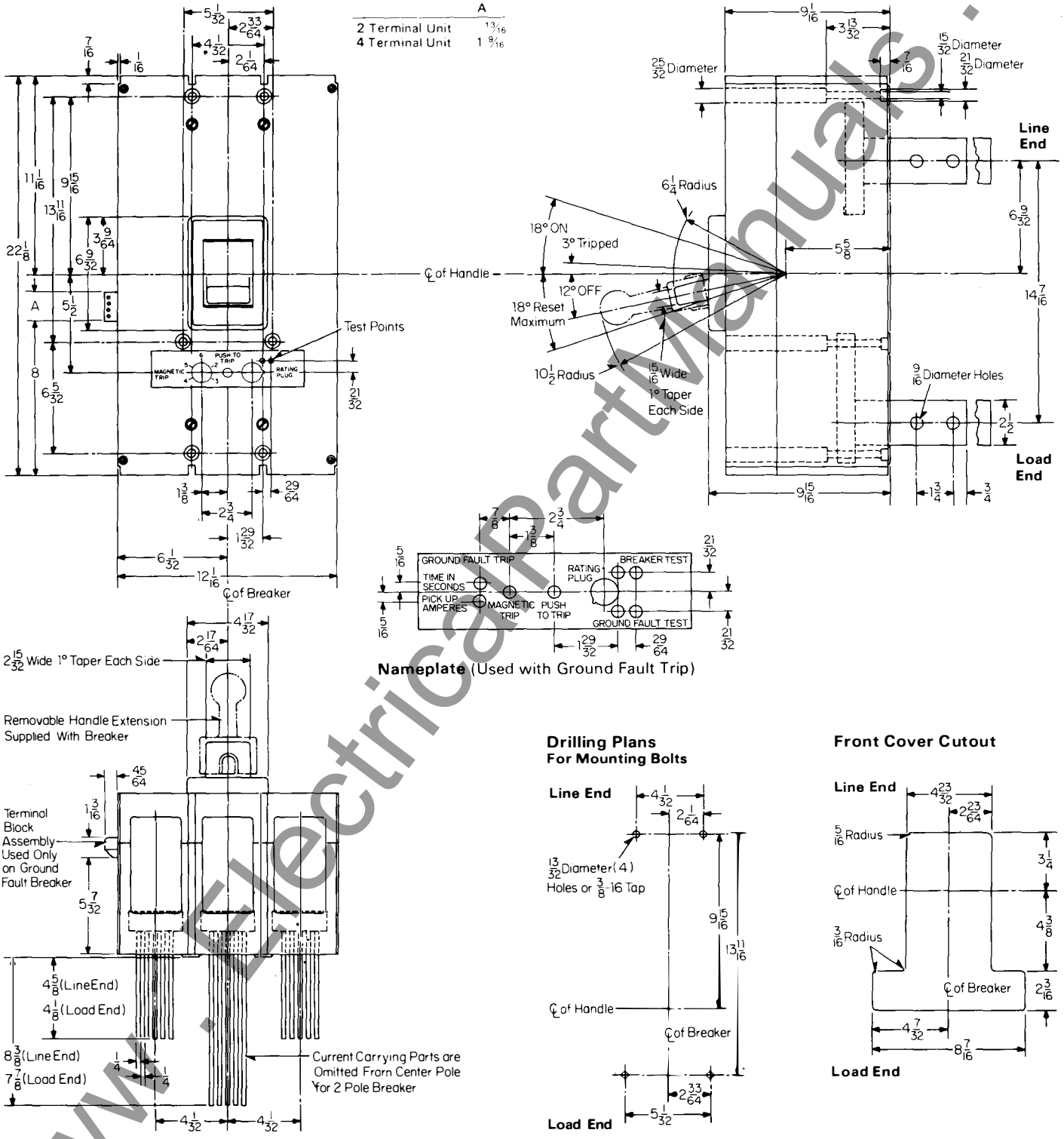

Reproduced from Drawing 2606D80

Printed in U.S.A.

www.ElectricalPartManuals.com

October, 1977
Supersedes Dimension Sheet 29-170
all previous issues.
Mailed to: E, D, C/1901, 1928, 1929/PL

SELTRONIC™ Circuit Breakers

Page 43: Types PCF, PCCF, PCFG, PCCFG, 2000 and 2500 Amp Front Connected
Page 44: Ground Fault Indicator kit

AB DE-ION® Circuit Breakers

Type PCF, PCCF, PCFG, PCCFG 2000, 2500 Breakers

Rating	A	B	C
2000 Amp	2½	1¼	½
2500 Amp	3	1½	1

	D
2 Terminal Unit	1 3/16
4 Terminal Unit	1 9/16

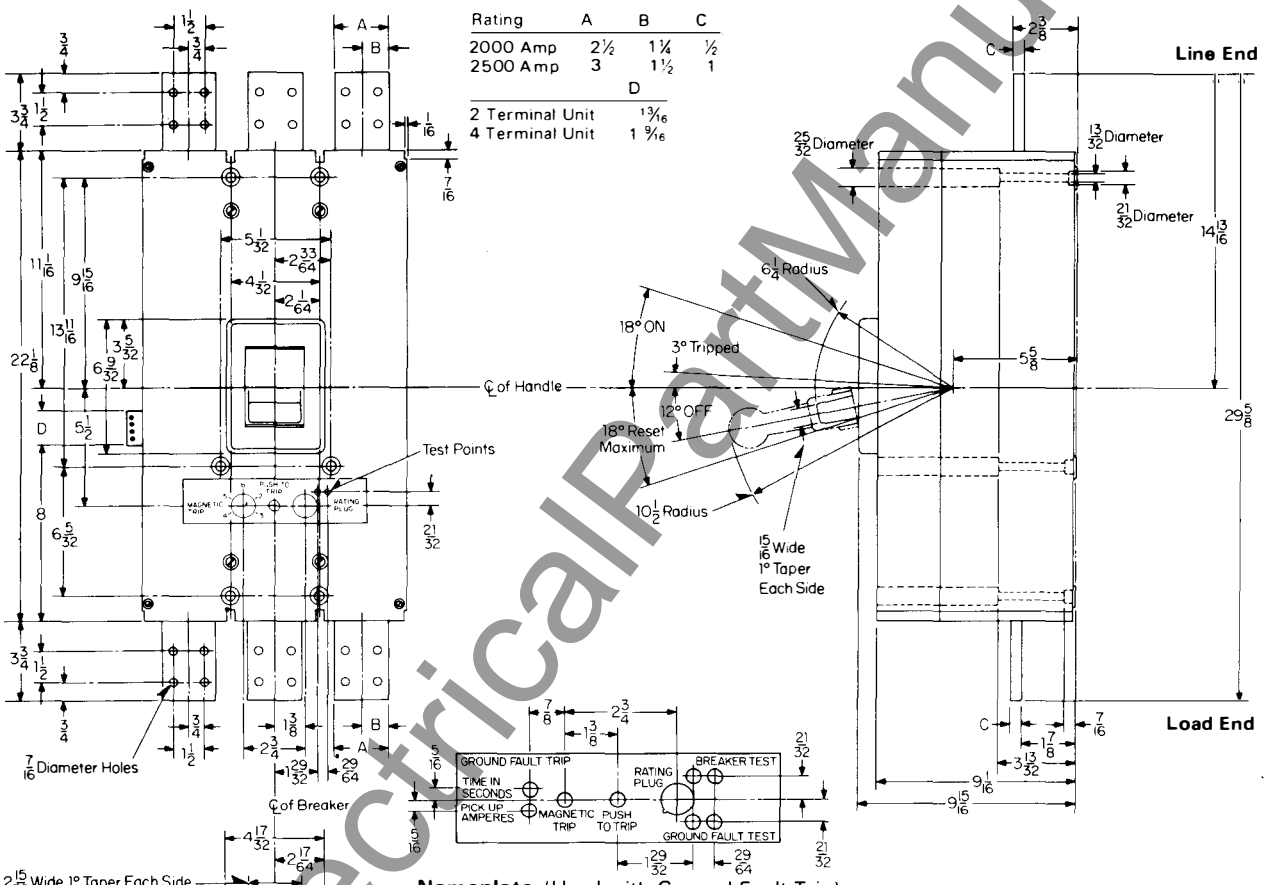

Nameplate (Used with Ground Fault Trip)

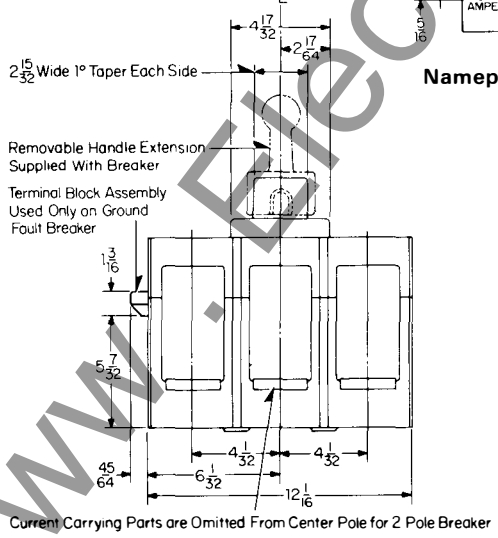

Drilling Plans
For Mounting Bolts

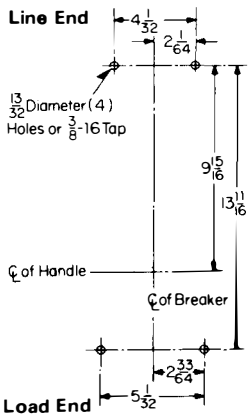

Front Cover Cutout

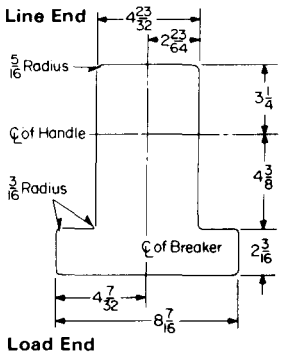

Reproduced from Drawing 2605D27

www.ElectricalPartManuals.com

Ground Fault Indicator Kit for SELTRONIC™ Breakers

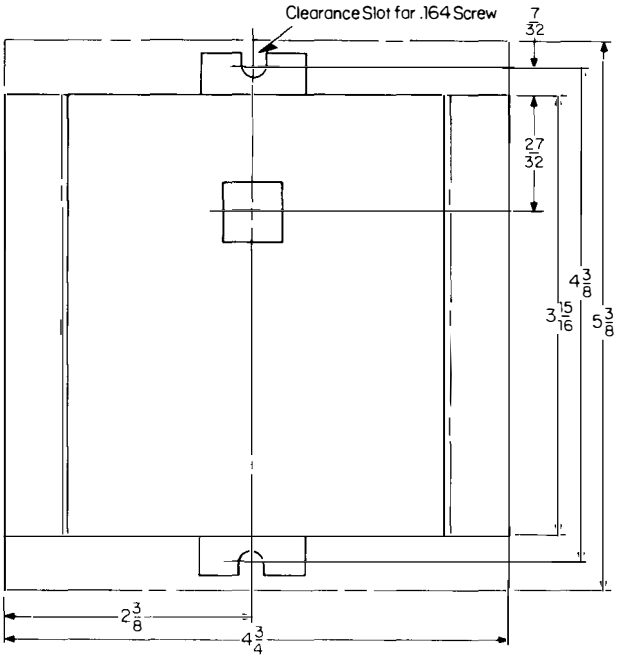

Drilling Plan and Cutout
For Face Mounting Bracket

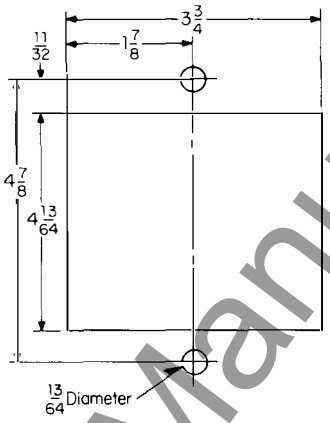

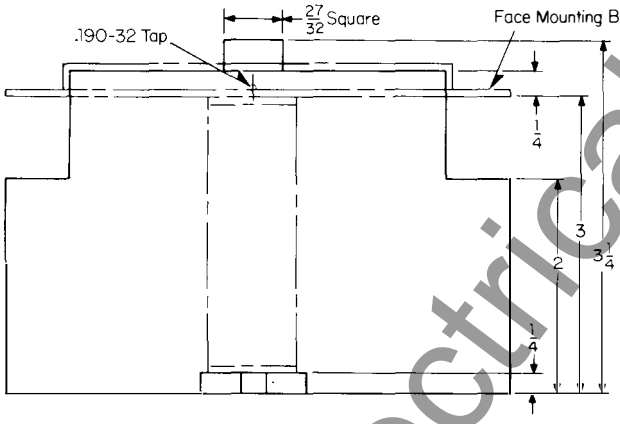

Reproduced From Drawing 750B870

Westinghouse Electric Corporation
Low Voltage Breaker Division
Beaver, Pennsylvania 15009

Printed in U.S.A.

www.ElectricalPartManuals.com

March, 1985
Supersedes Dimension Sheet 29-170
pages 45-46 dated October, 1977
Mailed to: E, D, C/29-100A

External (Fourth) Current Monitor
Used with SELTRONIC™ Breakers with
Built-in Ground Fault Protection

AB DE-ION® Circuit Breakers

LCG and HLCG Breakers,
LCL Breakers,
MCG and HMCG Breakers

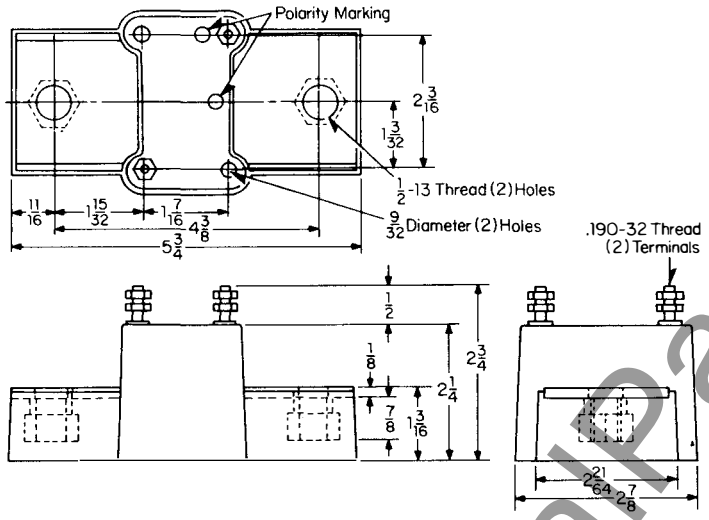

PCG, PCCG, PCFG and PCCFG Breakers

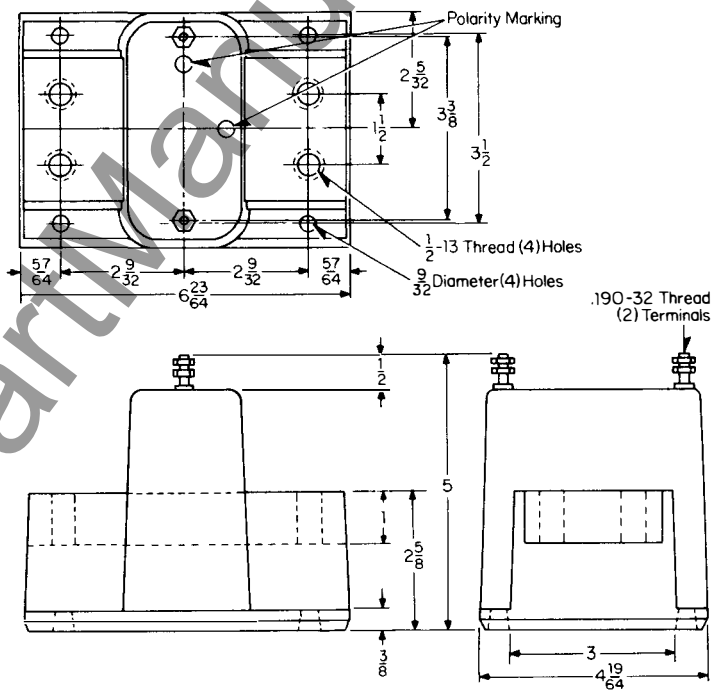

NCG and HNCG Breakers

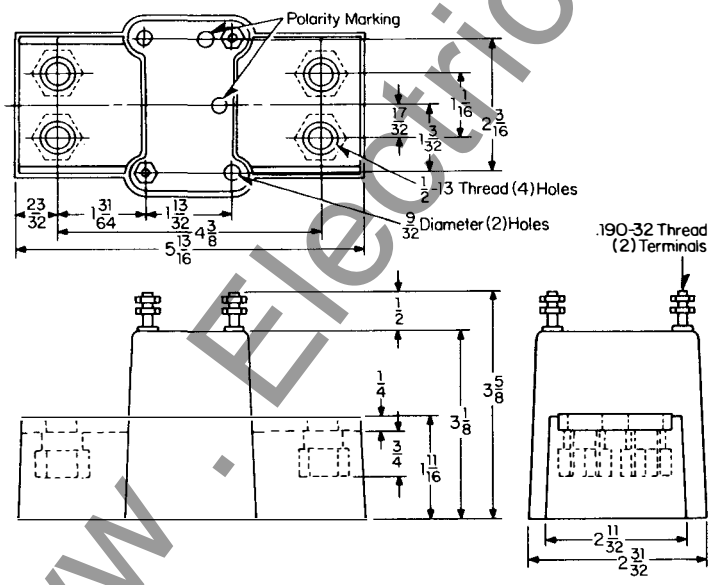

www . ElectricalPartManuals . com

www.ElectricalPartManuals.com

Printed in USA

Westinghouse Electric Corporation
Distribution and Protection Business Unit
Commercial Division – Components
Beaver, Pennsylvania 15009

June, 1979
New Information
Mailed to: E, D, C/1901, 1928, 1929/DS

Type FCL and LCL Current Limit-R Current Limiting Breakers

Page 46.1: Type FCL, 15-100 Amperes
Page 46.2: Type LCL, 125-400 Amperes

AB DE-ION® Circuit Breakers

Type FCL Current Limiting Breaker

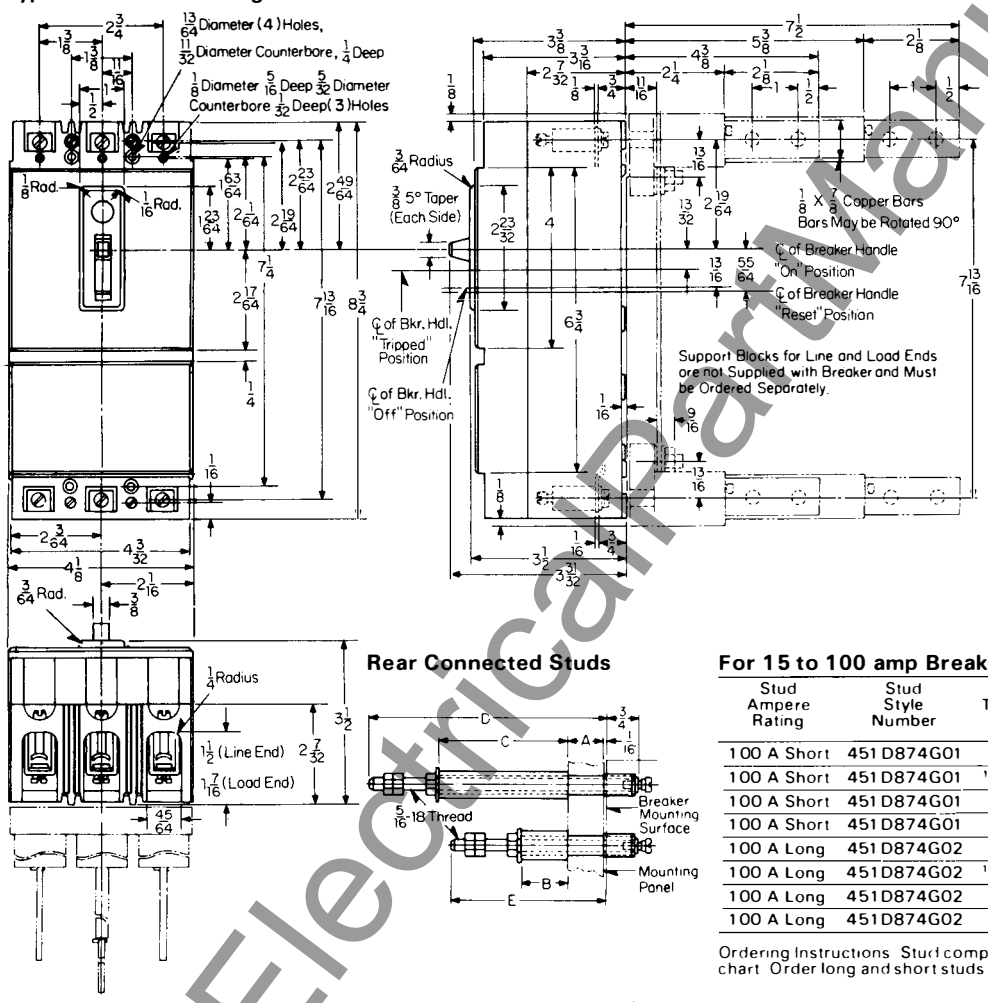

Terminal Arrangements

Wire Connection

Removable Connector UL Listed Wire Range 14 to 1/0 CU 12 to 1/0 AL Will Accomodate 14 to 3/0 Wire

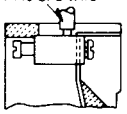

Stud Connection

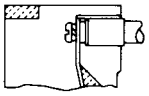

Plug-in or Bolt-on Connection

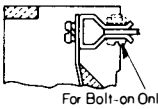

Bus Connection

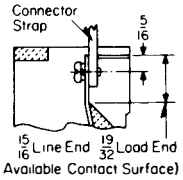

Plug-in
Bolt stab to breaker conductor, then plug into support block.

Bolt-on
Bolt stab to support block, then bolt support block assembly to breaker conductors.

Rear Connected Studs

For 15 to 100 amp Breakers

Stud Ampere Rating	Stud Style Number	Panel Thickness A	Tube Length B	Tube Length C	Tube Style Number	D	E
100 A Short	451D874G01	1"	1 1/16		32B9446H20		3 5/8
100 A Short	451D874G01	1 1/16 to 1 5/16	1 3/8		32B9446H21		
100 A Short	451D874G01	3/8 to 5/8	1 11/16		32B9446H22		
100 A Short	451D874G01	1/4 to 5/16	2		32B9446H23		
100 A Long	451D874G02	1"		3 7/16	32B9446H24	6 1/8	
100 A Long	451D874G02	1 1/16 to 1 5/16		3 3/4	32B9446H25		
100 A Long	451D874G02	3/8 to 5/8		4 1/16	32B9446H26		
100 A Long	451D874G02	1/4 to 5/16		4 3/8	32B9446H27		

Ordering Instructions Stud complete consists of one stud assembly and one tube as per chart Order long and short studs and tubes as required to obtain proper bus spacing

Drilling Plans

For Mounting Bolts

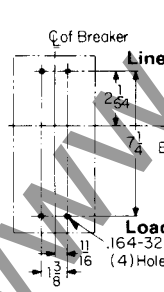

For Rear Connected Studs

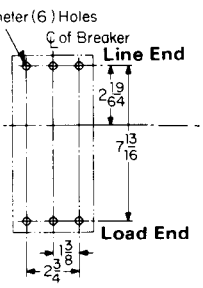

For Plug-in Block

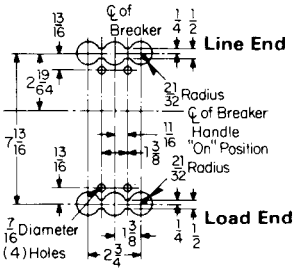

Front Cover Cutout

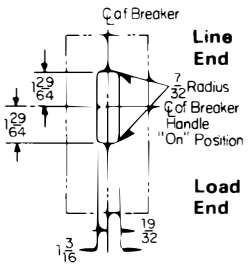

Reproduced From Drawing 2614D90

www.ElectricalPartManuals.com

Type LCL 400 Amp Frame Current Limiting Breaker

Terminal Arrangements

For Use With Copper Cable Only (Supplied As Standard)

Cable	Catalog Number	Ampere Rating	Wire Size
Single	T225LA	125-225	#6-350 MCM
Double	T401LA	250-400	4-250 and 3/0-600 MCM

For Use With Cu/Al Cable (Must Be Specified)

Single	TA225LA1	125-225	#6-350 MCM Cu or #4-350 MCM Al
Double	TA400LA1	250-400	#4-250 MCM Cu/Al Plus 3/0-600 MCM Cu/Al

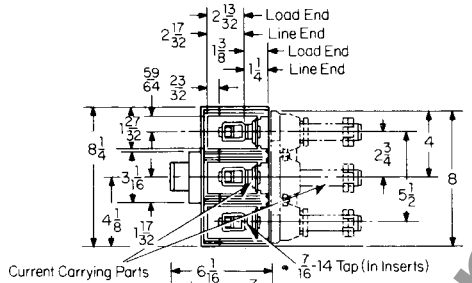

Rear Connected Studs

Stud Ampere Rating	Stud Style Number	Thread Size	Dimension A
125-225	1241345	½-13	3 3/16
125-225	1241392	½-13	4 15/16
125-225	1241346	½-13	6¼
250-400	05B7383G15	¾-16	5 15/32
250-400	05B7383G16	¾-16	7 31/32
250-400	05B7383G17	¾-16	10 15/32

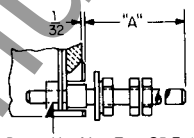

Do not Use More Than 25 Ft. Lbs. Torque to Tighten Nuts

Plug-in Adapter Kit

Poles	Ampere Rating	Kit Style Number	Thread Size
2	125-400	313C644G25	¾-16
3	125-400	313C644G26	¾-16

Do not Use More Than 25 Ft.Lbs. Torque to Tighten Nuts

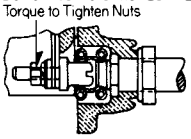

Line End

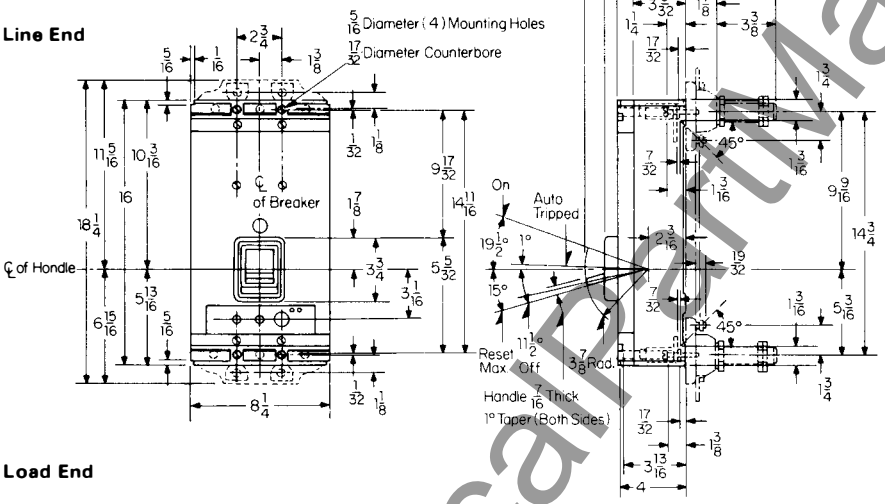

Load End

Drilling Plans

For Plug-In Block

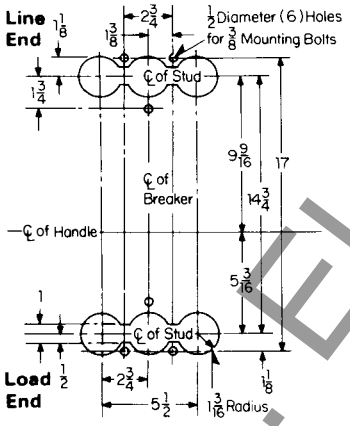

Rear Connected Studs
(For Non-Conductive Panels)

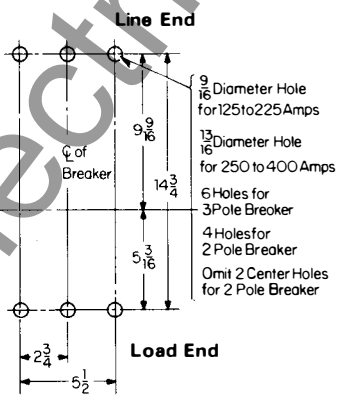

For Mounting Bolts

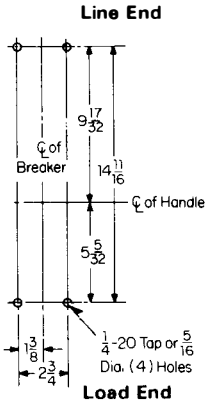

Front Cover Cutout

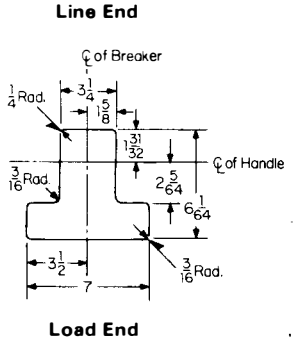

Reproduced From Drawing 1371D33

Printed in U.S.A.

www.ElectricalPartManuals.com

October, 1977
Supersedes Dimension Sheet 29-170
all previous issues.
Mailed to: E, D, C/1901, 1928, 1929/PL

Type FB and LA TRI-PAC® Circuit Breakers

Page 47: Type FB TRI-PAC Breaker
Page 48: Type LA TRI-PAC Breaker

AB DE-ION® Circuit Breakers

Type FB TRI-PAC Breaker

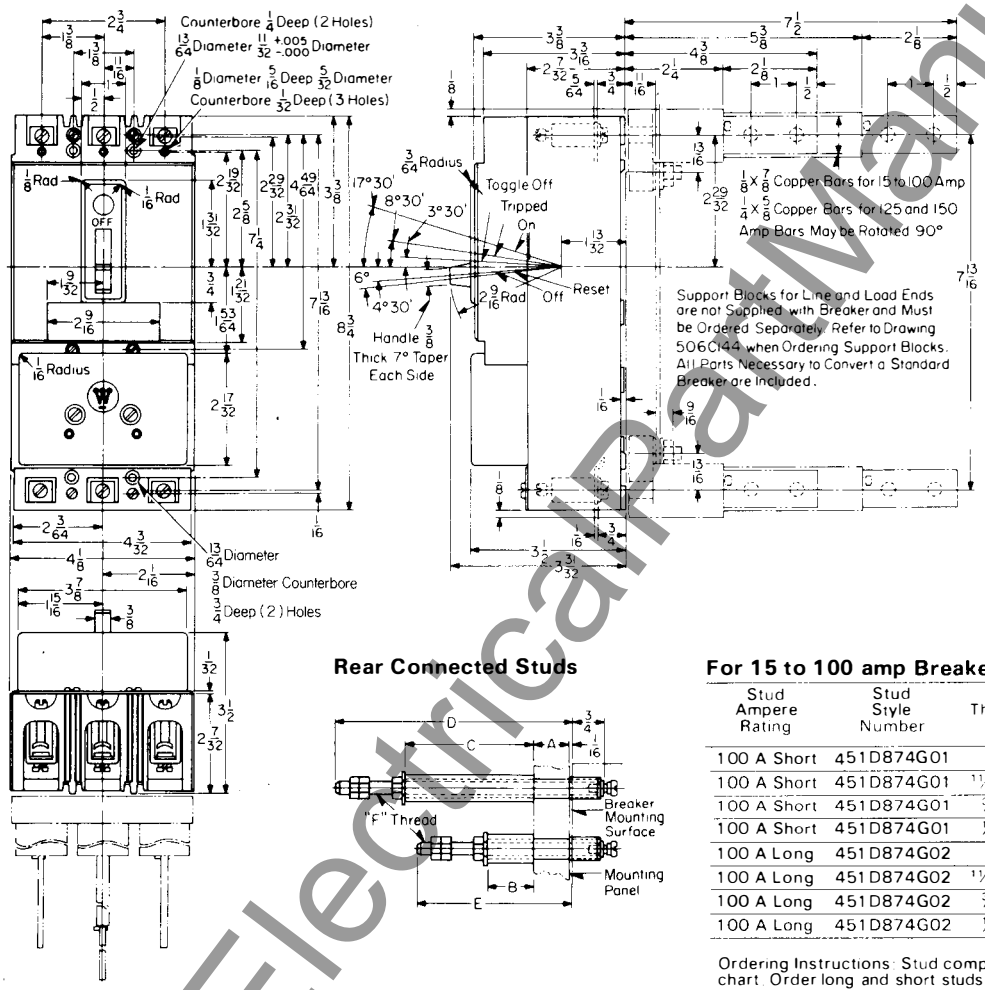

Terminal Arrangements

Wire Connection

Removable Connector UL Listed Wire Range 14 to 1/0 CU 12 to 1/0 AL Will Accomodate 14 to 3/0 Wire

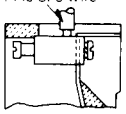

Stud Connection

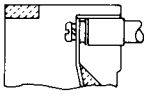

Plug-in or Bolt-on Connection

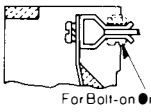

Bus Connection

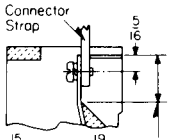

Plug-in
Bolt stab to breaker conductor, then plug into support block.

Bolt-on
Bolt stab to support block, then bolt support block assembly to breaker conductors.

Rear Connected Studs

For 15 to 100 amp Breakers

Stud Ampere Rating	Stud Style Number	Panel Thickness A	Tube Length B	Tube Length C	Tube Style Number	D	E	F
100 A Short	451D874G01	1"	1 1/16		32B9446H20			
100 A Short	451D874G01	11/16 to 15/16	1 3/8		32B9446H21			
100 A Short	451D874G01	3/8 to 5/8	1 11/16		32B9446H22	6 1/8	3 5/8	5/16
100 A Short	451D874G01	1/4 to 5/16	2		32B9446H23			18
100 A Long	451D874G02	1"		3 7/16	32B9446H24			
100 A Long	451D874G02	11/16 to 15/16		3 3/4	32B9446H25			
100 A Long	451D874G02	3/8 to 5/8		4 1/16	32B9446H26			
100 A Long	451D874G02	1/4 to 5/16		4 3/8	32B9446H27			

Ordering Instructions: Stud complete consists of one stud assembly and one tube as per chart. Order long and short studs and tubes as required to obtain proper bus spacing.

Drilling Plans

For Mounting Bolts

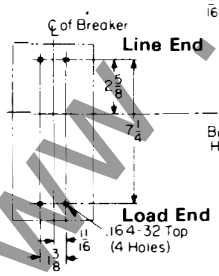

For Rear Connected Studs

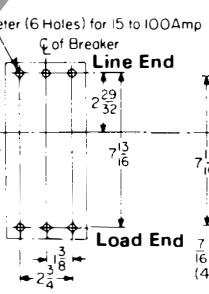

For Plug-in Block

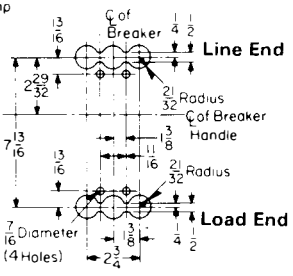

Front Cover Cutout

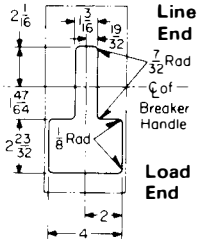

Reproduced From Drawing 4979D67

www.ElectricalPartManuals.com

Type LA TRI-PAC® Breaker

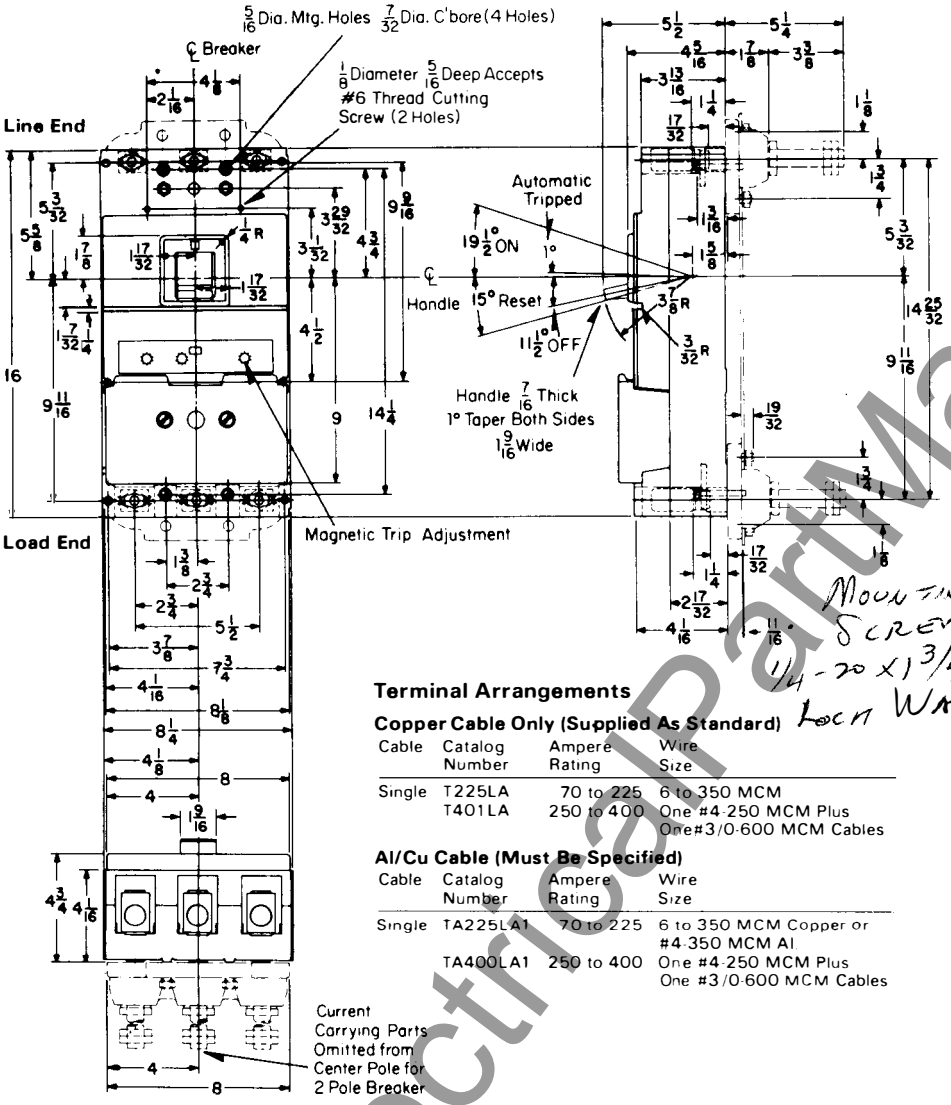

MOUNTING SCREW 1/4-20 X 1 3/4 WITH LOCK WASHER

Rear Connected Studs

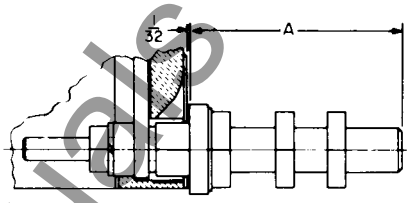

Ampere Rating	Style Number	Dimension A	Thread Size
70-225	1241345	3 7/32	1/2-13
70-225	1241346	6 9/32	1/2-13
70-225	1241392	4 3/32	1/2-13
250-400	05B7383G15	5 15/32	3/4-16
250-400	05B7383G16	7 31/32	3/4-16
250-400	0587383G17	10 15/32	3/4-16

Plug-In Adapter Kit

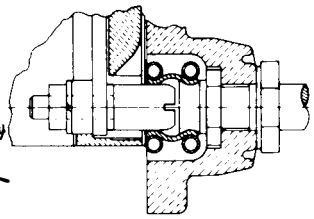

Poles	Ampere Rating	Style Number	Thread Size
2	250-400	313C644G41	3/4-16
3	250-400	313C644G42	3/4-16

Terminal Arrangements

Copper Cable Only (Supplied As Standard)

Cable	Catalog Number	Ampere Rating	Wire Size
Single	T225LA	70 to 225	6 to 350 MCM
	T401LA	250 to 400	One #4-250 MCM Plus One #3/0-600 MCM Cables

Al/Cu Cable (Must Be Specified)

Cable	Catalog Number	Ampere Rating	Wire Size
Single	TA225LA1	70 to 225	6 to 350 MCM Copper or #4-350 MCM Al
	TA400LA1	250 to 400	One #4-250 MCM Plus One #3/0-600 MCM Cables

Drilling Plans

For Mounting Bolts

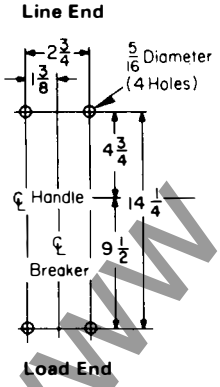

For Rear Connected Studs

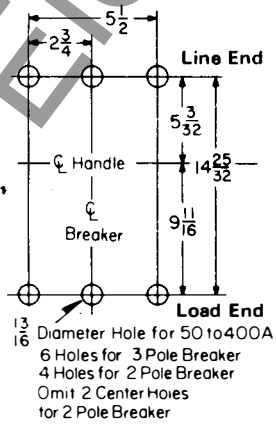

For Plug-In Block

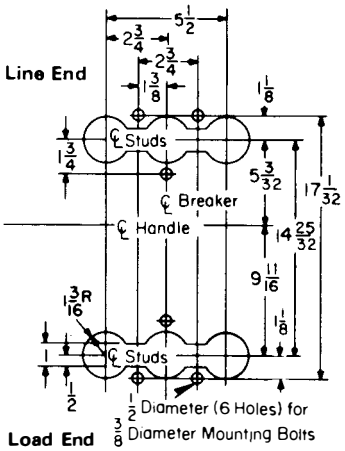

Front Cover Cutout

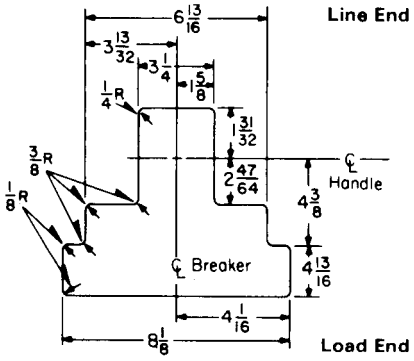

Reproduced from Drawing 655D300

www.ElectricalPartManuals.com

Printed in U.S.A.

November, 1981
Supersedes Dimension Sheet 29-170, pages 49-50, dated October, 1977
Mailed to: E, D, C/1901, 1928, 1929/PL

Type NB TRI-PAC® Circuit Breakers

Page 49: Outline Dimensions, Drilling Plans
Page 50: Mounting Block Dimensions

AB DE-ION® Circuit Breakers

Type NB, TRI-PAC® Breaker©

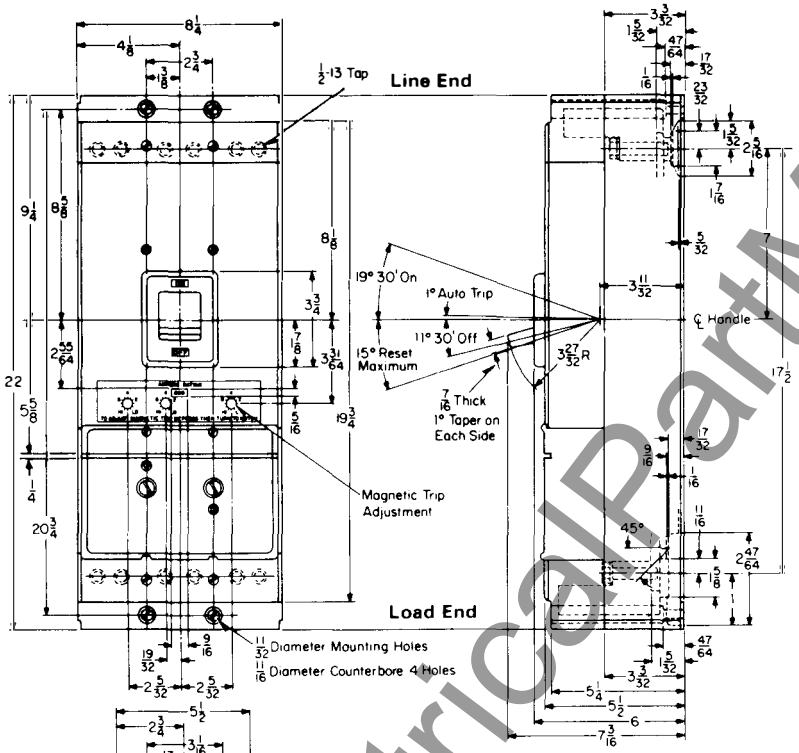

Bolted Rear Connected Studs

For 300 to 450 Amps

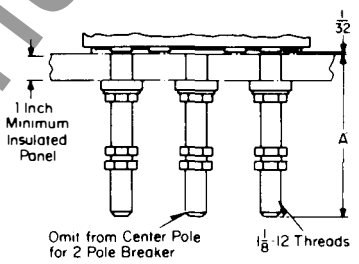

Style No	A
623B222G01	5½
623B222G02	8
623B222G03	10½

For 500 to 800 Amps Only

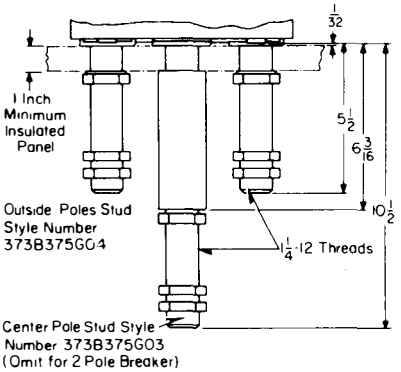

Front Connected Terminals

Amp Rating	Catalog No	Wire Size
For Copper Cable (Supplied as Standard)		
300 to 350	T350 NB	Single Cable 1 to 600 MCM
400 to 700	T700 NB 1	Double Cable 2/0 to 500 MCM
800	T1000 NB 1	Triple Cable 3/0 to 500 MCM
For AL/CU Cable (Must be Specified)		
300 to 700	TA700 NB 1	Two #1-500 MCM
800	TA1000 NB 1	Three #3/0-400 MCM

Drilling Plans

For Mounting Bolts

(Front Connected Terminals)

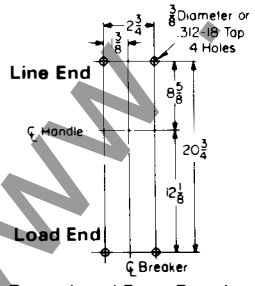

For Rear Connected Studs (Insulated Panel)

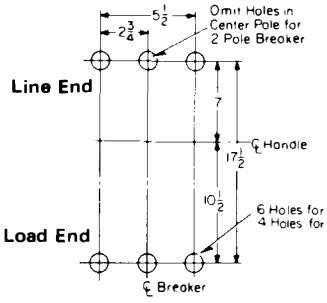

Amp Rating	Hole Dia
300-450	1 3/16
500-800	1 5/16

Front Cover Cutout

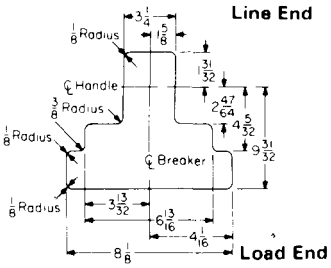

Reproduced From Drawing 372D515

© Changed since previous issue.

www.ElectricalPartManuals.com

Mounting Block for Type NB TRI-PAC® Breakers

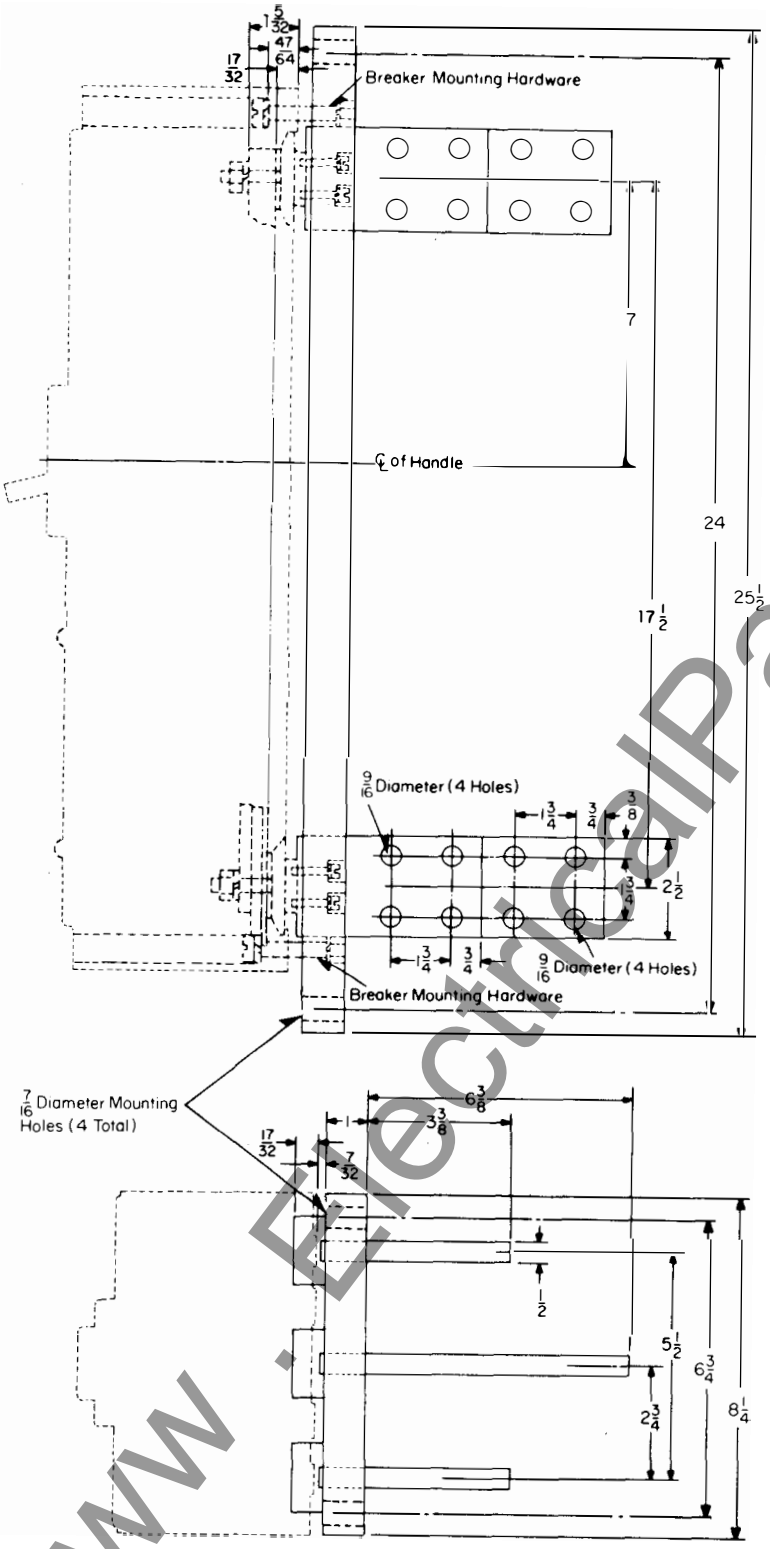

Reproduced From Drawing 4990D38

Printed in USA

www . ElectricalPartManuals . com

October, 1977
Supersedes Dimension Sheet 29-170
all previous issues.
Mailed to: E, D, C/1901, 1928, 1929/PL

Page 51: Type PB TRI-PAC®
Page 52: Motor Operator for Types EB, EHB, FB, HFB, DA, JA, KA, LB, LBB, HKA, HLB Breakers

AB DE-ION® Circuit Breakers

Type PB TRI-PAC® Breaker

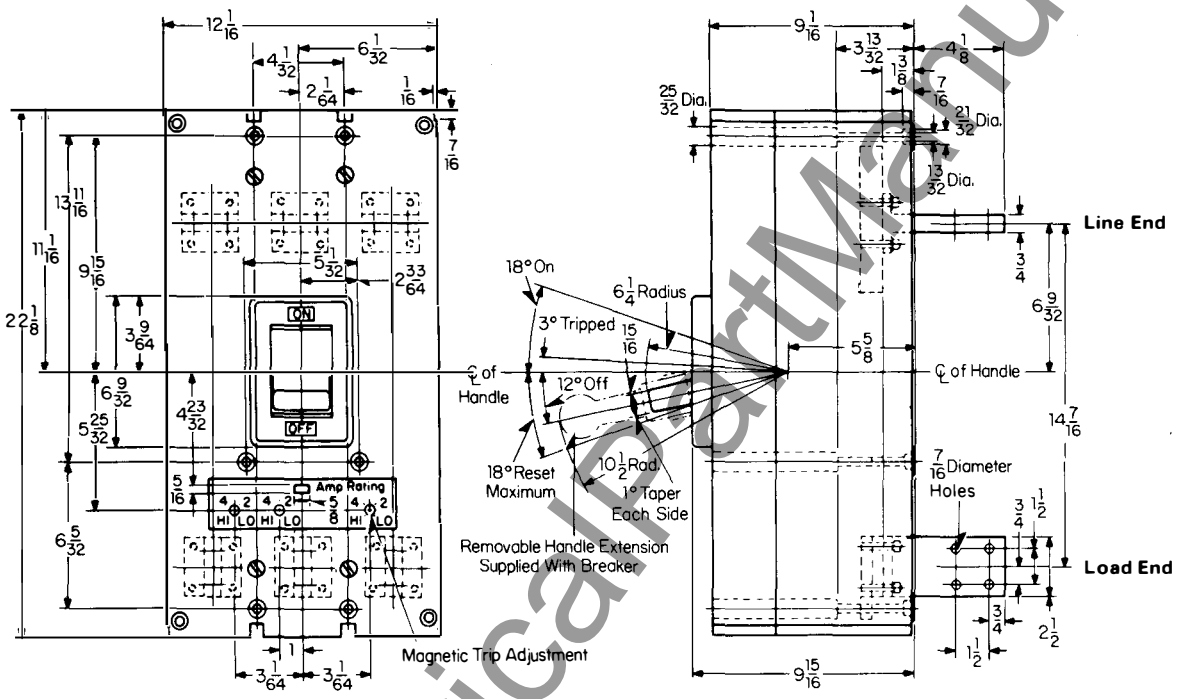

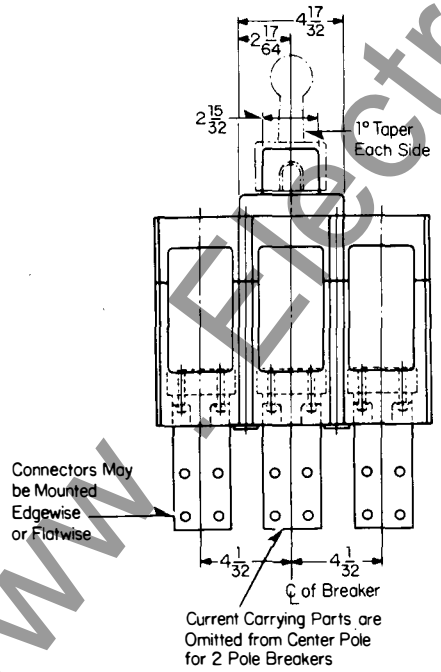

Drilling Plan
For Mounting Bolts

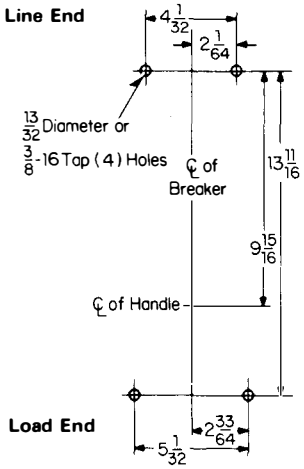

Front Cover Cutout

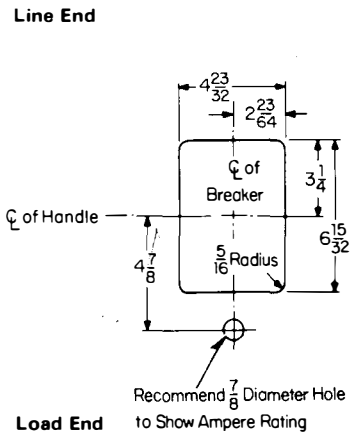

Reproduced From Drawing 654D460

www.ElectricalPartManuals.com

Motor Operators

EB, EHB, FB and HFB Breaker and Operator

Line End

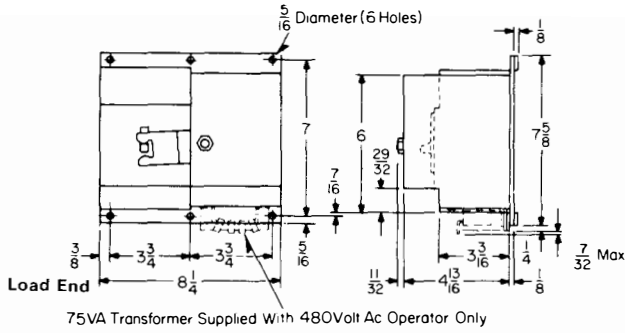

Drilling Plan

Line End

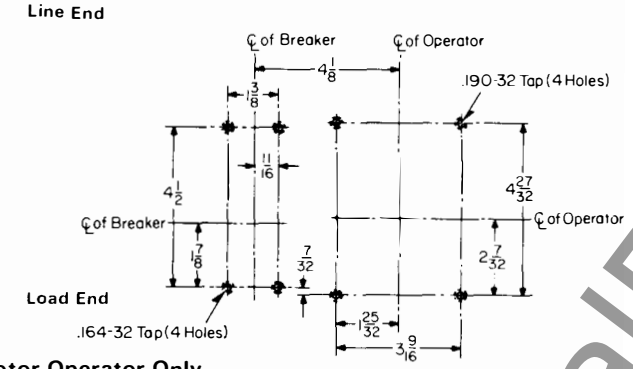

Motor Operator Only

Line End

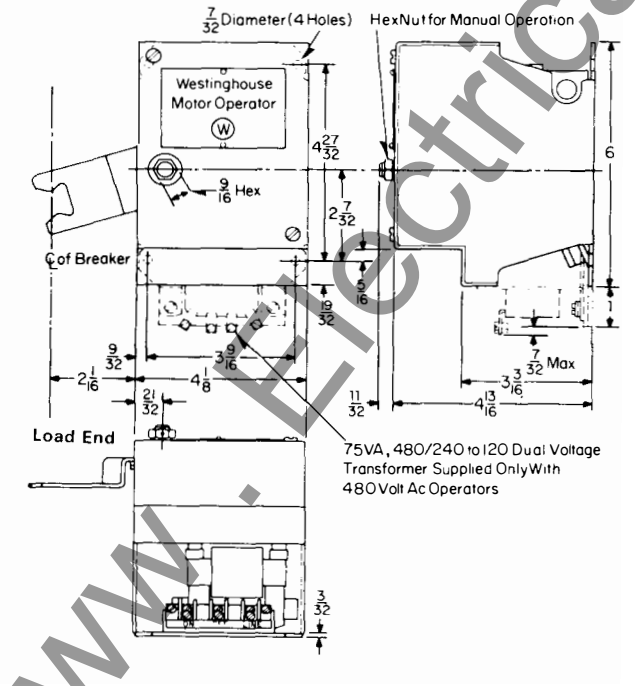

DA, JA, KA, LB, LBB, HKA and HLB Breaker and Operator

Line End

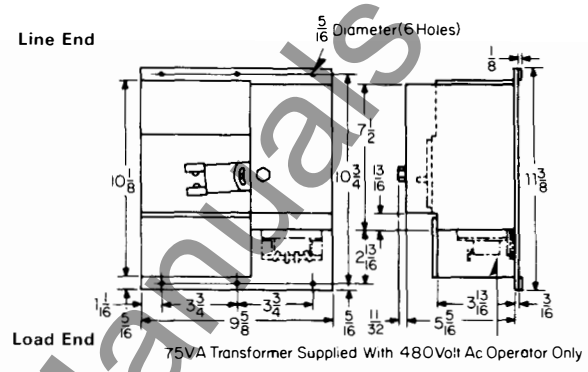

Drilling Plan

Line End

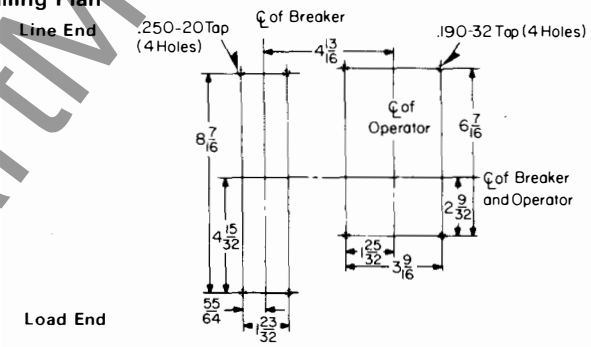

Motor Operator Only

Line End

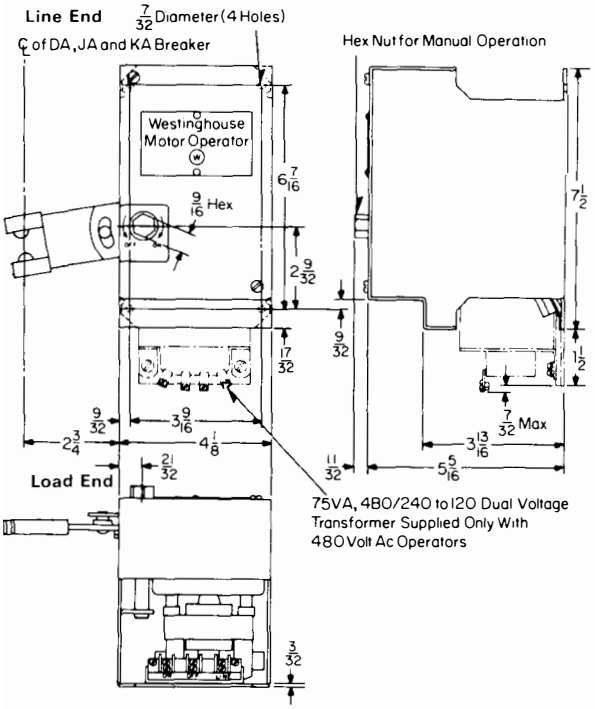

Reproduced From Drawings 4978D71 and 657D820

Printed in U.S.A.

www.ElectricalPartManuals.com

October, 1977
Supersedes Dimension Sheet 29-170
all previous issues.
Mailed to: E, D, C/1901, 1928, 1929/PL

Motor Operators for Types JB, KB, LAB, LA, LC Circuit Breakers

Page 53: For Types JB, KB
Page 54: For Types LAB, LA, LC

AB DE-ION® Circuit Breakers

Motor Operators

JB, KB and HKB Breaker and Operator
(Assembled to Base Plate)

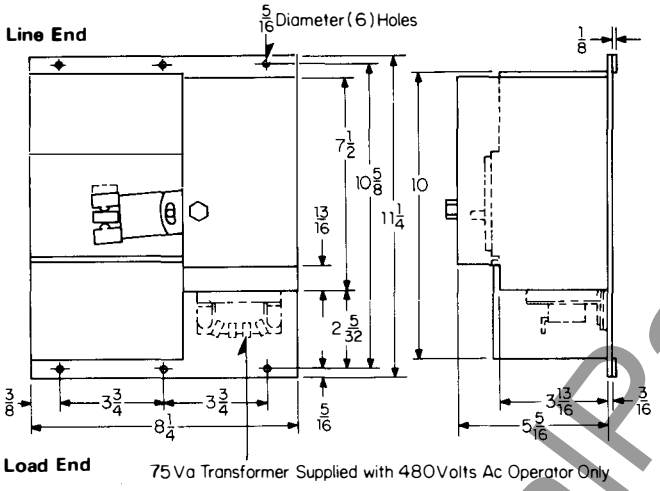

Drilling Plan

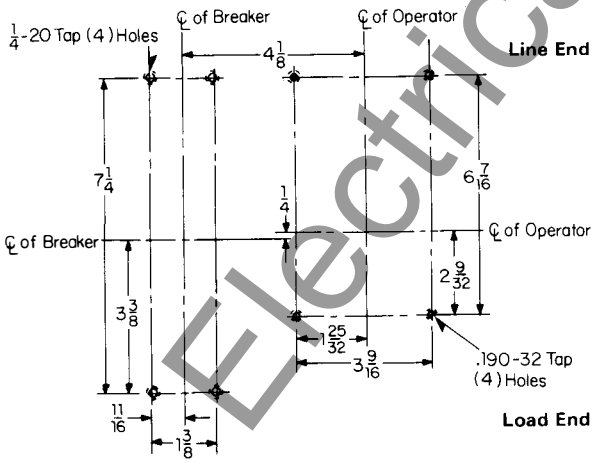

Motor Operator Only

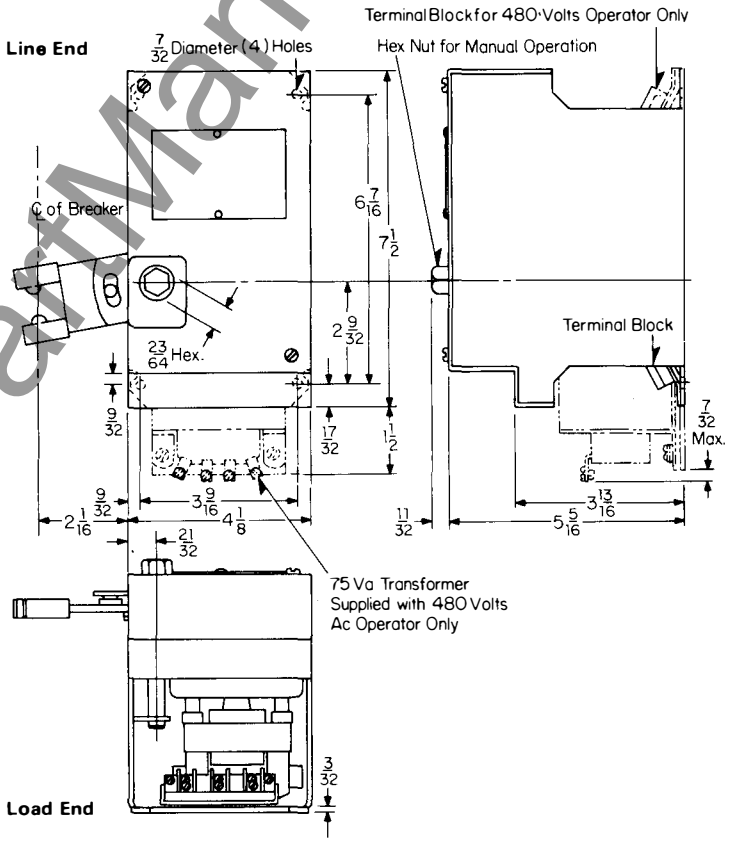

Reproduced From Drawing 1250C27

www.ElectricalPartManuals.com

Motor Operators for LAB, LA and LC Breakers

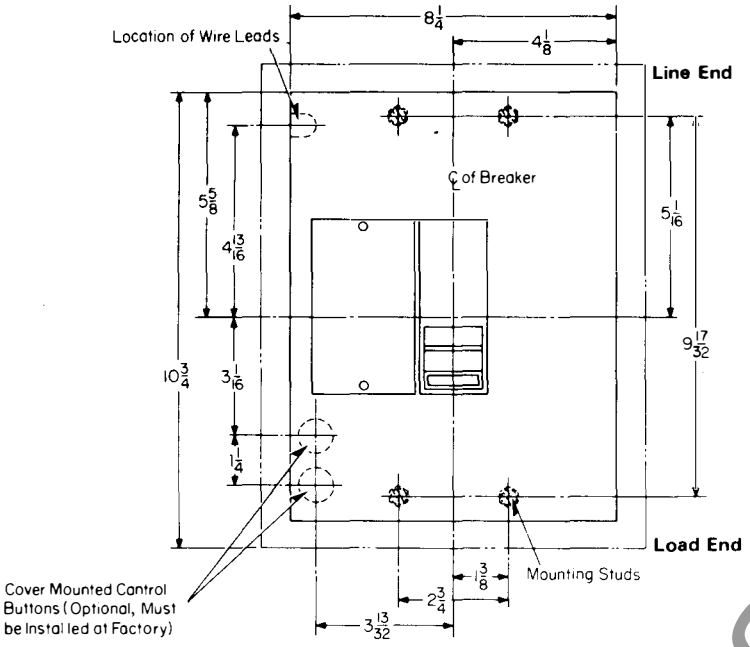

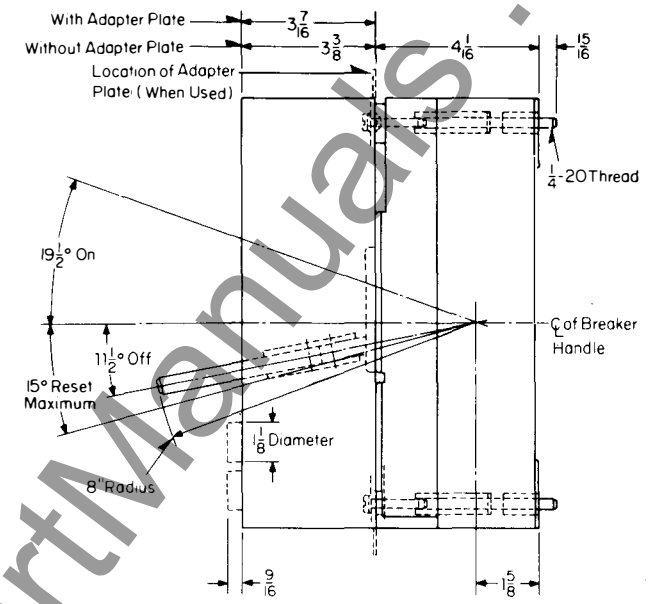

Drilling Plan and Cutout (Adapter Plate)

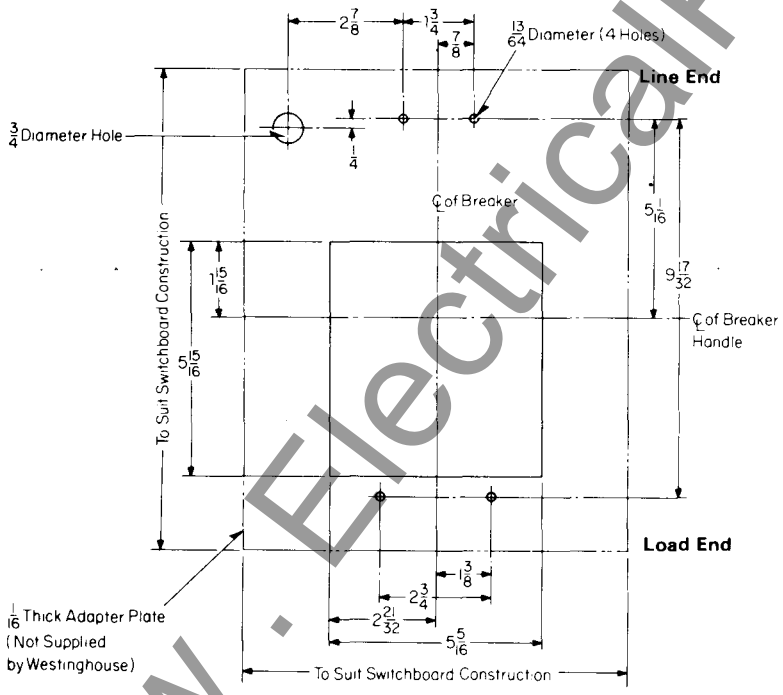

Reproduced From Drawing 5669D04

Printed in U.S.A.

www.ElectricalPartManuals.com

October, 1977
Supersedes Dimension Sheet 29-170
all previous issues.
Mailed to: E, D, C/1901, 1928, 1929/PL

Motor Operators for Types MA, HMA, NB, HNB, and SELTRONIC Type MC, HMC, NC, HNC Circuit Breakers

Page 55: For Types MA, HMA, MC, HMC
Page 56: For Types NB, HNB, NC, HNC

AB DE-ION® Circuit Breakers

Motor Operator for MA, HMA, MC, HMC Breakers

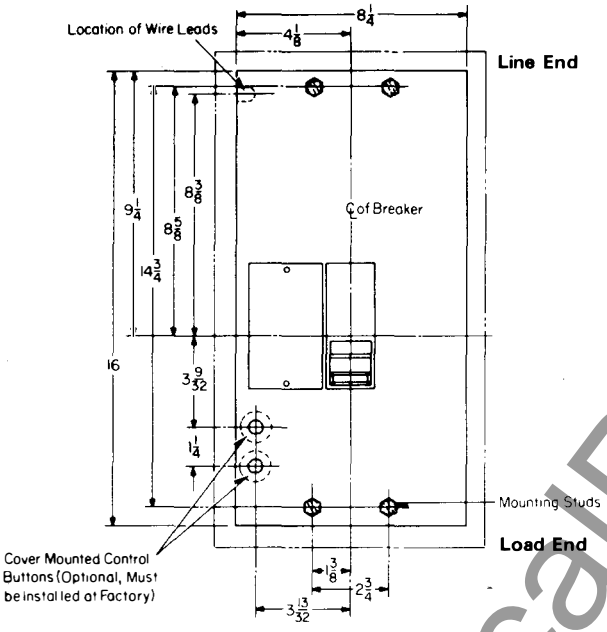

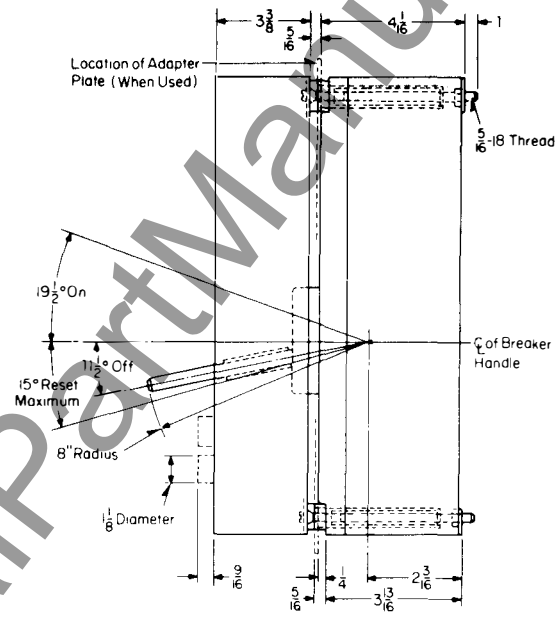

Drilling Plan and Cutout (Adapter Plate)

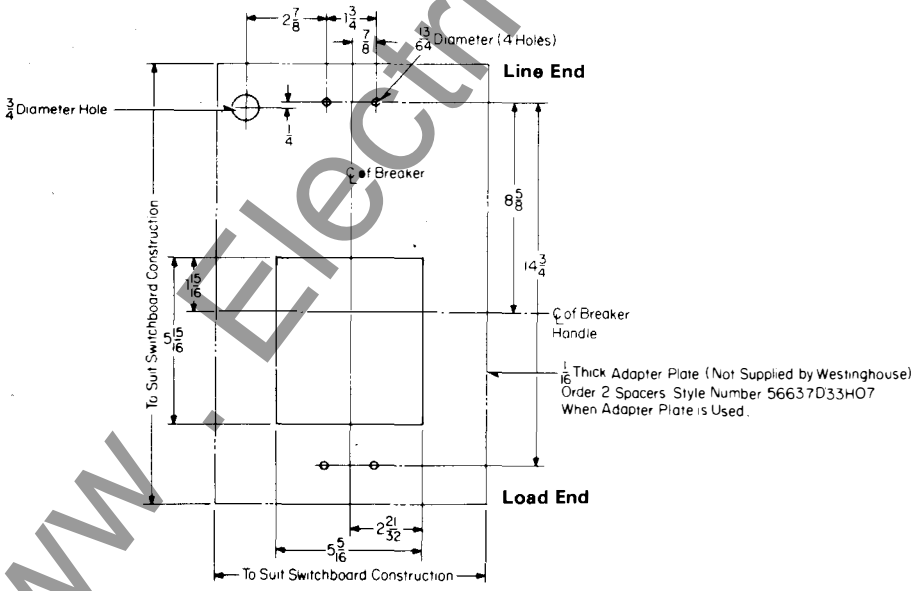

Reproduced From Drawing 5669D03

www.ElectricalPartManuals.com

Motor Operator for NB, HNB, NC, HNC Breakers

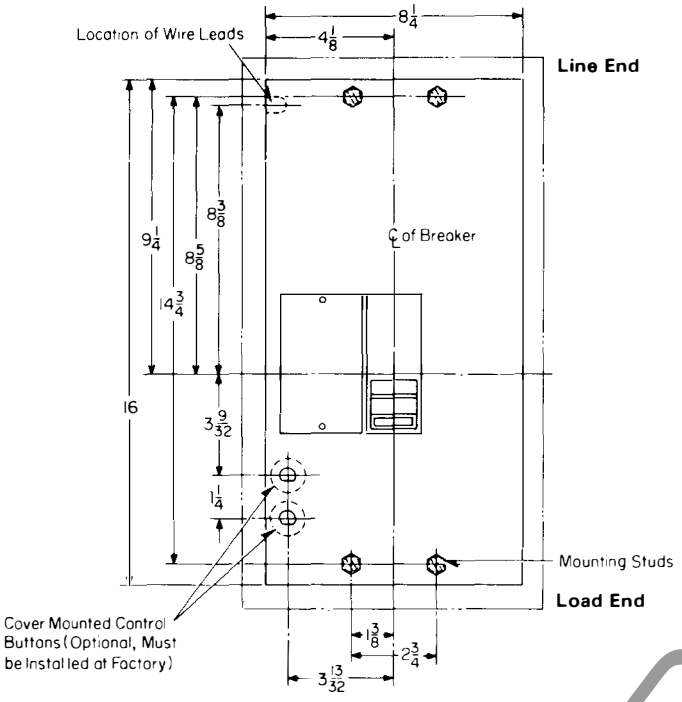

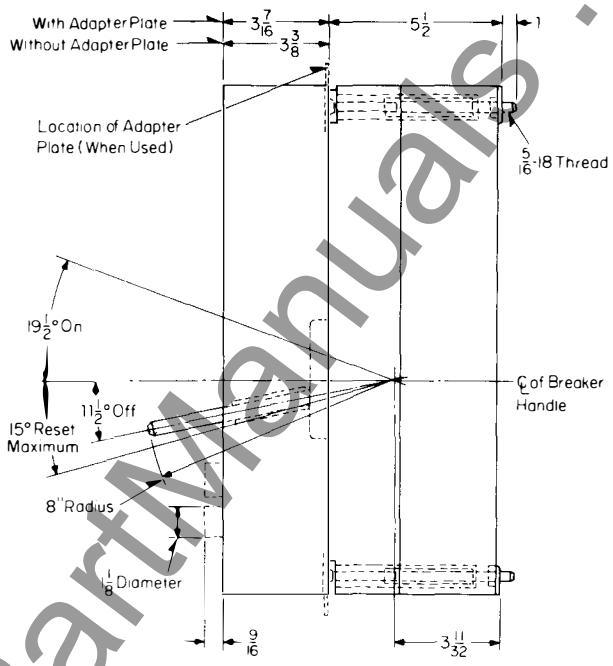

Drilling Plan and Cutout (Adapter Plate)

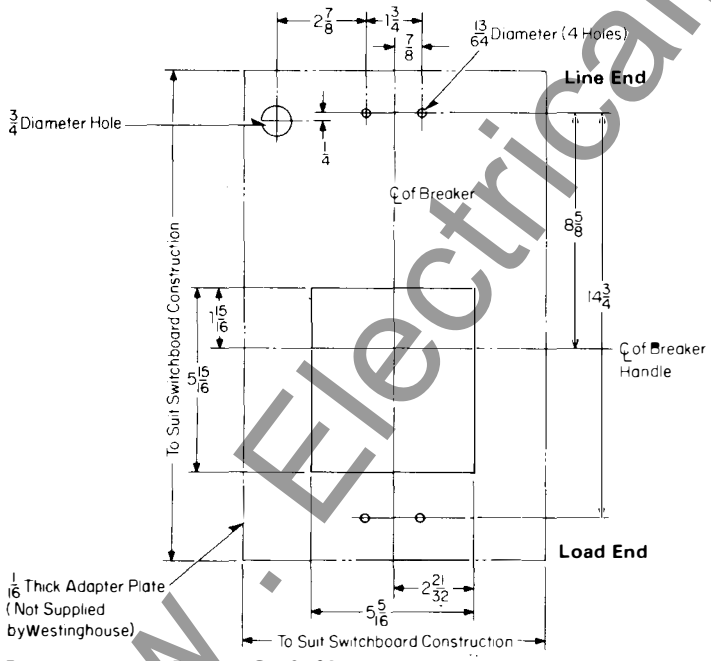

Reproduced From Drawing 5669D02

Printed in U.S.A.

www.ElectricalPartManuals.com

October, 1977
Supersedes Dimension Sheet 29-170
all previous issues.
Mailed to: E, D, C/1901, 1928, 1929/PL

Motor Operators for Types PB and
LA TRI-PAC® Circuit Breakers

Page 57: For Type PB
Page 58: For Type LA TRI-PAC

AB DE-ION® Circuit Breakers

Motor Operator for Type PB Breaker

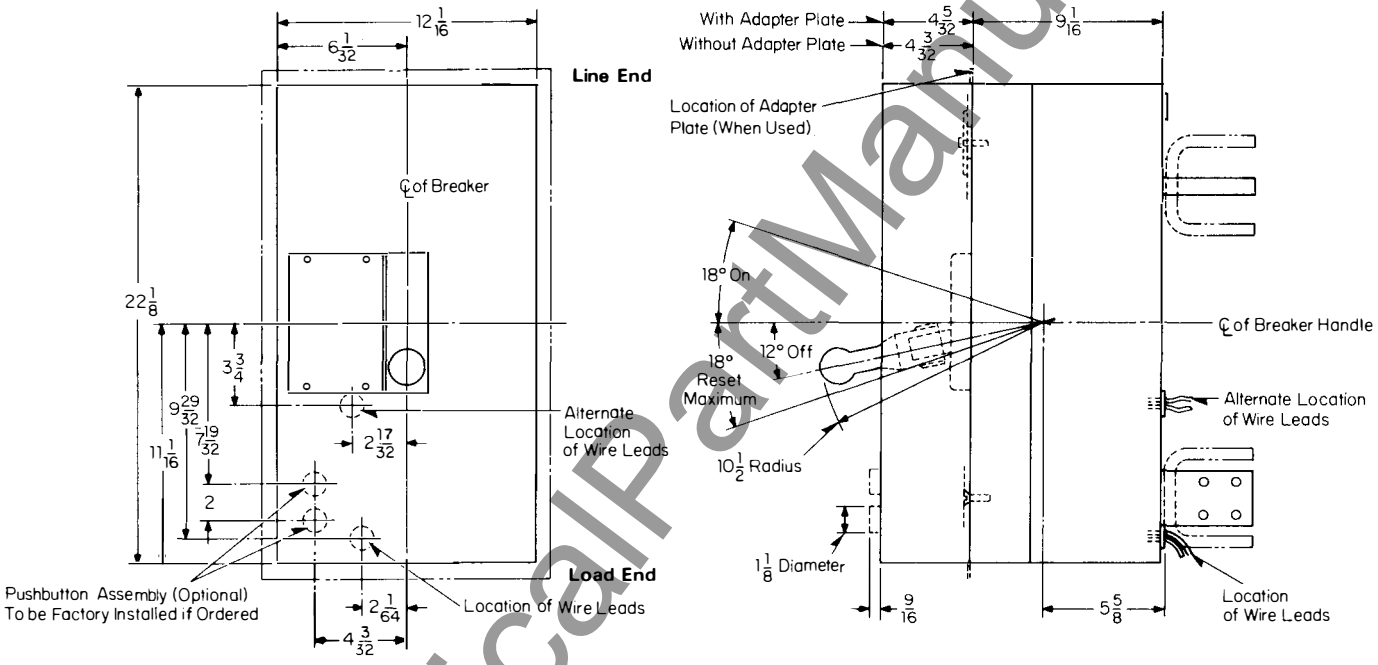

Drilling Plan and Cutout

Adapter Plate

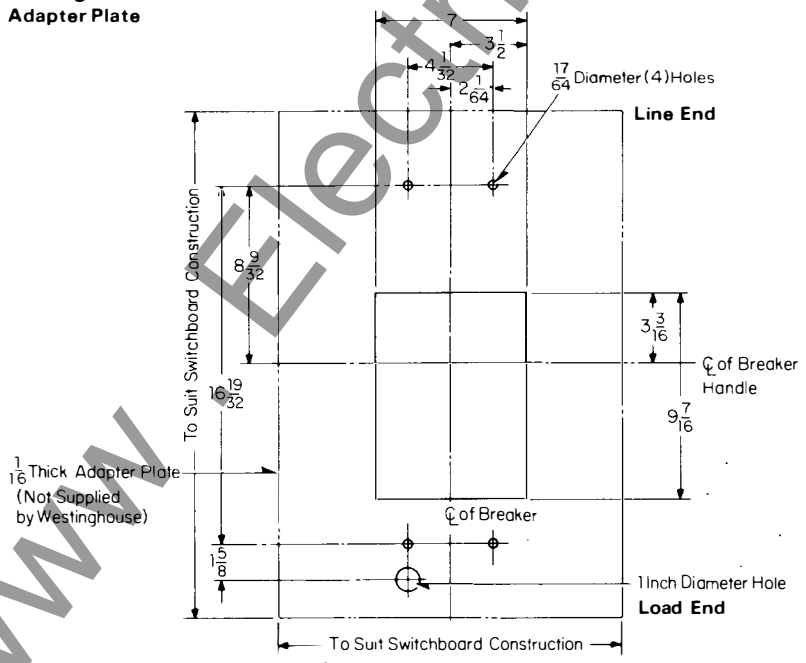

Reproduced From Drawing 5669D01

www.ElectricalPartManuals.com

Motor Operator for Type LA TRI-PAC® Breaker

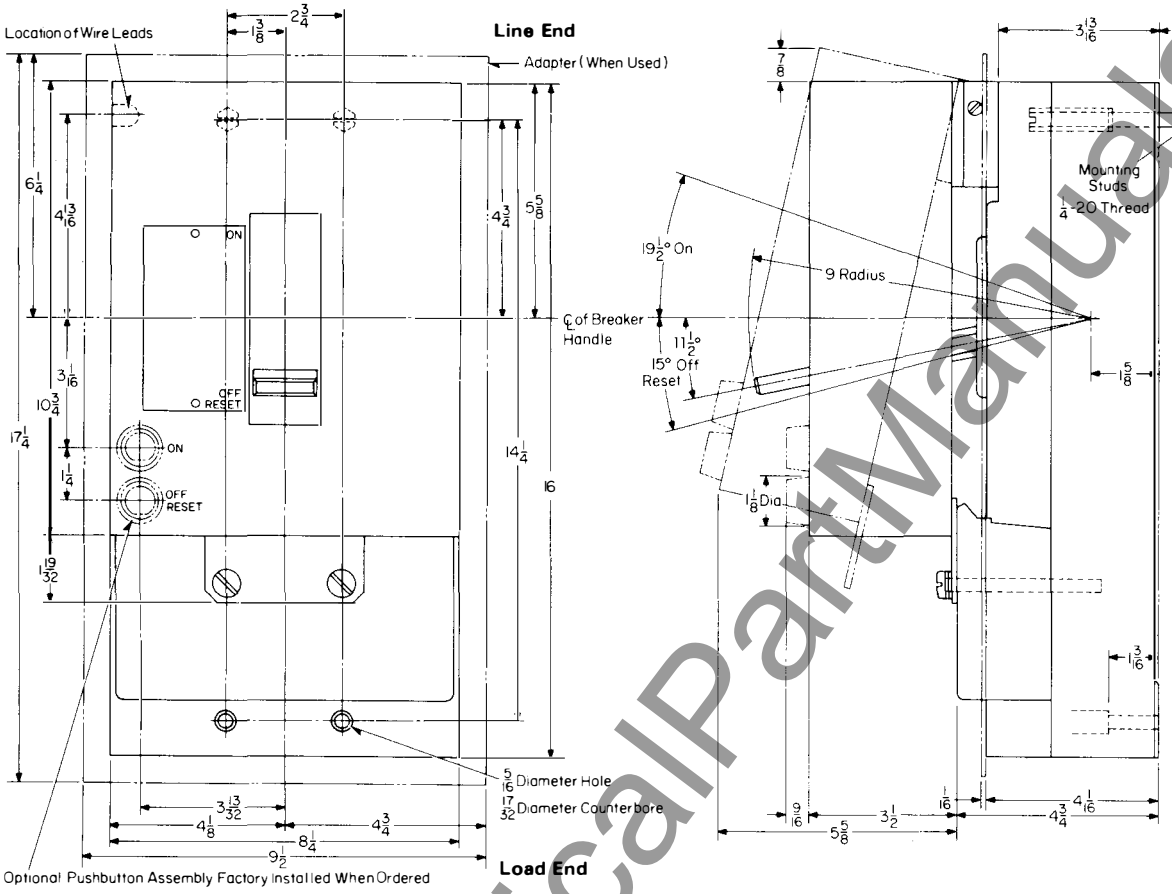

Switchboard Cutout For Motor Operator

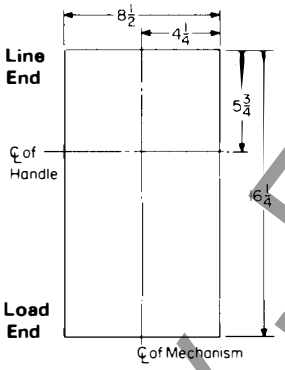

Transformer 480/120 Volts
(Supplied for Separate Mounting by Customer for 480 Volt Operators)

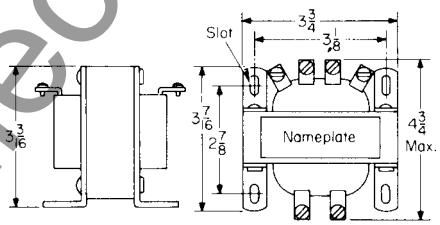

Reproduced From Drawing 5677D75

Westinghouse Electric Corporation
Low Voltage Breaker Division
Beaver, Pennsylvania 15009

Printed in U.S.A.

www.ElectricalPartManuals.com

October, 1977
Supersedes Dimension Sheet 29-170
all previous issues.
Mailed to: E, D, C/1901, 1928, 1929/PL

Motor Operator for NB TRI-PAC® Circuit Breakers and Draw-out Frame for LA, HLA, LC, HLC 600 Ampere Circuit Breakers

Page 59: Motor Operator for NB TRI-PAC Breaker
Page 60: Drawout Frame for LA, HLA, LC, HLC 600 Ampere Breakers

AB DE-ION® Circuit Breakers

Motor Operator for Type NB TRI-PAC Breaker

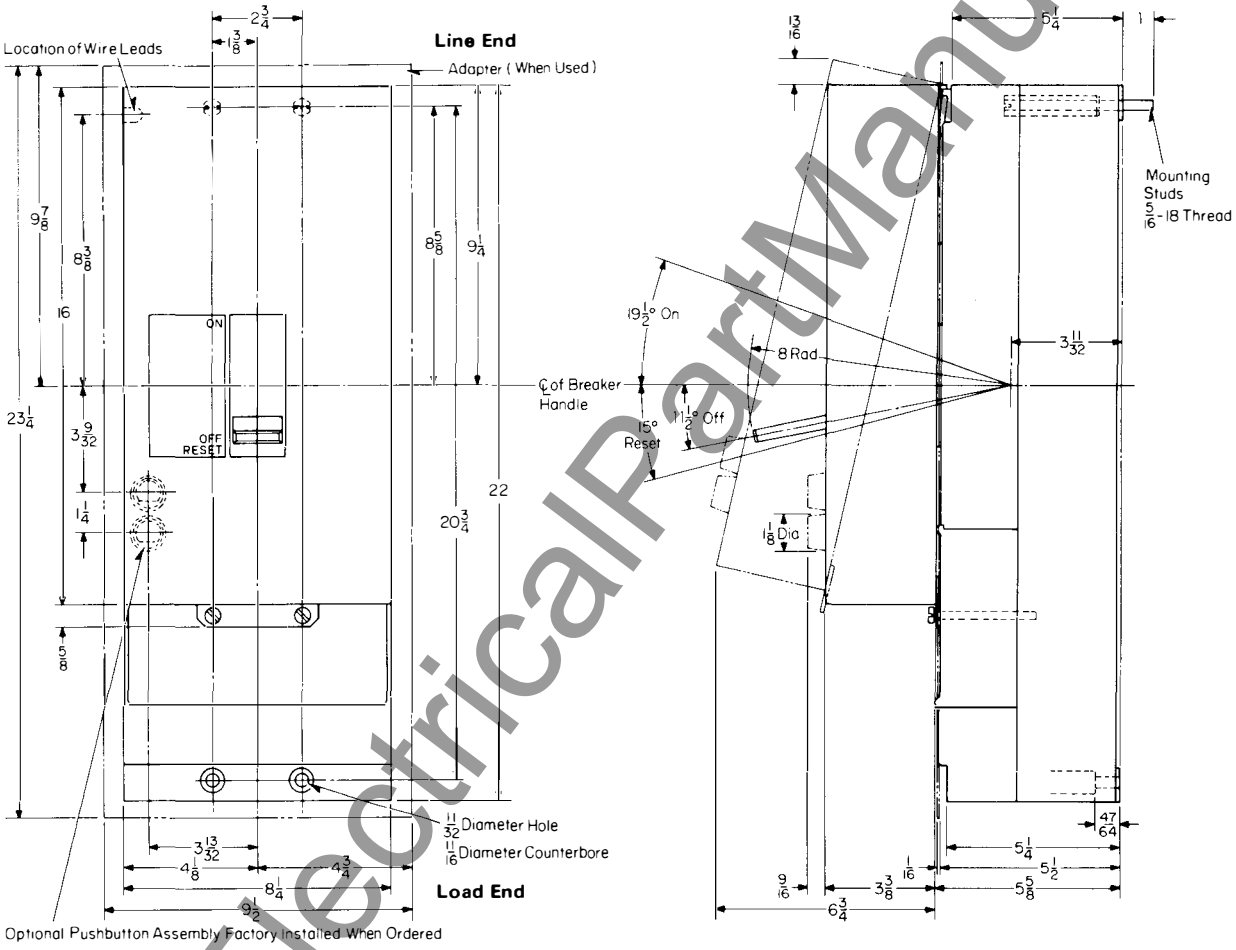

Switchboard Cutout For Motor Operator

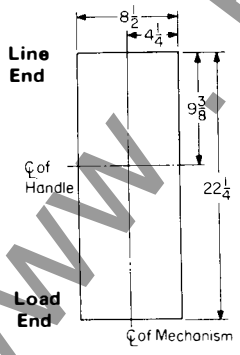

Transformer 480/120 Volts

(Supplied for Separate Mounting by Customer for 480 Volt Operators)

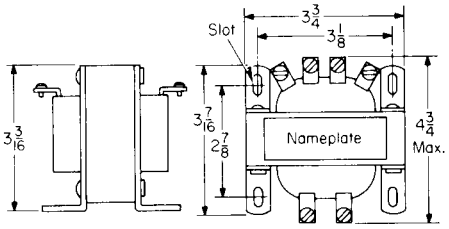

Reproduced From Drawing 5677D76

www.ElectricalPartManuals.com

Drawout Frame for Type LA, HLA, LC, HLC 600 Ampere Breakers

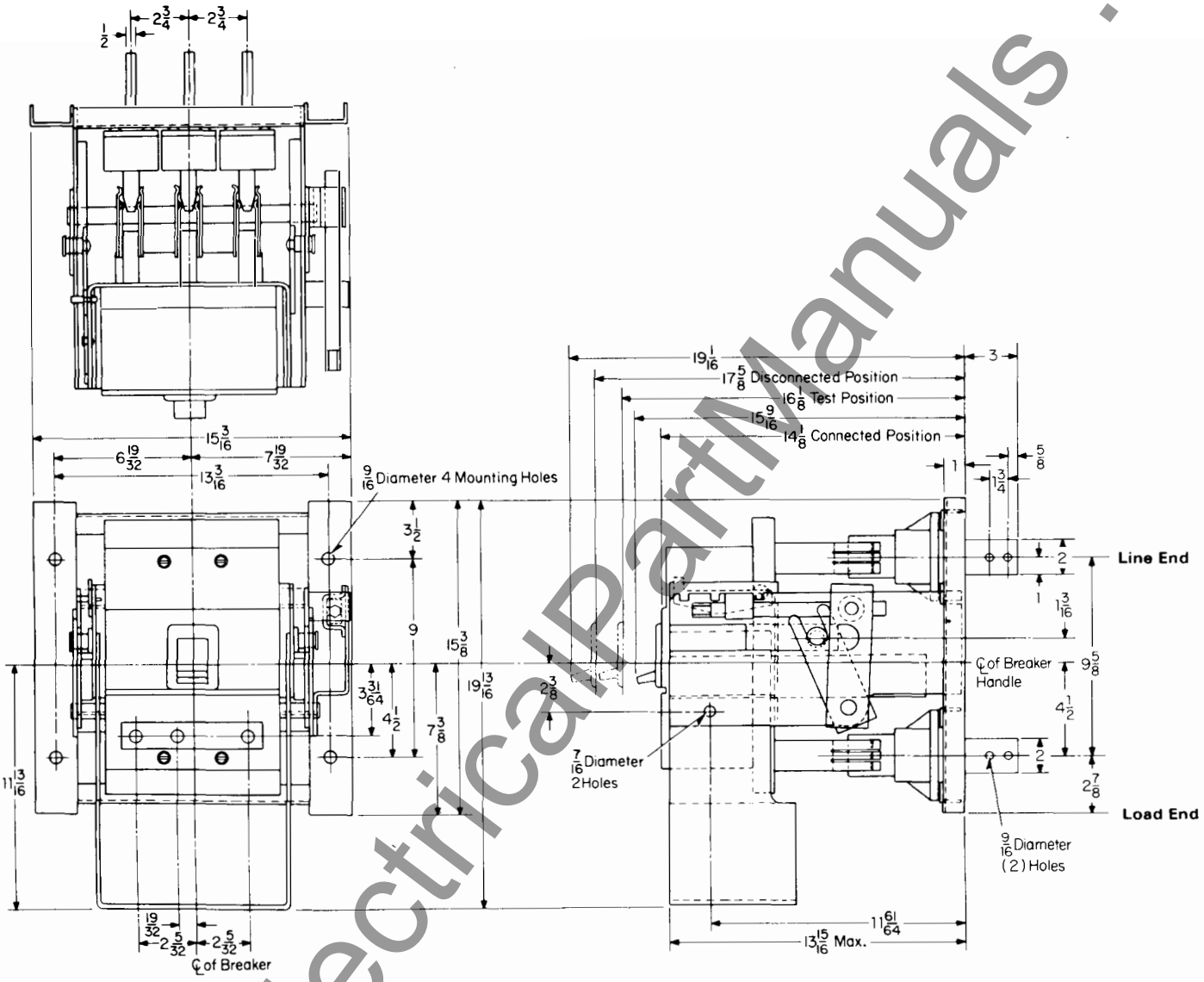

Front Cover Cutout

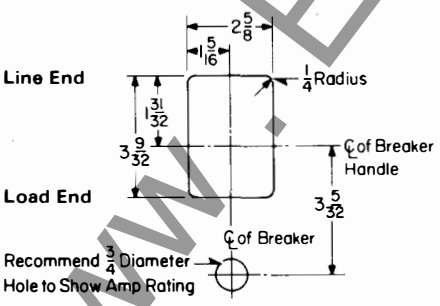

Reproduced From Drawing 5677D80

Printed in U.S.A.

www.ElectricalPartManuals.com

October, 1977
Supersedes Dimension Sheet 29-170
all previous issues.
Mailed to: E, D, C/1901, 1928, 1929/PL

Drawout Frames for MA, HMA, NB, HNB, and Types MC, HMC, NC, HNC SELTRONIC™ Circuit Breakers

Page 61: For MA, HMA, MC, MCG, HMC, HMCG
Page 62: For NB, HNB, NC, NCG, HNC, HNCG

AB DE-ION® Circuit Breakers

Drawout Frame for Type MA, HMA, MC, MCG, HMC, HMCG Breakers

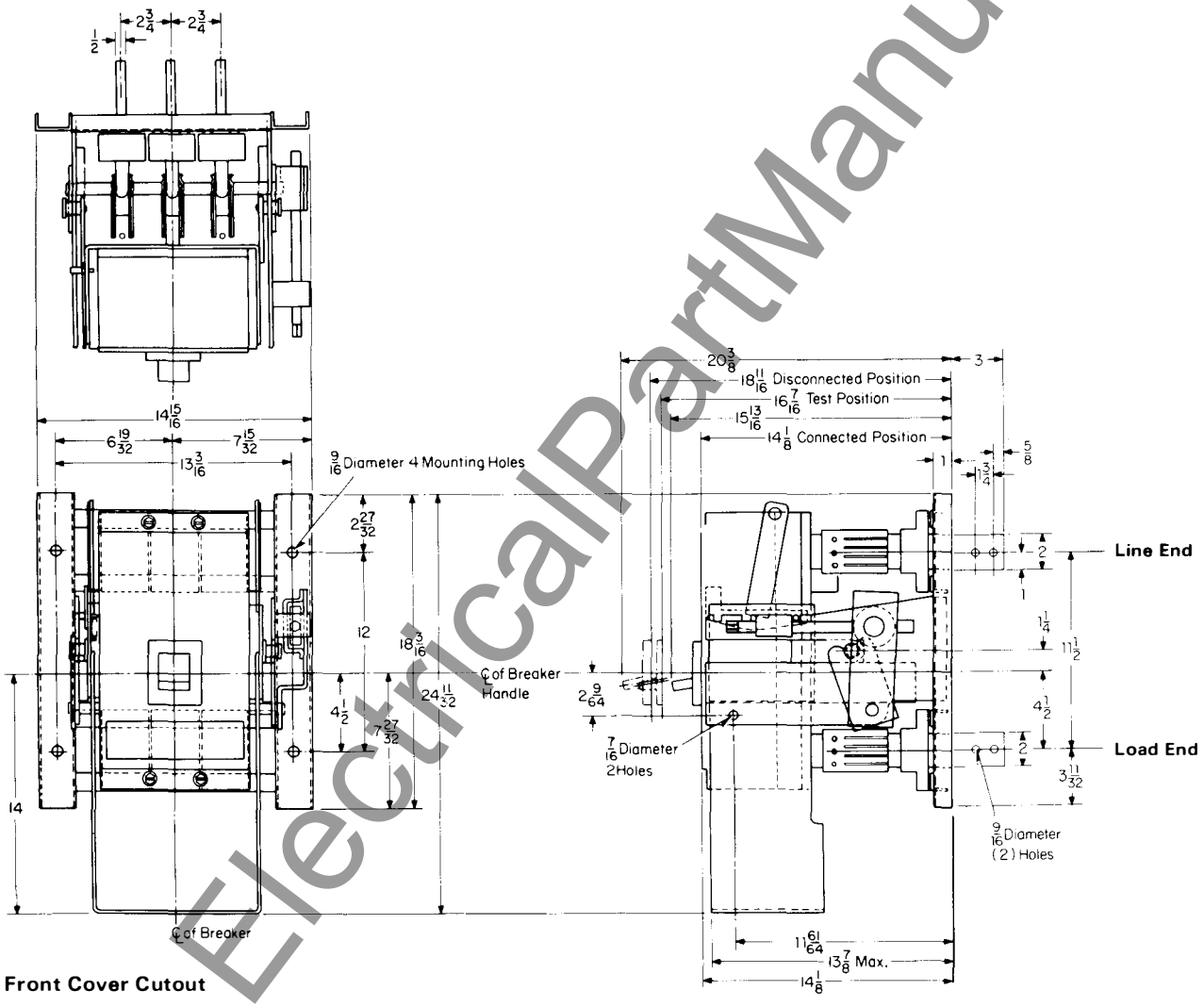

Front Cover Cutout

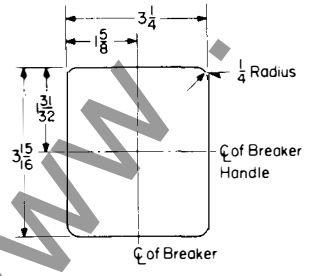

Reproduced From Drawing 5682D16

www.ElectricalPartManuals.com

Drawout Frame for Type NB, HNB, NC, NCG, HNC, HNCG Breakers

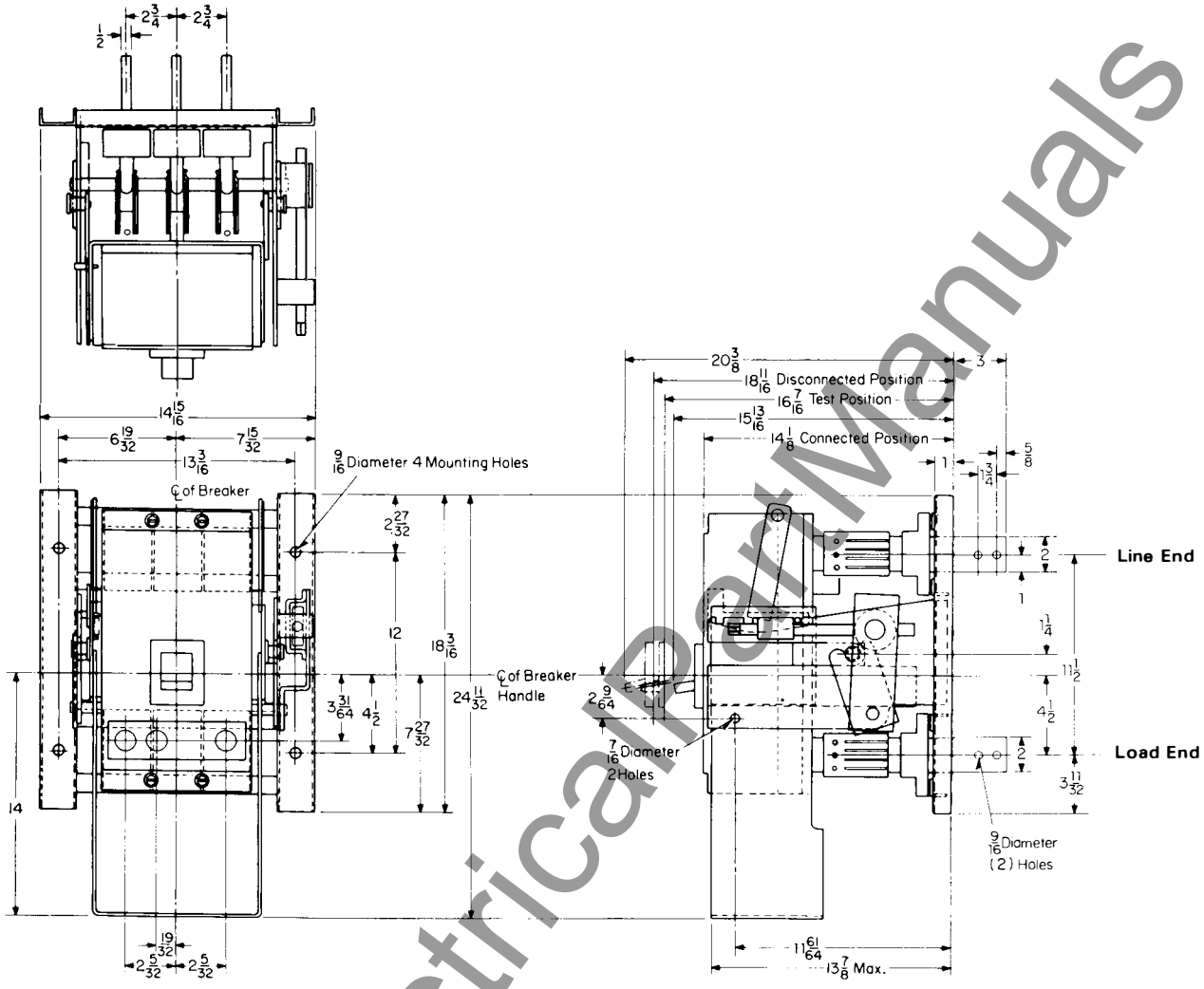

Front Cover Cutout

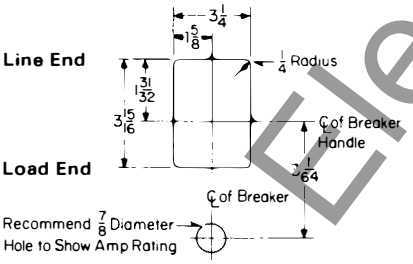

Reproduced From Drawing 5677D81

Westinghouse Electric Corporation
Low Voltage Breaker Division
Beaver, Pennsylvania 15009

Printed in U.S.A.

www.ElectricalPartManuals.com

October, 1977
Supersedes Dimension Sheet 29-170
all previous issues.
Mailed to: E, D, C/1901, 1928, 1929/PL

Drawout Frames for Types PCC, PCCG
SELTRONIC™ Circuit Breakers and Type NB
TRI-PAC® 800 Amp

Page 63: For Types PC, PCCG
Page 64: For NB TRI-PAC 800 Amp

AB DE-ION® Circuit Breakers

Drawout Frame for Type PC, PCCG Breakers

2500 and 3000 Amp Bus Arrangement

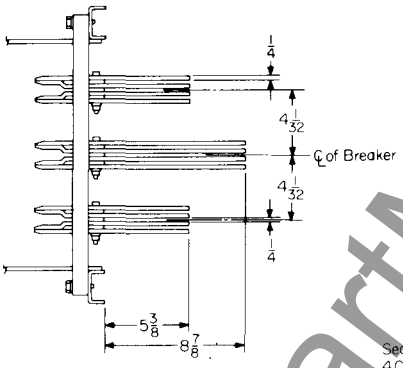

2000 Amp Bus Arrangement

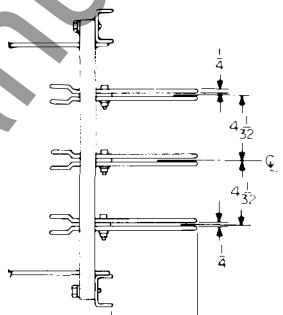

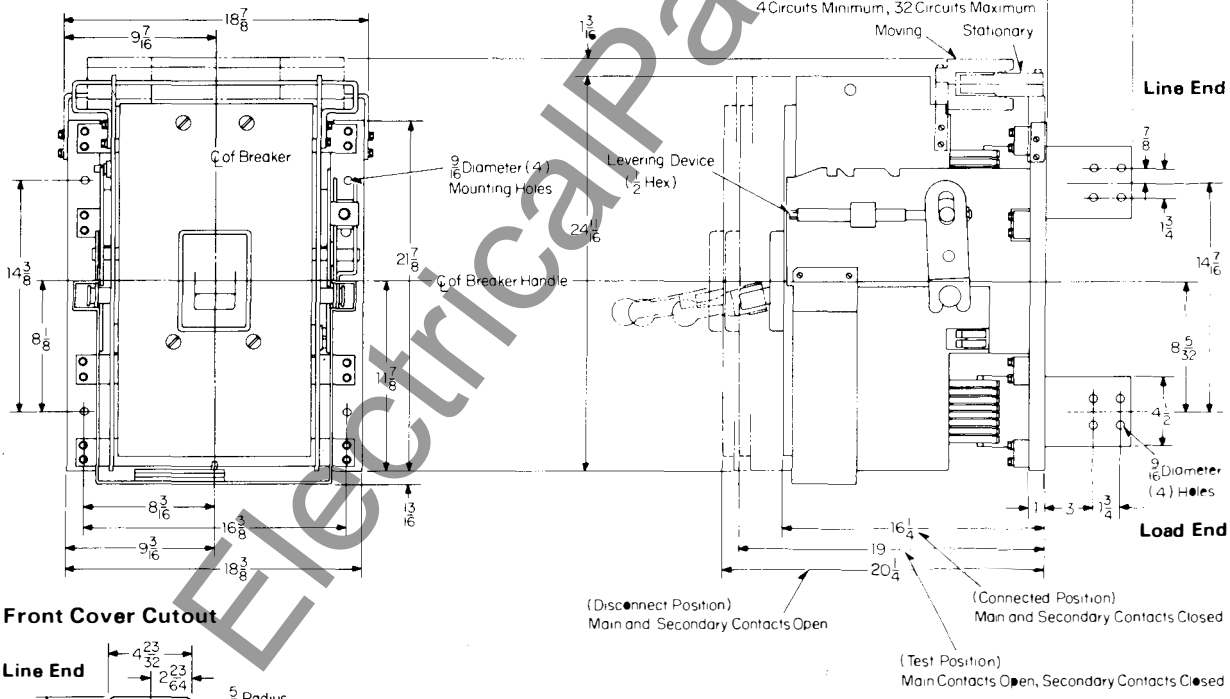

Front Cover Cutout

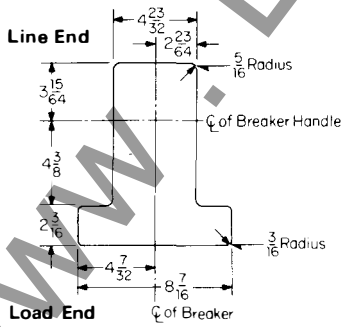

Reproduced From Drawing 2601 D80

www.ElectricalPartManuals.com

Drawout Frame for Type NB TRI-PAC® 800 Ampere Frame

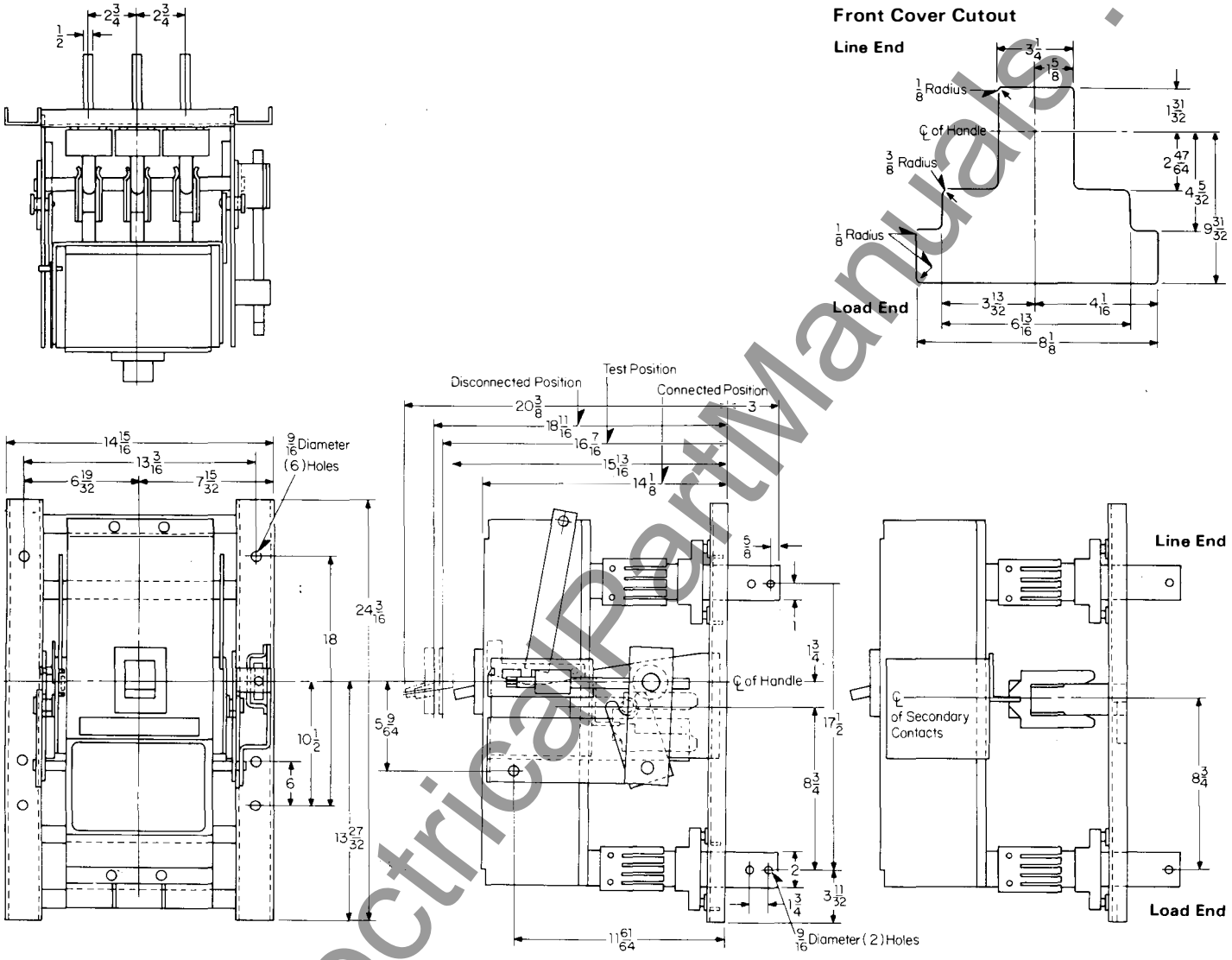

Reproduced From Drawing 2603D31

Westinghouse Electric Corporation
Low Voltage Breaker Division
Beaver, Pennsylvania 15009

Printed in U.S.A.

www.ElectricalPartManuals.com

AB De-ion® circuit breakers

dimension sheet **29-170**

index

page 1

index of loose leaf dimension sheets

description	page numbers
standard circuit breakers	
70 ampere breakers	
Quicklag P	3, 4
Quicklag C	5,6
100 ampere breakers	
type E offcenter and centerline	7, 8
type EH	9
type F	11
type G	13
225 ampere breakers	
type J	15, 16
type JK	17, 18
type K	19, 20
400 ampere breakers	
type JKL	17, 18
type KL	21, 22
800 ampere breakers	
type LM	23, 24
high interrupting capacity breakers	
MARK 75*	
100 ampere HF	25
225 ampere HK	27, 28
400 ampere HKL	29, 30
800 ampere HLM	31, 32
TRI-PAC®	
100 ampere TRI-PAC	33
225 ampere TRI-PAC	34
400 ampere TRI-PAC	35
600 ampere TRI-PAC	36
Visi-Flex switches	37-40
De-ion switches	41, 42

October, 1959
supersedes dimension sheet 29-170, pages 1 and 2, dated January, 1956
mailed to: E/243/DS; D63-2C; C25-2Y

Westinghouse Electric Corporation
Standard Control Division: Beaver Plant • Beaver, Pa.
printed in U.S.A.

www . ElectricalPartManuals . com

www . ElectricalPartManuals . com

Quicklag C 70 ampere
AB De-ion circuit breakers

1-pole

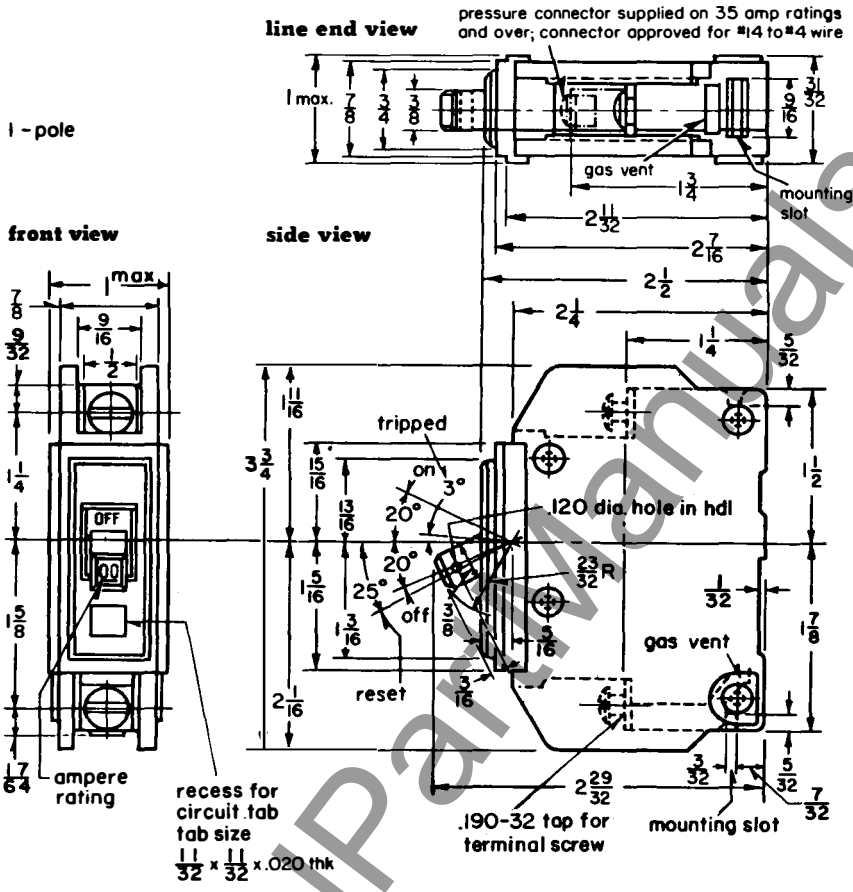

surface mounting plate

style no. 1614256

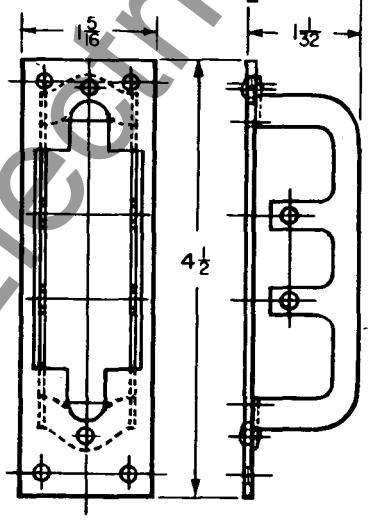

reproduced from drawing 133-A-059

October, 1959
supersedes dimension sheet 29-170, pages 3 and 4, dated April, 1958
mailed to: E/243/DS; D63-2C; C25-2Y

www . ElectricalPartManuals . com

Quicklag C 70 ampere

AB De-ion circuit breakers

2 and 3-pole

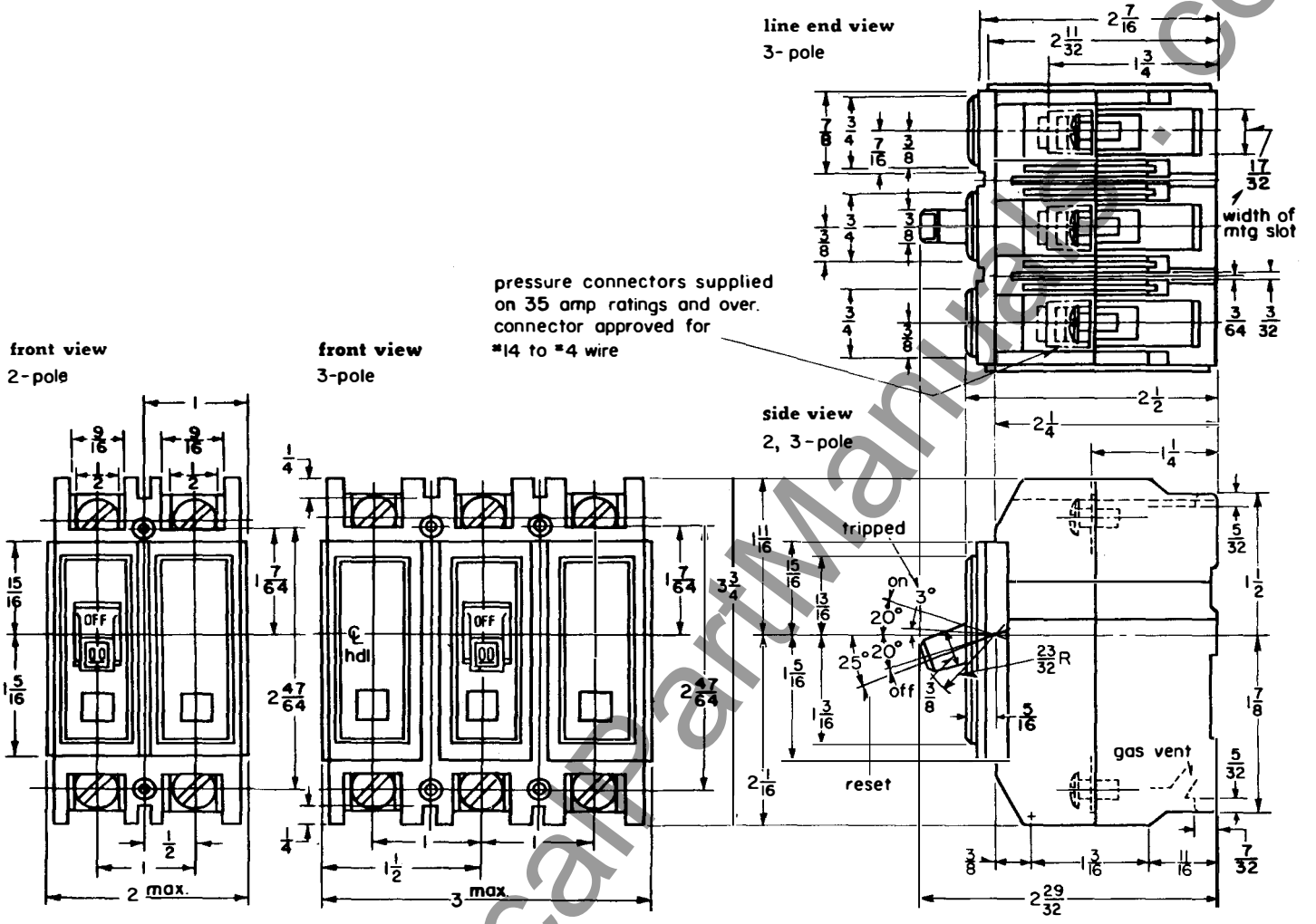

surface mounting insert

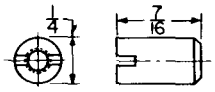

2 p - style no. 133A744G02
3 p - style no. 133A744G01

mounting plate

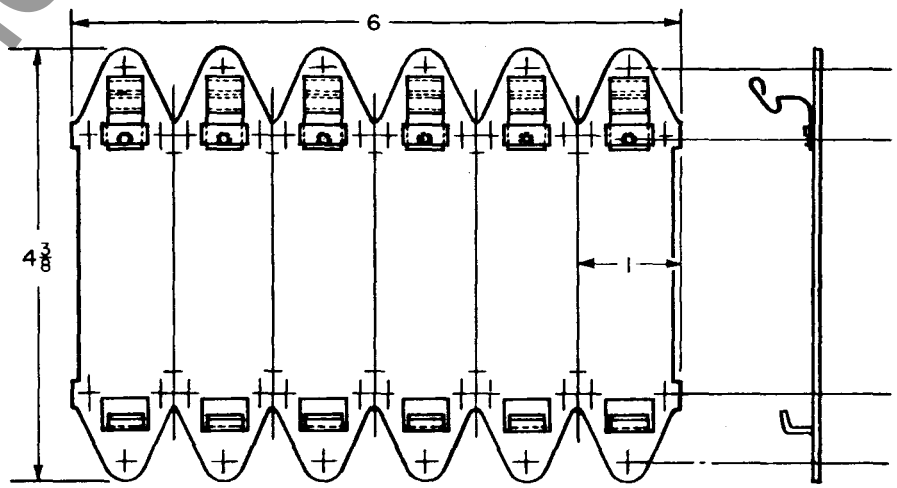

mounting plate style no. 207B513G01 maximum of six 1-poles, three 2-poles, or two 3-poles. plates may be separated when necessary

reproduced from drawings 30-D-9260, 313-C-777

Westinghouse Electric Corporation
Standard Control Division: Beaver Plant • Beaver, Pa.
printed in U.S.A.

www.ElectricalPartManuals.com

type JK 225 ampere
type JKL 400 ampere

AB De-ion circuit breakers
2 and 3-pole

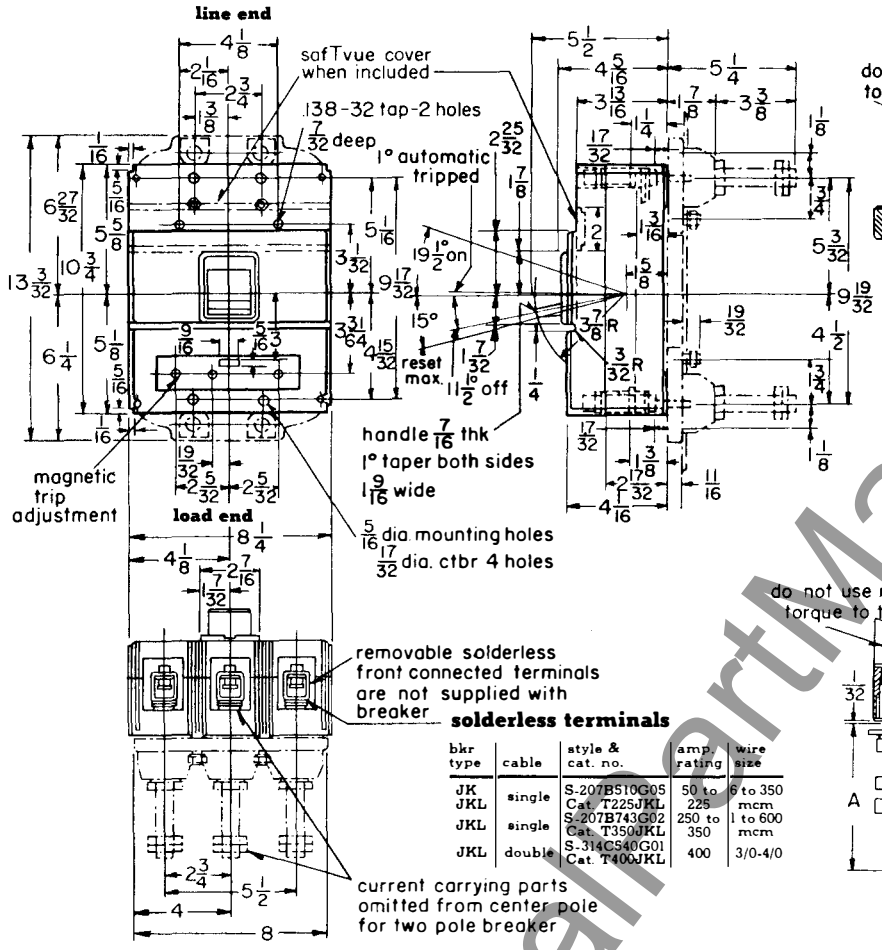

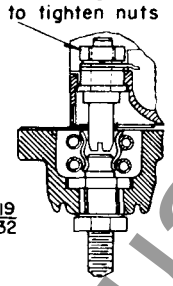

drawout stud

breaker type	poles	amp. rating	kit style no.	thd. size
JK	2	50 to 225	313C644G23	1/2-13
JK	3	50 to 225	313C644G24	1/2-13
JKL	2	50 to 400	313C644G25	3/4-16
JKL	3	50 to 400	313C644G26	3/4-16

1 kit required per breaker, not supplied with breaker

solderless terminals

bkr type	cable	style & cat. no.	amp. rating	wire size
JK JKL	single	S-207B510G05 Cat. T225JKL	50 to 225	6 to 350 mcm
JKL	single	S-207B743G02 Cat. T350JKL	250 to 350	1 to 600 mcm
JKL	double	S-314C540G01 Cat. T400JKL	400	3/0-4/0

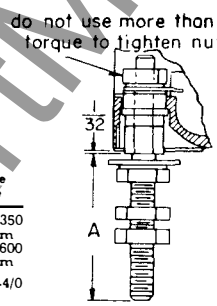

rear connected studs

breaker type	amp. rating	style no.	thd. size	dim. A
JK	50 to 225	1241345	1/2-13	3-3/16
JK	50 to 225	1241392	1/2-13	4-13/16
JK	50 to 225	1241346	1/2-13	6-1/16
JKL	50 to 400	05B7383G15	3/4-16	5-11/32
JKL	50 to 400	05B7383G16	3/4-16	7-11/32
JKL	50 to 400	05B7383G17	3/4-16	10-11/32

2 req. per pole, not supplied with breaker

front cover cutout

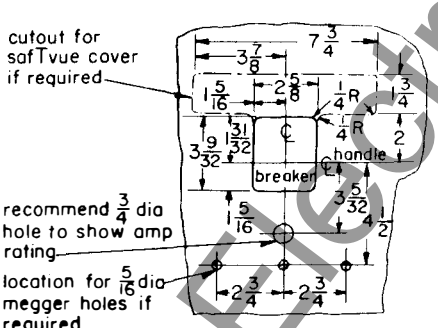

drilling plans

for mounting panel drawout studs

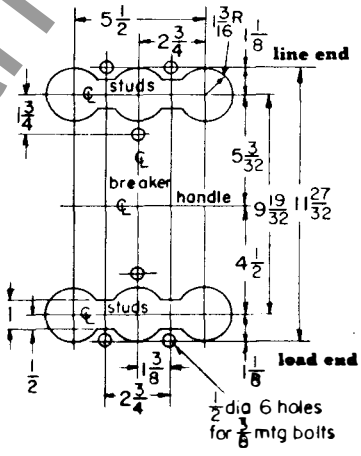

for rear connected studs

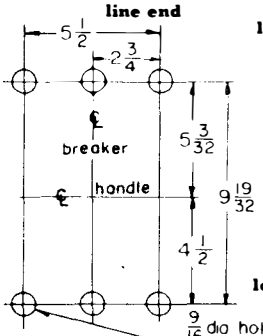

for mtg. bolts front connected terminals

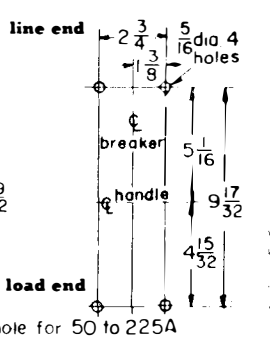

9/16 dia hole for 50 to 225A
13/16 dia hole for 250 to 400A
6 holes for 3 pole bkr.
4 holes for 2 pole bkr
omit 2 center holes for 2 pole bkr.

reproduced from drawing 455-D-789

October, 1959
supersedes dimension sheet 29-170, page 12.1, dated June, 1959
mailed to: E/243/DS; D63-2C; C25-2Y

www.ElectricalPartManuals.com

type JK 225 ampere
type JKL 400 ampere

AB De-ion circuit breakers motor operated 2 and 3-pole

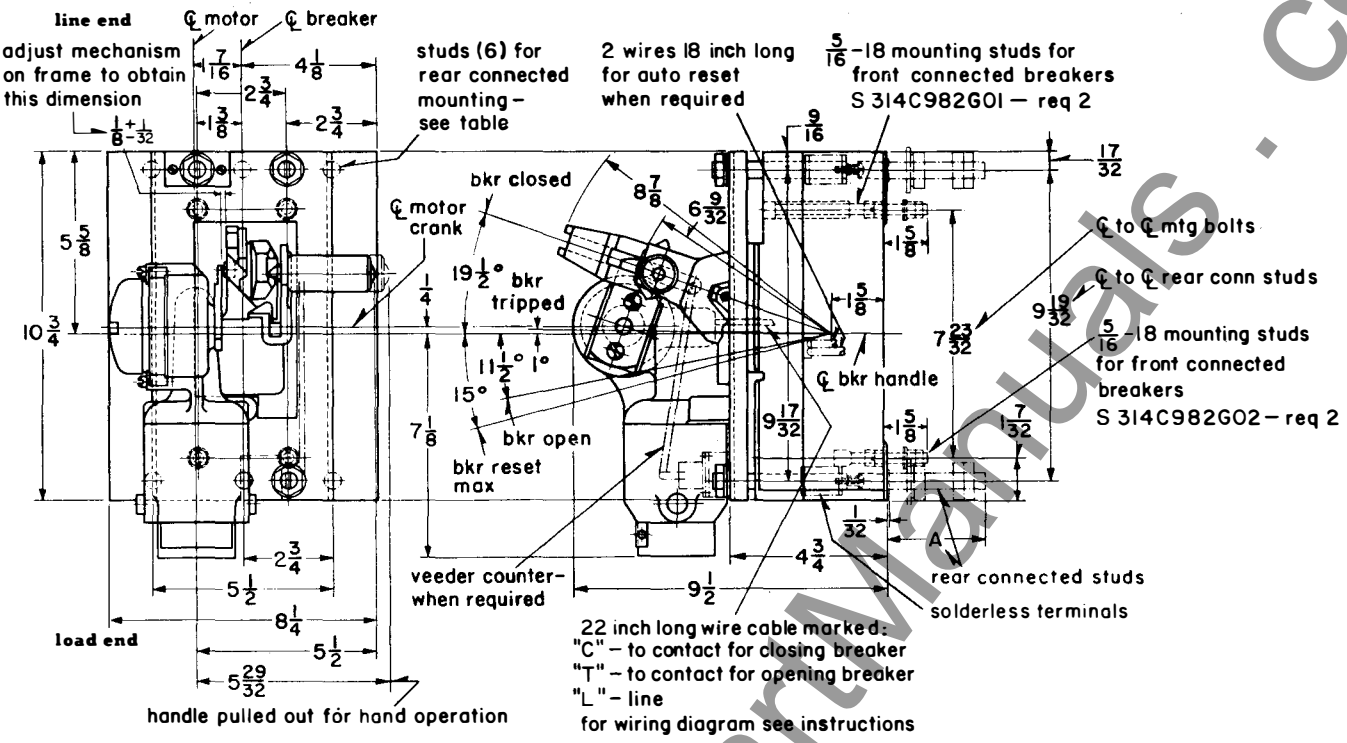

solderless terminals

breaker type	cable	style & catalog no.	amp. rating	wire size
JK JKL	single	S #207B510G05 Cat. T225JKL	50 to 225	6 to 350MCM
JKL	single	S #207B743G02 Cat. T350JKL	250 to 350	1 to 600MCM
JKL	double	S #314C540G01 Cat. T400JKL	400	3/0 to 4/0

rear connected stud information

breaker type	amp. rating	style number	thd. size	dim. A
JK	50 to 225	1241 345	1/2-13	3 7/32
JK	50 to 225	1241 392	1/2-13	4 31/32
JK	50 to 225	1241 346	1/2-13	6 9/32
JKL	50 to 400	05B7 383G15	3/4-16	5 1/2
JKL	50 to 400	05B7 383G16	3/4-16	8
JKL	50 to 400	05B7 383G17	3/4-16	10 1/2

drilling plans (front view)

front cover cutout ▲

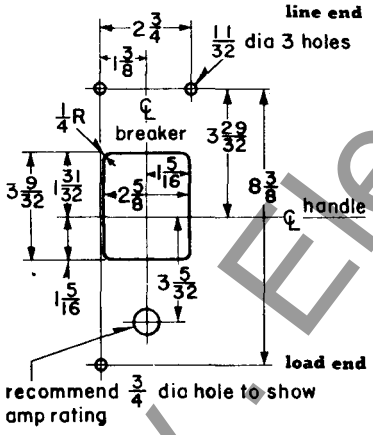

for rear connected studs

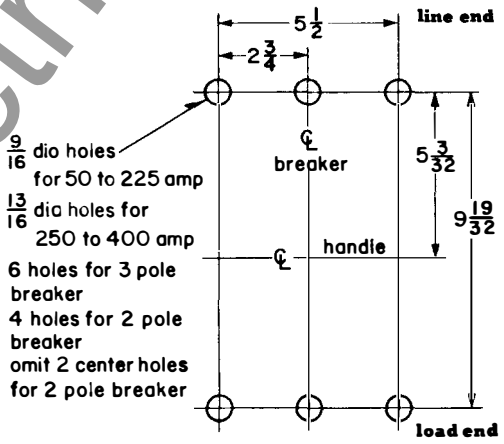

for front mounting bolts

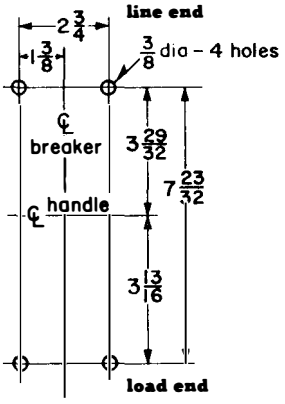

▲ for front panel (switchboard) mounting — using 5/16 -18 x 4 3/4 mounting screws S 314C982G03 — req 1

reproduced from drawing 314-C-985

Westinghouse Electric Corporation
Standard Control Division: Beaver Plant • Beaver, Pa.
printed in U.S.A.

www.ElectricalPartManuals.com

type LA 400 ampere
AB De-ion circuit breakers

2 and 3-pole

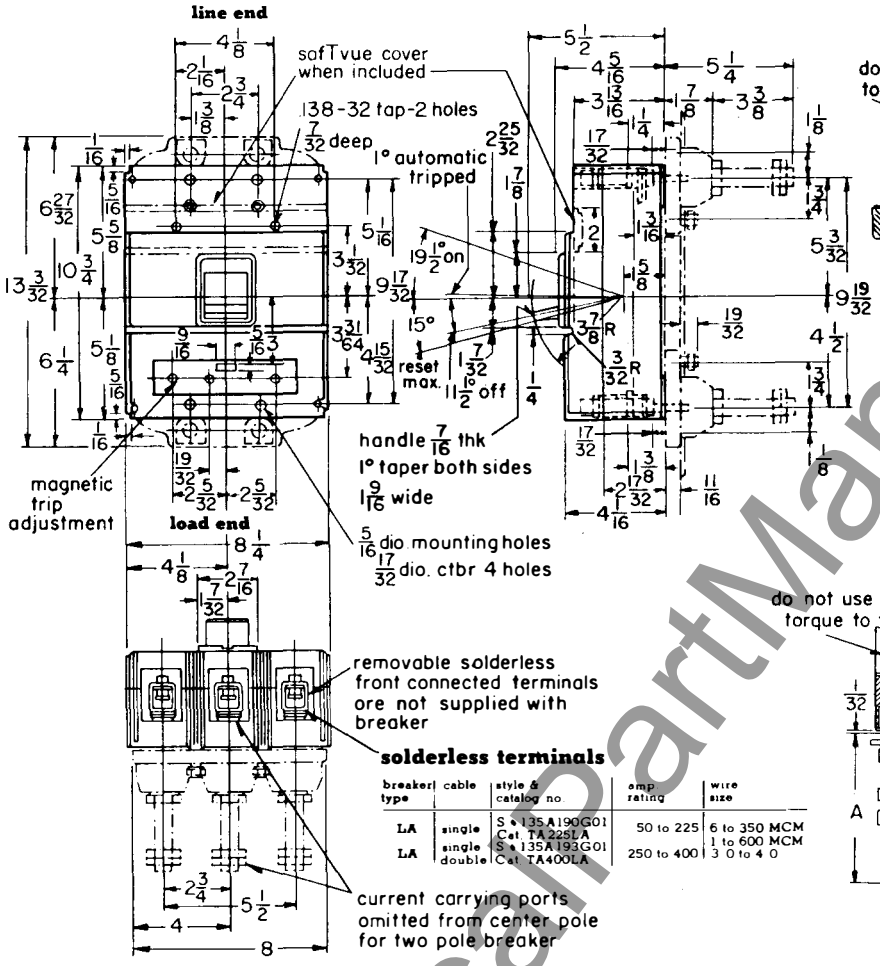

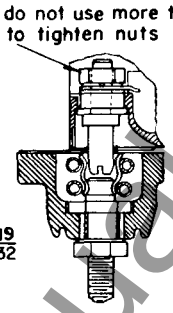

drawout stud

breaker type	poles	amp rating	kit style no.	thd. size
LA	2	50 to 400	313C644G25	3/4 — 16
LA	3	50 to 400	313C644G26	3/4 — 16

1 kit required per breaker, not supplied with breaker

solderless terminals

breaker type	cable	style & catalog no.	amp rating	wire size
LA	single	S • 135A190G01 Cat. TA225LA	50 to 225	6 to 350 MCM
LA	single double	S • 135A193G01 Cat. TA400LA	250 to 400	1 to 600 MCM 3 0 to 4 0

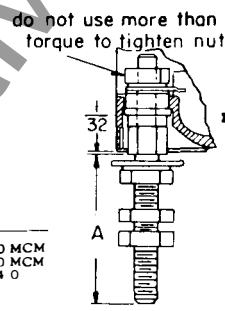

rear connected studs

breaker type	amp rating	style no.	thd size	dim A
LA	50 to 400	05B7383G15	3/4 — 16	5 — 13/32
LA	50 to 400	05B7383G16	3/4 — 16	7 — 31/32
LA	50 to 400	05B7383G17	3/4 — 16	10 — 13/32

2 req. per pole, not supplied with breaker

front cover cutout

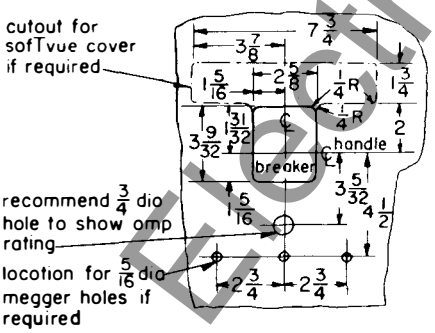

drilling plans

for mounting panel drawout studs

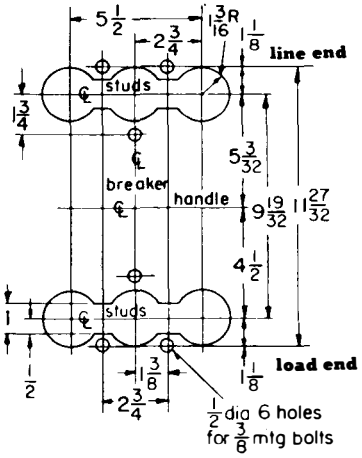

for rear connected studs

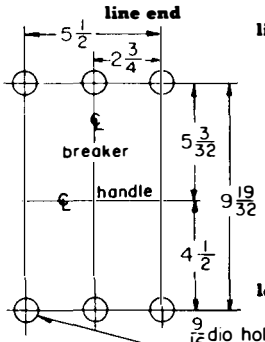

for mtg. bolts front connected terminals

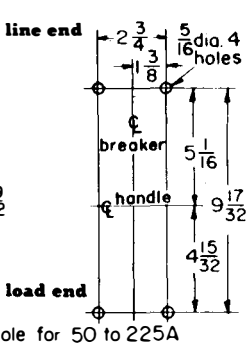

9/16 dia hole for 50 to 225A
13/16 dia hole for 250 to 400A
6 holes for 3 pole bkr.
4 holes for 2 pole bkr.
omit 2 center holes for 2 pole bkr.

reproduced from drawing 455-D-789

June, 1960
supersedes dimension sheet 29-170, pages 17 and 18, dated October, 1959
mailed to: E/243/ DS; D63-2C; C/308/DB; C/312/CB

www.ElectricalPartManuals.com

type LA 400 ampere
AB De-ion circuit breaker

motor operated
2 and 3-pole

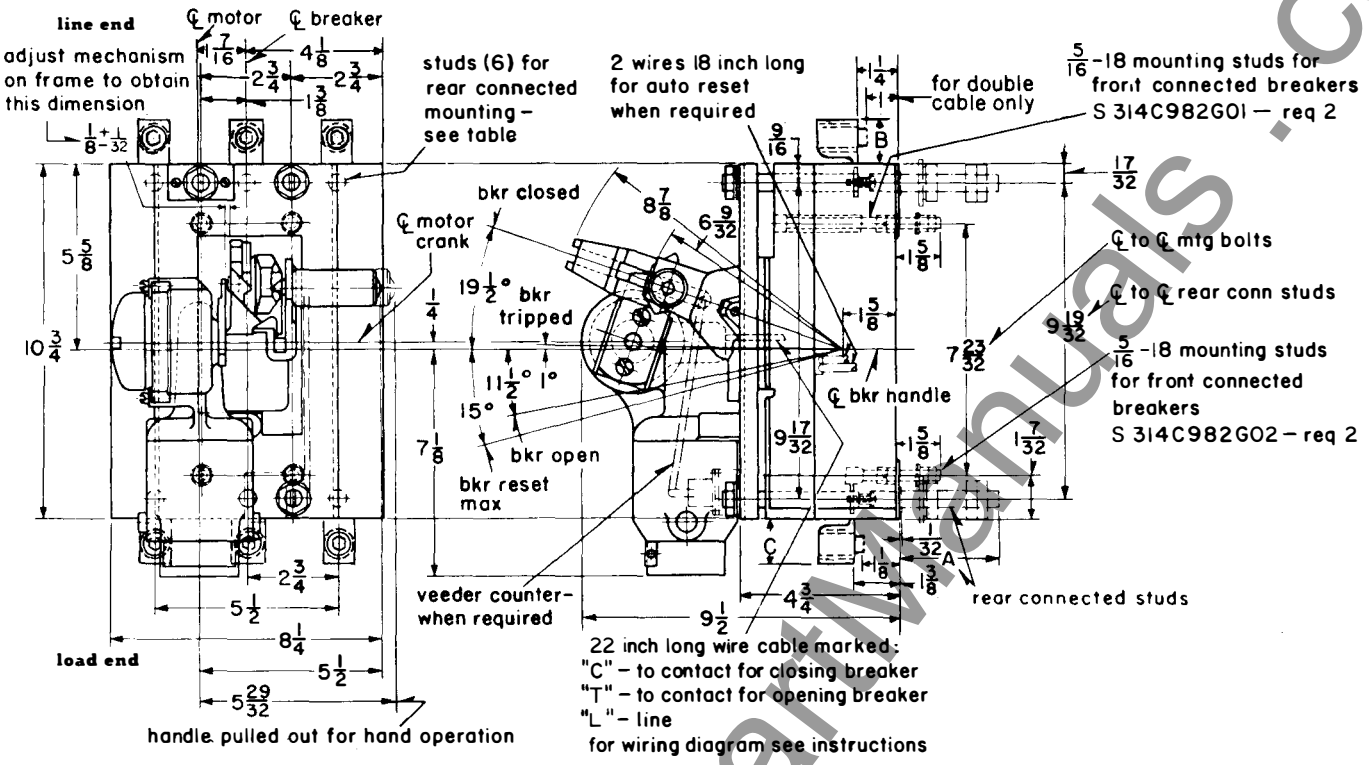

solderless terminals

breaker type	cable	style number	amp. rating	wire size	B	C
LA	single	94B0488G06	50 to 225	4 to 350 MCM	1⅜	1 9/32
LA	single	25B4621G06	250 to 350	1 to 600 MCM	1¾	1 21/32
LA	double	314C540G02	400	3/0 to 4/0	1 3/32	1

rear connected stud information

breaker type	amp. rating	style number	thd. size	dim. A
LA	50 to 400	05B7383G15	¾—16	5½
LA	50 to 400	05B7383G16	¾—16	8
LA	50 to 400	05B7383G17	¾—16	10½

drilling plans (front view)

front cover cutout ▲

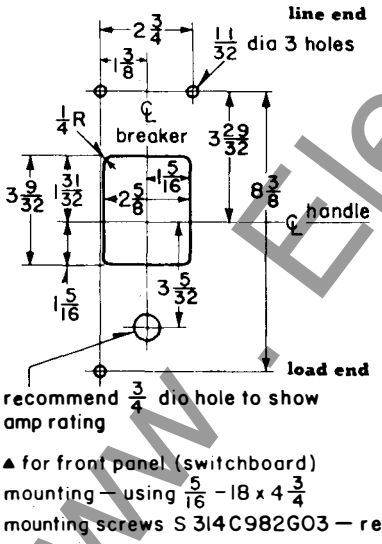

▲ for front panel (switchboard) mounting — using 5/16 -18 x 4 3/4 mounting screws S 314C982G03 — req 1

for rear connected studs

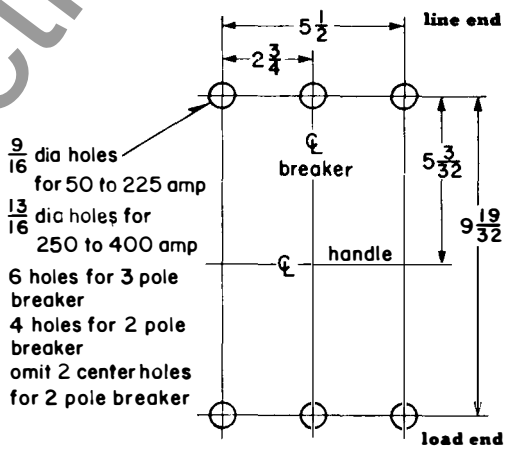

for front mounting bolts

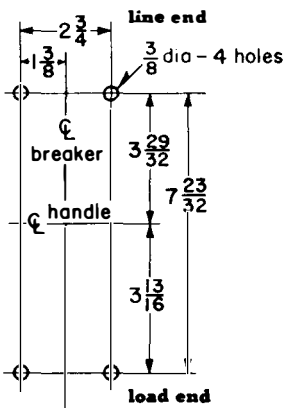

reproduced from drawing 314-C-985

Westinghouse Electric Corporation
Standard Control Division: Beaver Plant • Beaver, Pa.
printed in U.S.A.

www.ElectricalPartManuals.com

type LA 400 ampere
AB De-ion circuit breakers

2 and 3-pole

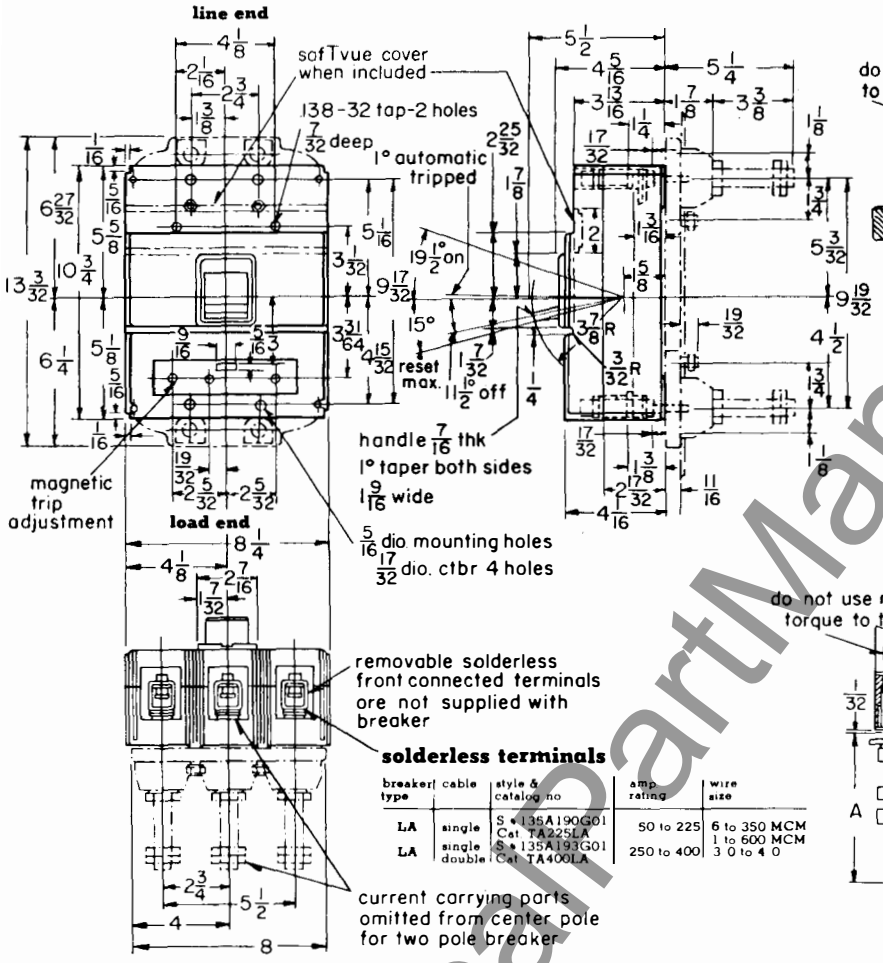

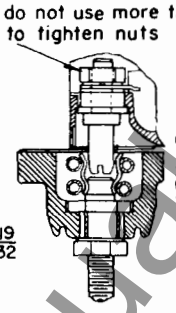

drawout stud

breaker type	poles	amp. rating	kit style no.	thd. size
LA	2	50 to 400	313C644G25	3/4 — 16
LA	3	50 to 400	313C644G26	3/4 — 16

1 kit required per breaker, not supplied with breaker

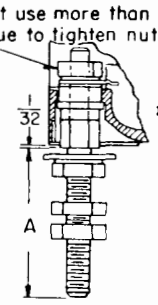

rear connected studs

breaker type	amp. rating	style no.	thd size	dim A
LA	50 to 400	05B7383G15	3/4 — 16	5 — 13/32
LA	50 to 400	05B7383G16	3/4 — 16	7 — 31/32
LA	50 to 400	05B7383G17	3/4 — 16	10 — 13/32

2 req. per pole, not supplied with breaker

solderless terminals

breaker type	cable	style & catalog no	amp. rating	wire size
LA	single	S • 135A190G01 Cat. TA225LA	50 to 225	6 to 350 MCM 1 to 600 MCM
LA	single double	S • 135A193G01 Cat. TA400LA	250 to 400	3 0 to 4 0

front cover cutout

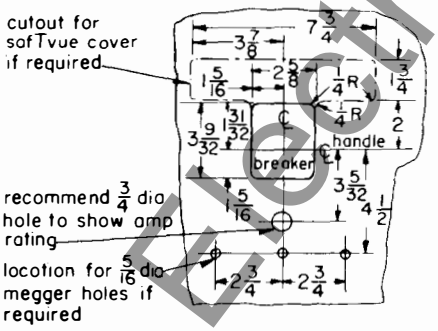

drilling plans

for mounting panel drawout studs

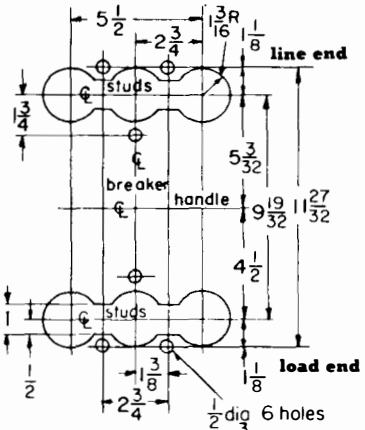

for rear connected studs

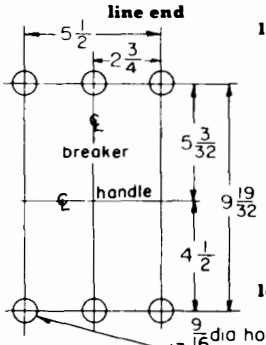

for mtg. bolts front connected terminals

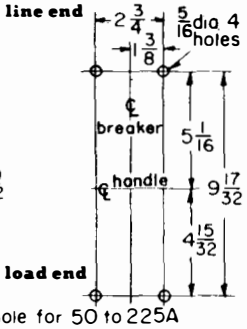

9/16 dia hole for 50 to 225A
13/16 dia hole for 250 to 400A
6 holes for 3 pole bkr.
4 holes for 2 pole bkr.
omit 2 center holes for 2 pole bkr.

reproduced from drawing 455-D-789

June, 1960
supersedes dimension sheet 29-170, pages 17 and 18, dated October, 1959
mailed to: E/243/ DS; D63-2C; C/308/DB; C/312/CB

www.ElectricalPartManuals.com

type LA 400 ampere
AB De-ion circuit breaker

motor operated
2 and 3-pole

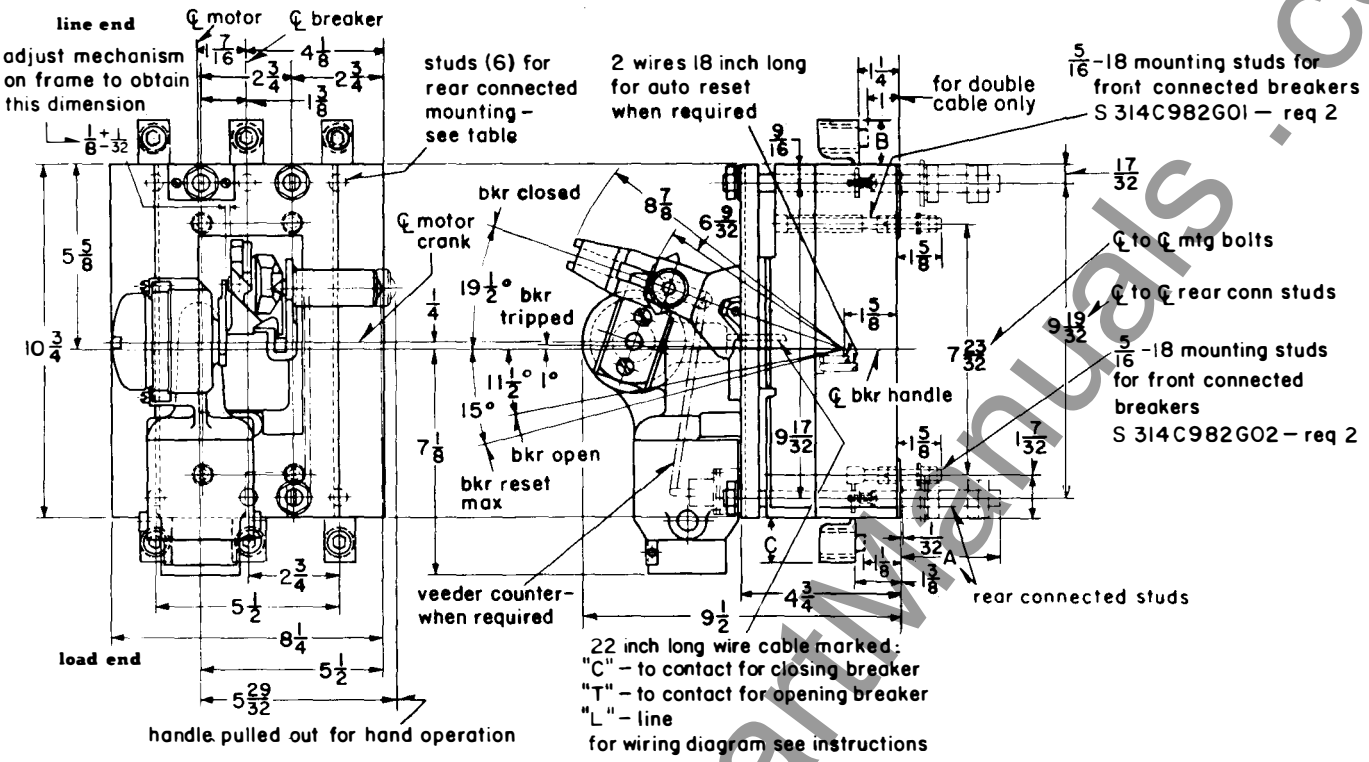

solderless terminals

breaker type	cable	style number	amp. rating	wire size	B	C
LA	single	94B0488G06	50 to 225	4 to 350 MCM	1 3/8	1 9/32
LA	single	25B4621G06	250 to 350	1 to 600 MCM	1 3/4	1 21/32
LA	double	314C540G02	400	3/0 to 4/0	1 3/32	1

rear connected stud information

breaker type	amp. rating	style number	thd. size	dim. A
LA	50 to 400	05B7383G15	3/4 — 16	5 1/2
LA	50 to 400	05B7383G16	3/4 — 16	8
LA	50 to 400	05B7383G17	3/4 — 16	10 1/2

drilling plans (front view)

front cover cutout ▲

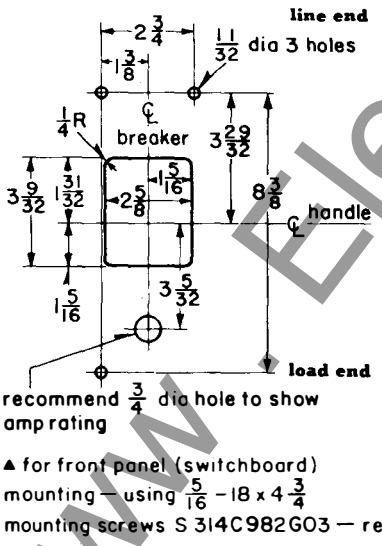

▲ for front panel (switchboard) mounting – using 5/16 – 18 x 4 3/4 mounting screws S 314C982G03 – req 1

for rear connected studs

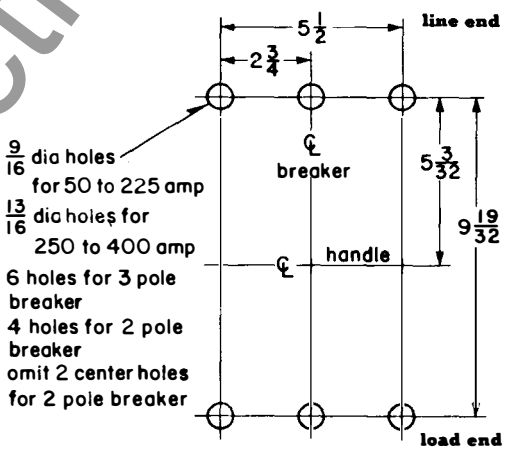

for front mounting bolts

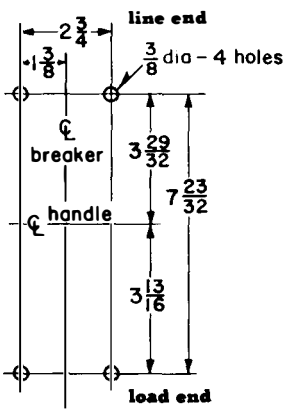

reproduced from drawing 314-C-985

Westinghouse Electric Corporation
Standard Control Division: Beaver Plant • Beaver, Pa.
printed in U.S.A.

www.ElectricalPartManuals.com

type LM 800 ampere
AB De-ion circuit breakers

2 and 3-pole

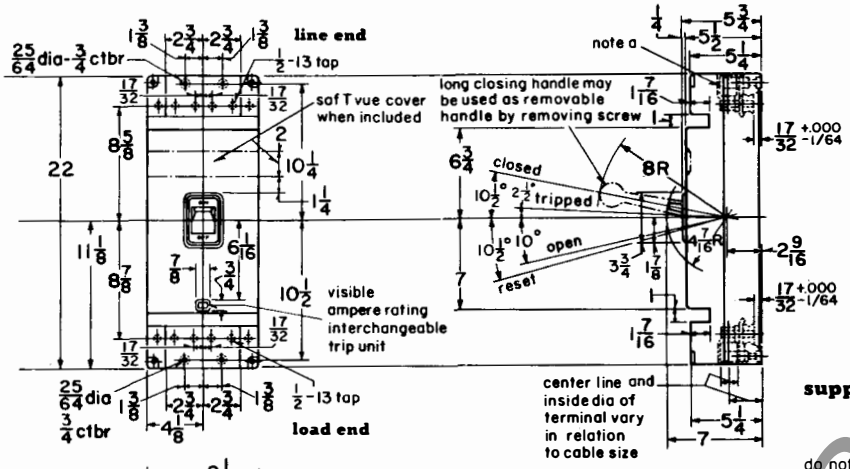

note a:
the following solderless terminals are supplied:
single cable for 125 to 350A ratings
double cable for 400 to 800A ratings
triple cable for 700 to 800A ratings

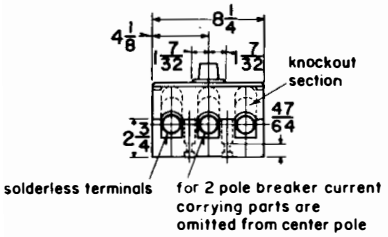

rear connected studs

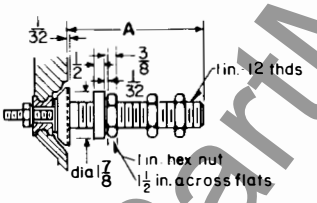

support blocks

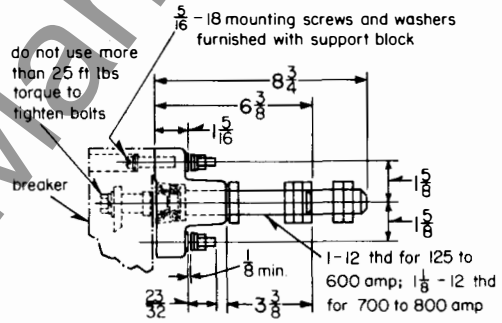

support blocks are not supplied with breaker but must be ordered separately; refer to dwg 313C644 when ordering support block (all parts necessary to convert a standard breaker are included).

drilling plans (front view)

for front mounting bolts

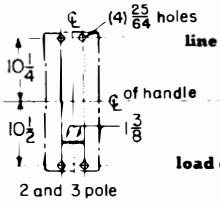

for rear connecting studs

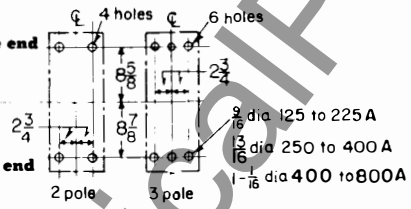

drilling plan for mounting panel (front view)

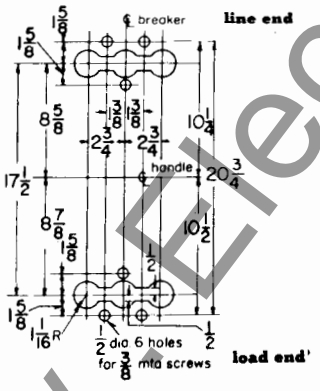

front cover cutout

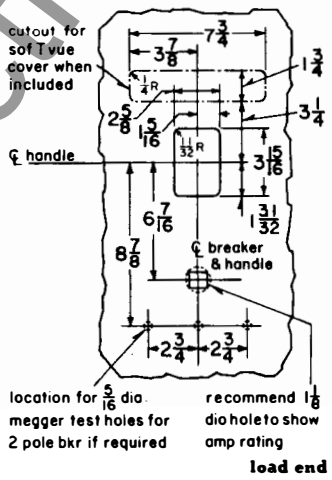

rear connecting studs

2-pole breakers require 4 studs
3-pole breakers require 6 studs

maximum stud ampere rating	extension: diameter inches and thread	extension: back of breaker inches A	style number
125 to 225	½-13	3¼	1241338
250 to 400	¾-16	5½	1241339
250 to 400	¾-16	8	1241340
250 to 400	¾-16	10½	1241341
450 to 600	1-12	5½	1241342
450 to 600	1-12	8	1241343
450 to 600	1-12	10½	1241344
700 to 800	1⅛-12	5½	05B738 3G19
700 to 800	1⅛-12	8	05B738 3G20
700 to 800	1⅛-12	10½	05B738 3G21

solderless terminals

ampere rating	style number	wire size MCM	solderless terminals, type
125 to 350	1154 307	4/0 to 600	single cable
400 to 500	1532 172	2 2 0 to 2-300	double cable
550 to 600	1532 173	2-300 to 2-500	double cable
700 to 800	313C234G01	2-600 to 2-700	double cable
700 to 800	451D243G01	3-300 to 3-400	triple cable

reproduced from drawings 313-C-366, 313-C-367

February, 1960
supersedes dimension sheet 29-170, pages 23 and 24, dated October, 1959
mailed to: E/243/DS; D63-2C; C25-2Y

www.ElectricalPartManuals.com

type LM 800 ampere
AB De-ion circuit breakers

motor operated
2 and 3-pole

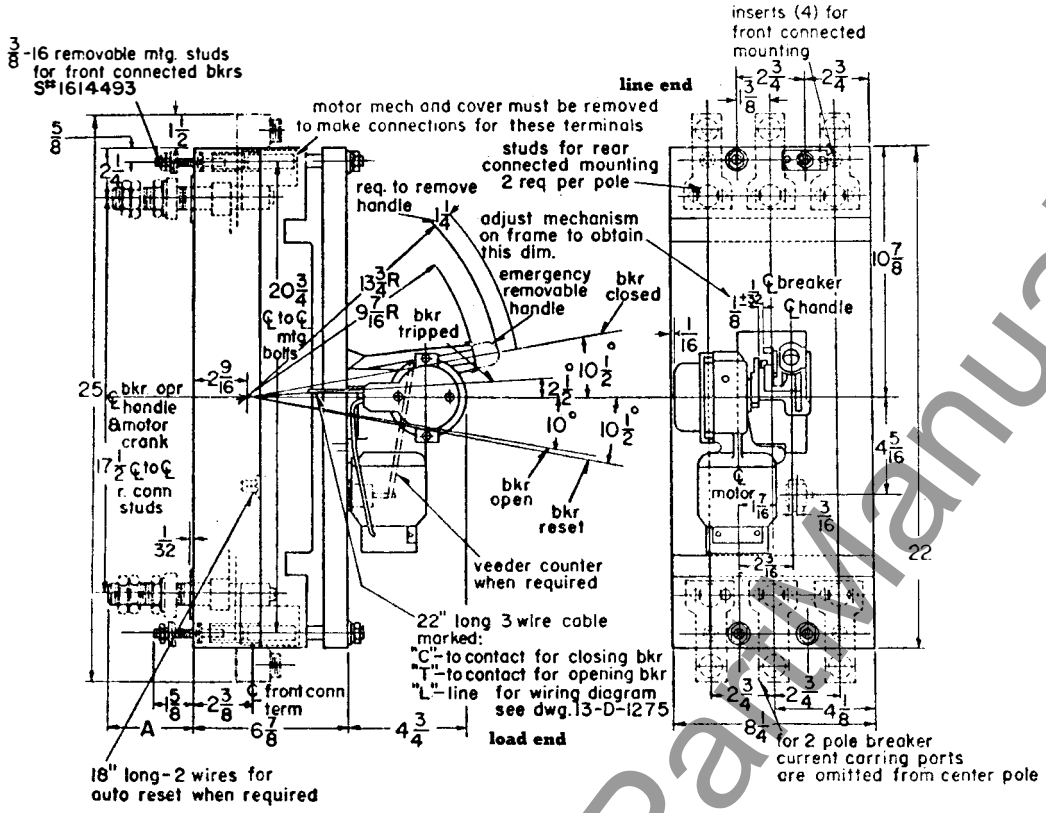

drilling plans

for mounting front connected breaker using mounting studs

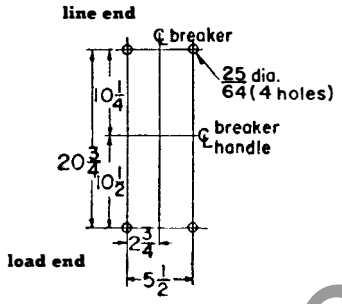

for mounting rear connected breaker using rear terminal studs

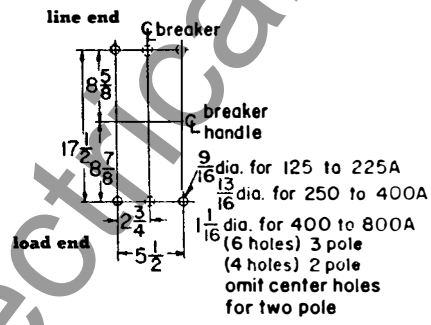

rear connecting studs

2-pole breakers require 4 studs
3-pole breakers require 6 studs

maximum stud ampere rating	extension: diameter inches and thread	extension: back of breaker inches A	style number
125 to 225	½-13	3¼	1241338
250 to 400	¾-16	5½	1241339
250 to 400	¾-16	8	1241340
250 to 400	¾-16	10½	1241341
450 to 800	1-12	5½	1241342
450 to 800	1-12	8	1241343
450 to 800	1-12	10½	1241344

reproduced from drawing 313-C-368

solderless terminals

wire size MCM	style number	solderless terminals, type
1 to 600	1614688	single cable ✝
500 to 1000	1614689	single cable ✝
2 0 to 300	1532172	double cable ▲
300 to 500	1532173	double cable ▲
600 to 700	313C234G01	double cable ▲
300 to 500	451D243G01	triple cable ▲

✝extended terminals (standard for electrically operated breakers)
▲motor mech and cover must be removed to make connections for these terminals.

Westinghouse Electric Corporation
Standard Control Division: Beaver Plant • Beaver, Pa.
printed in U.S.A.

www.ElectricalPartManuals.com

type MA 800 ampere
AB De-ion circuit breakers

2 and 3-pole

solderless terminals
for use with cu. or al. cable
(not supplied with breaker)

cable	style and catalog no.	ampere rating	wire size
single	135A191GO1 TA225MA	125-225	6-350 MCM
single double	135A194GO1 TA400MA	250-400	4-600 MCM 1/0-250 MCM
double	135A197GO1 TA600MA	500-600	3/0-600 MCM
triple	135A199GO1 TA800MA	700-800	4/0-400 MCM

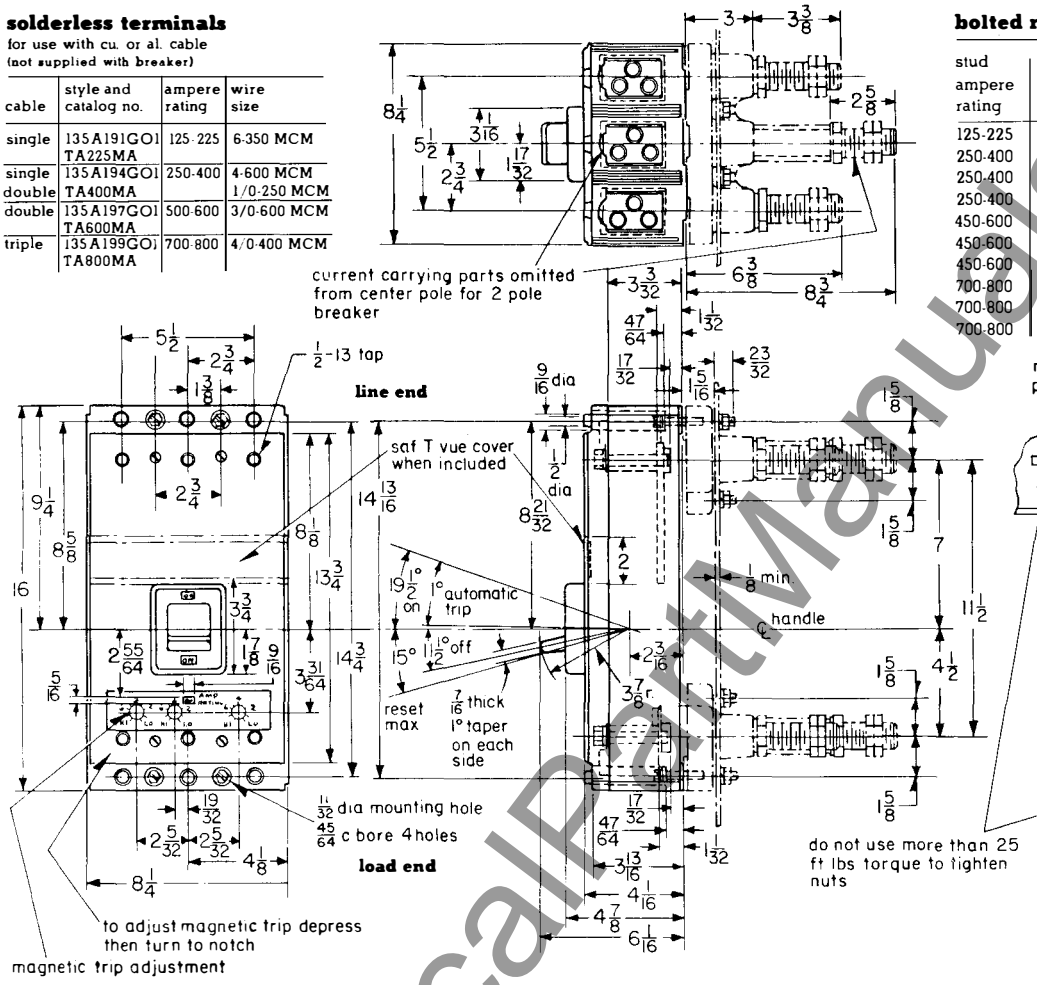

bolted rear connected studs

stud ampere rating	stud style number	thread size	dimension A
125-225	314C960GO1	1/2-13	3 27/32
250-400	314C960GO4	3/4-16	5 29/32
250-400	314C960GO5	3/4-16	8 13/32
250-400	314C960GO6	3/4-16	10 29/32
450-600	314C960GO7	1-12	5 29/32
450-600	314C960GO8	1-12	8 13/32
450-600	314C960GO9	1-12	10 29/32
700-800	314C960G10	1 1/8-12	5 29/32
700-800	314C960G11	1 1/8-12	8 13/32
700-800	314C960G12	1 1/8-12	10 29/32

rear connected studs - 2 required per pole (not supplied with breaker)

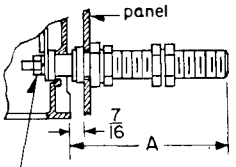

drawout rear connected studs

poles	ampere rating	kit style number	thread size
2	125-800	313C644G27	1 1/8-12
3	125-800	313C644G28	1 1/8-12

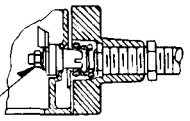

drawout stud assemby one kit per breaker (not supplied with breaker)

drilling plans (front view) for mounting panel

for drawout studs

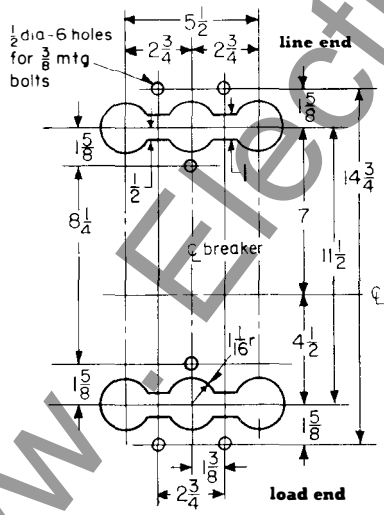

for rear connected studs

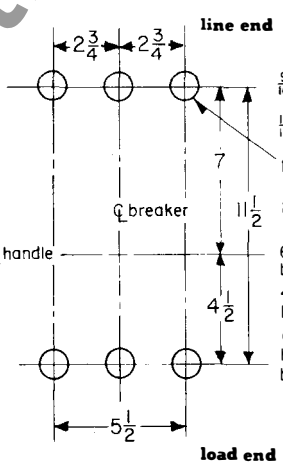

dia hole for 125A to 225A
dia hole for 250A to 400A
dia hole for 450A to 600A
dia hole for 700A to 800A
6 holes for 3 pole breaker
4 holes for 2 pole breaker
omit 2 center holes for 2 pole breaker

for mounting bolts front connected terminals

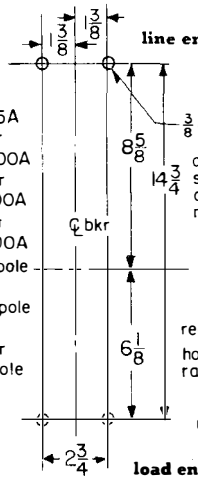

front cover cutout

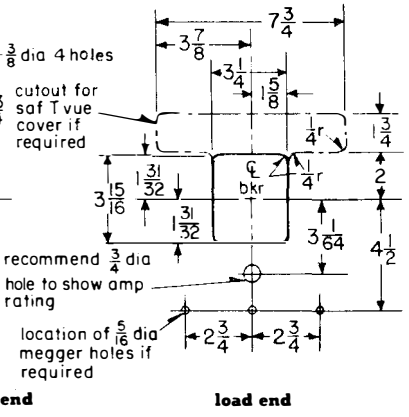

reproduced from drawing 457-D-265

June, 1960
new information
mailed to: E/243/DS; D63-2C; C21-2Y; C/308/DB; C/312/CB

Westinghouse Electric Corporation
Standard Control Division: Beaver Plant . Beaver, Pa.
printed in U.S.A.

www.ElectricalPartManuals.com

www . ElectricalPartManuals . com

MARK 75 HF 100 ampere

AB De-ion circuit breakers

2 and 3-pole

2-pole **3-pole** **4-poles protected** **3 poles protected, 1 pole non-automatic**

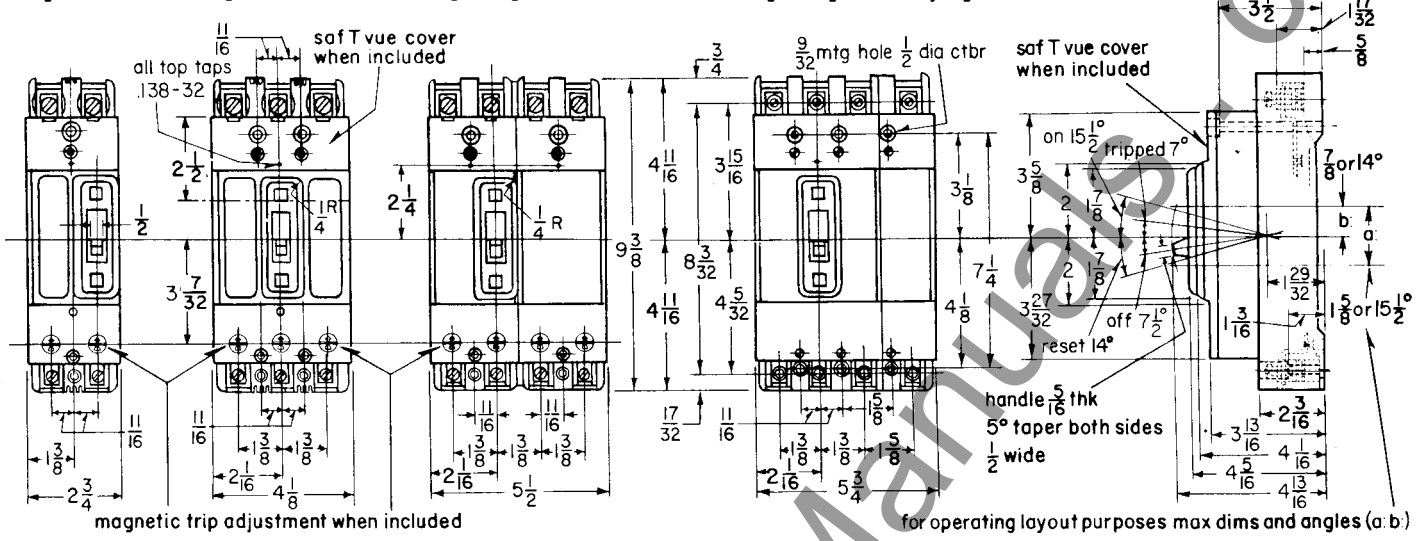

terminal arrangements

bus connection **wire connection**

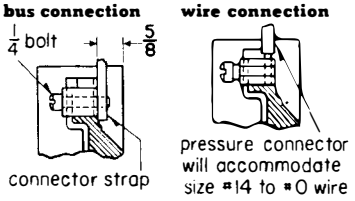

drilling plan

for plug-in block

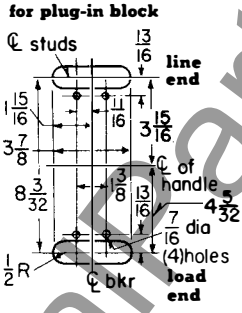

rear connecting stud identification

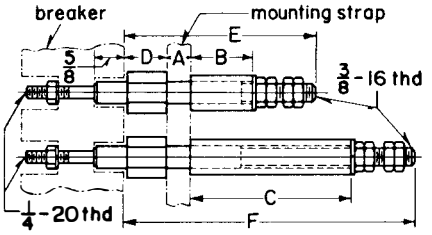

mtg. strap thkns. A	type stud	stud style no.	tube style no.	B	C	D	E	F
3/8 & 1/2	short	1222 937	1222929	1 11/32		15/16	4 1/8	
3/8 & 1/2	long	1222 938	1222930		3 7/16	15/16		6 1/4
3/4	short	1222 937	1222931	31/32		15/16	4 1/8	
3/4	long	1222 938	1222932		3 1/16	15/16		6 1/4
1	short	1222 937	1222933	23/32		15/16	4 1/8	
1	long	1222 938	1222934		2 13/16	15/16		6 1/4
3/8 & 1/2	short	1300 057	1222929	1 11/32		1/16	3 1/4	
3/8 & 1/2	long	1300 058	1222930		3 7/16	1/16		5 3/8
3/4	short	1300 057	1222931	31/32		1/16	3 1/4	
3/4	long	1300 058	1222932		3 1/16	1/16		5 3/8
1	short	1300 057	1222933	23/32		1/16	3 1/4	
1	long	1300 058	1222934		2 13/16	1/16		5 3/8
1 1/2	short	1300 057		0		1/16	3 1/4	
1 1/2	long	1300 058	1577278		2 5/16	1/16		5 3/8
2	short	1300 057		0		1/16	3 1/4	
2	long	1300 058	1577279		1 13/16	1/16		5 3/8

ordering instructions: stud complete consists of one stud assembly and one tube as per chart—order long and short studs as required to obtain proper bus spacing

drilling plans (front view)

for front mounting bolts

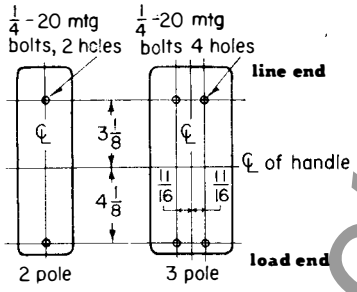

for rear connecting studs

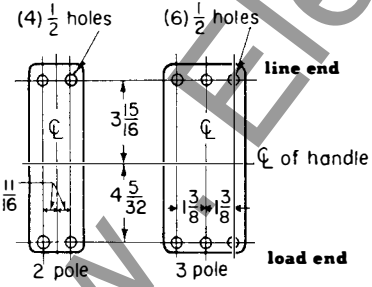

front cover cutout

bkr dims shown only. for cutout recommend 3/32 be added to dims shown

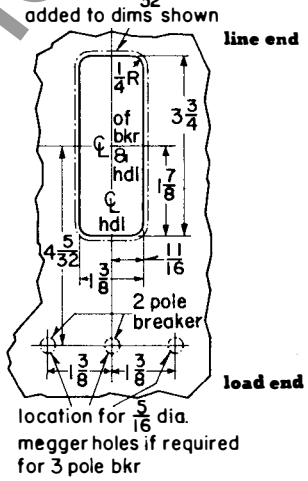

plug-in mounting block

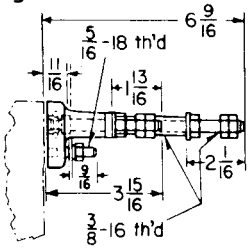

reproduced from drawing 1-A-4143

October, 1959
new information
mailed to: E/243/DS; D63-2C; C25-2Y

Westinghouse Electric Corporation
Standard Control Division: Beaver Plant • Beaver, Pa.
printed in U.S.A.

www.ElectricalPartManuals.com

www . ElectricalPartManuals . com

MARK 75 HK 225 ampere

AB De-ion circuit breakers

2 and 3-pole

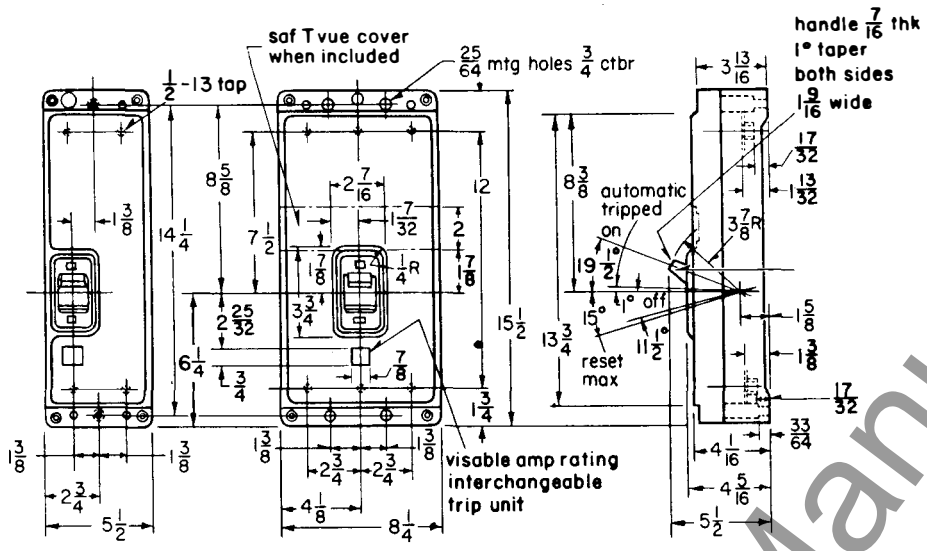

front cover cutout

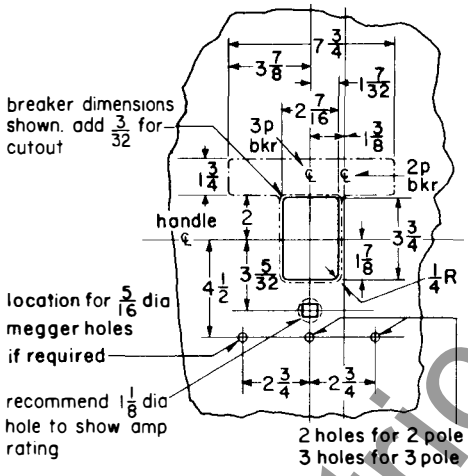

drilling plan for mounting panel (front view)

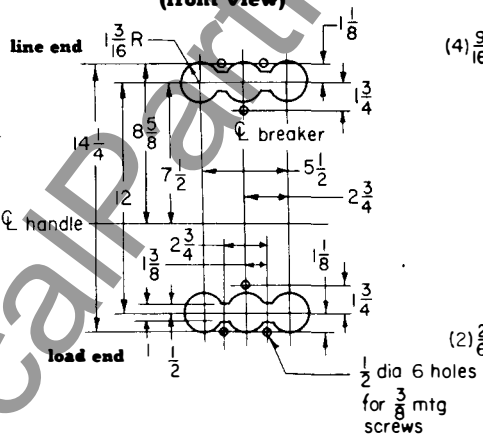

drilling plans (front view)

for rear connecting studs

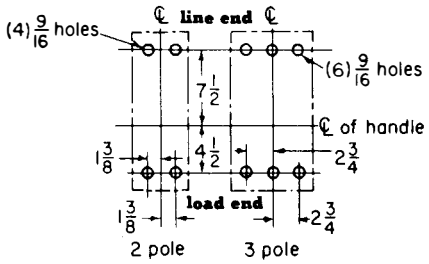

for front mounting bolts

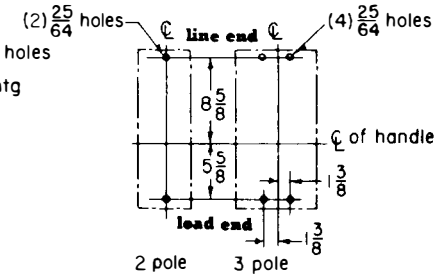

rear connected studs

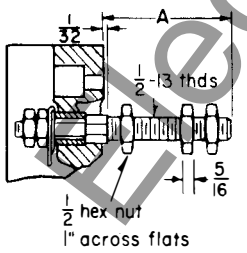

plug-in mounting block

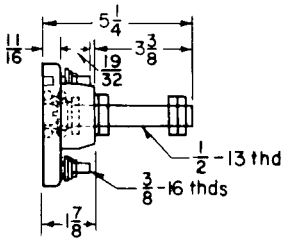

rear connecting studs • ½-13 thread

ampere rating	style number	dimension A
70 to 225	1241 345	3 7/32
70 to 225	1241 346	6 7/32
70 to 225	1241 392	4 31/32

front connecting terminals

ampere rating	style number	wire size
70-100	1154 301	= 14 to 1 0
125-200	1346 463	=6 to 250 MCM
225	1346 464	=4 to 350 MCM

reproduced from drawings 13-B-4080, 13-B-4081, 13-B-4082, 13-B-4083

October, 1959
new information
mailed to: E/243/DS; D63-2C; C25-2Y

www.ElectricalPartManuals.com

MARK 75 HK 225 ampere
AB De-ion circuit breakers

motor operated
2 and 3-pole

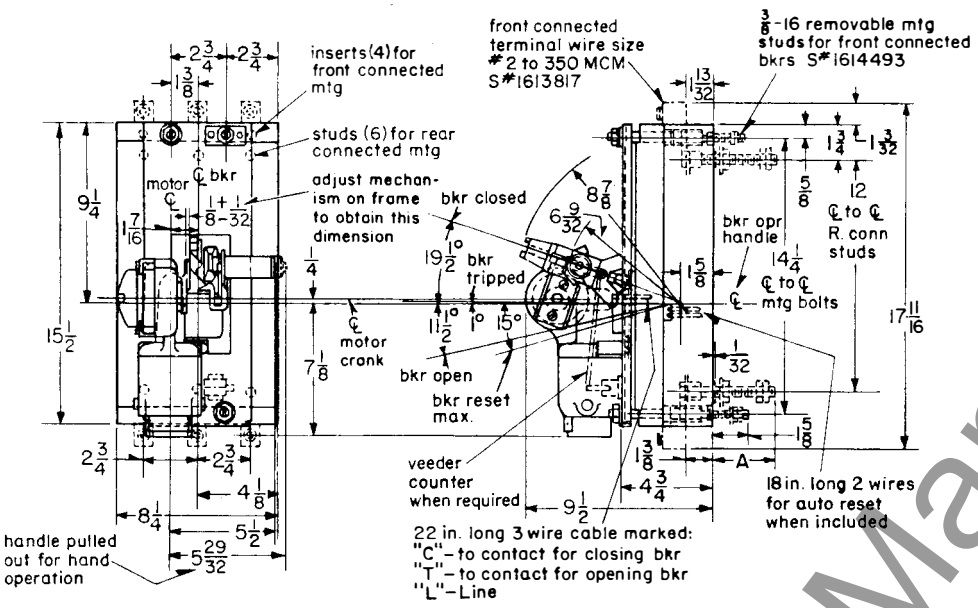

rear connecting studs • ½-13 thread

ampere rating	style number	dimension A
70 to 225	1241 345	3 7/32
70 to 225	1241 346	6 5/32
70 to 225	1241 392	4 31/32

drilling plans (front view)

for front mounting bolts

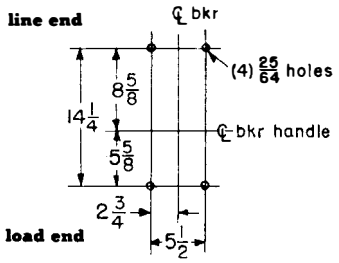

for rear connecting studs

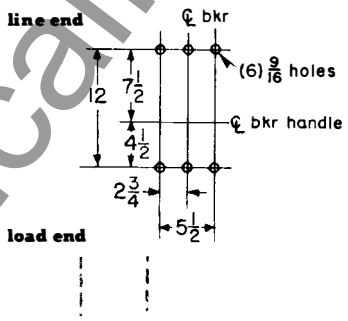

reproduced from drawings 25-B-4568, 25-B-4439

Westinghouse Electric Corporation
Standard Control Division: Beaver Plant • Beaver, Pa.
printed in U.S.A.

www . ElectricalPartManuals . com

MARK 75 HLM 800 ampere

AB De-ion circuit breakers

2 and 3-pole

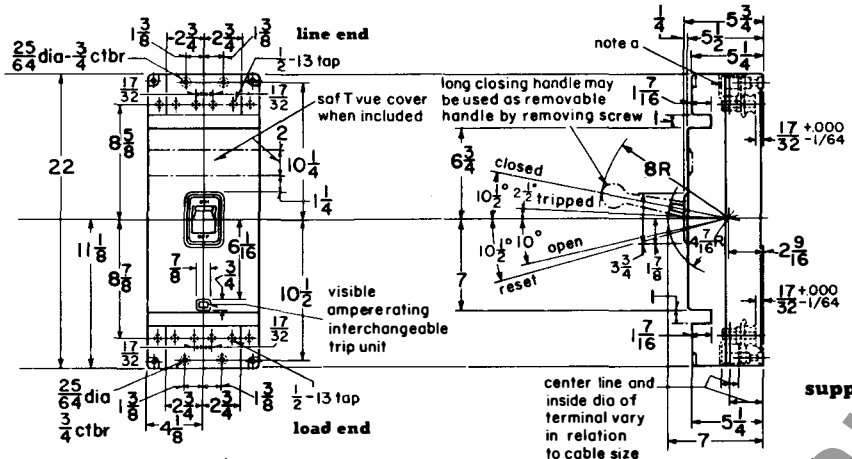

note a:
the following solderless terminals are supplied:
single cable for 125 to 350A ratings
double cable for 400 to 800A ratings
triple cable for 700 to 800A ratings

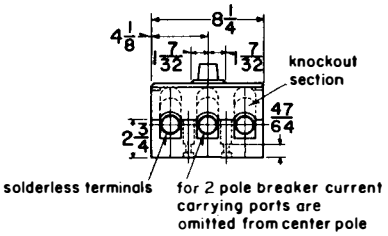

rear connected studs

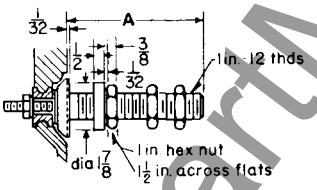

support blocks

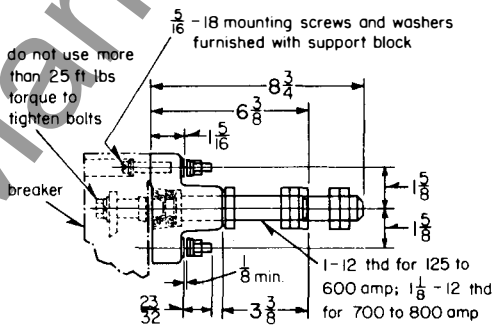

support blocks are not supplied with breaker but must be ordered separately; refer to dwg 313C644 when ordering support block (all parts necessary to convert a standard breaker are included).

drilling plans (front view)

for front mounting bolts

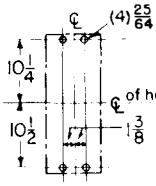

for rear connecting studs

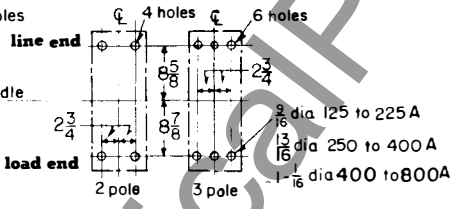

drilling plan for mounting panel (front view)

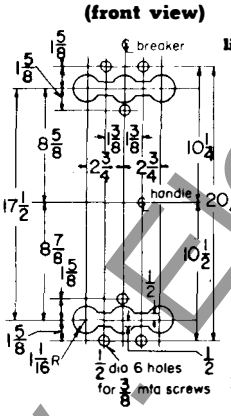

front cover cutout

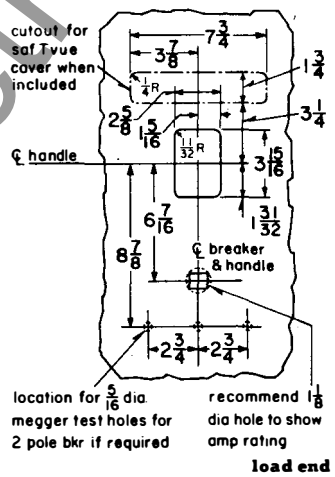

rear connecting studs

2-pole breakers require 4 studs
3-pole breakers require 6 studs

maximum stud ampere rating	extension: diameter inches and thread	extension: back of breaker inches A	style number
125 to 225	½-13	3¼	1241338
250 to 400	¾-16	5½	1241339
250 to 400	¾-16	8	1241340
250 to 400	¾-16	10½	1241341
450 to 600	1-12	5½	1241342
450 to 600	1-12	8	1241343
450 to 600	1-12	10½	1241344
700 to 800	1⅛-12	5½	05B738 3G19
700 to 800	1⅛-12	8	05B738 3G20
700 to 800	1⅛-12	10½	05B738 3G21

solderless terminals

ampere rating	style number	wire size MCM	solderless terminals, type
125 to 350	1154 307	4 0 to 600	single cable
400 to 500	1532 172	2 2 0 to 2-300	double cable
550 to 600	1532 173	2-300 to 2-500	double cable
700 to 800	313C234G01	2-600 to 2-700	double cable
700 to 800	451D243G01	3-300 to 3-400	triple cable

reproduced from drawings 313-C-366, 313-C-367

February, 1960
supersedes dimension sheet 29-170, pages 31 and 32, dated October, 1959
mailed to: E/243/DS; D63-2C; C25-2Y

www.ElectricalPartManuals.com

MARK 75 HLM 800 ampere
AB De-ion circuit breakers

motor operated
2 and 3-pole

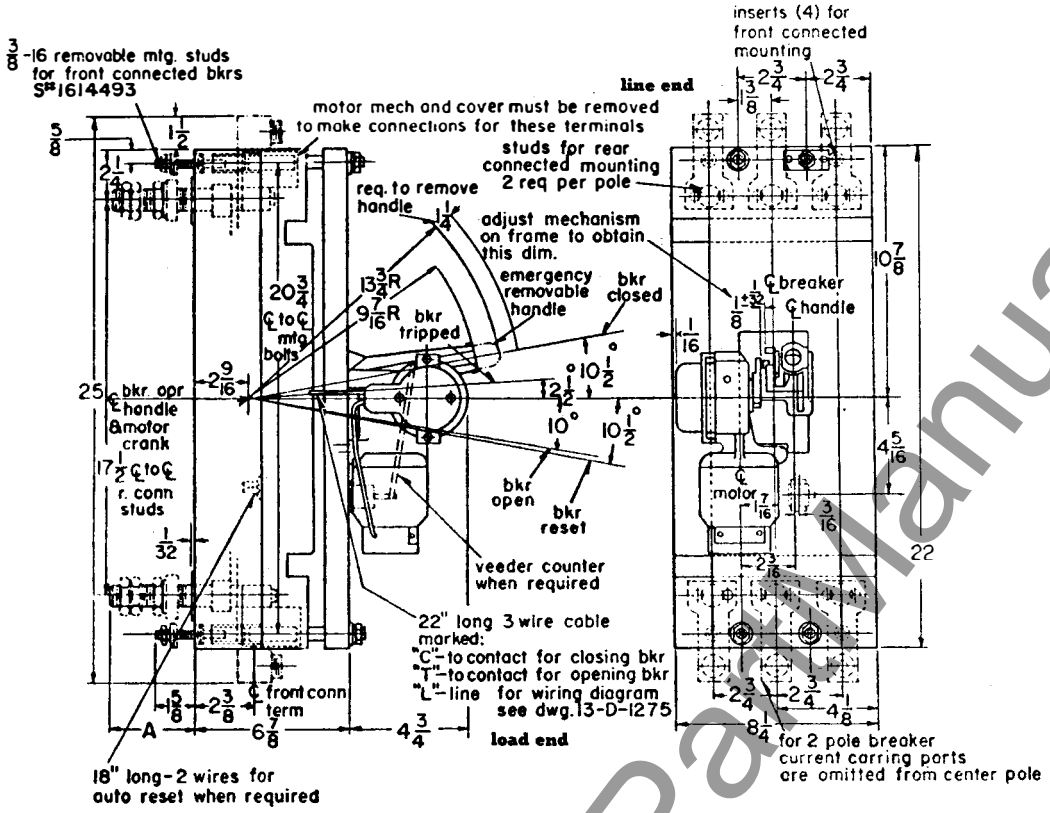

drilling plans

for mounting front connected breaker using mounting studs

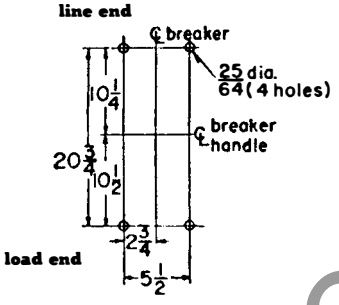

for mounting rear connected breaker using rear terminal studs

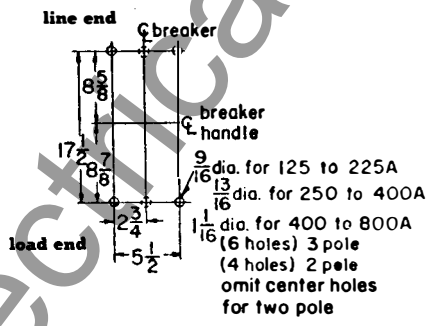

rear connecting studs

2-pole breakers require 4 studs
3-pole breakers require 6 studs

maximum stud ampere rating	extension: diameter inches and thread	extension: back of breaker inches A	style number
125 to 225	½-13	3¼	1241338
250 to 400	¾-16	5½	1241339
250 to 400	¾-16	8	1241340
250 to 400	¾-16	10½	1241341
450 to 800	1-12	5½	1241342
450 to 800	1-12	8	1241343
450 to 800	1-12	10½	1241344

solderless terminals

wire size MCM	style number	solderless terminals, type
1 to 600	1614688	single cable +
500 to 1000	1614689	single cable +
2/0 to 300	1532172	double cable ▲
300 to 500	1532173	double cable ▲
600 to 700	313C234G01	double cable ▲
300 to 500	451D243G01	triple cable ▲

+extended terminals (standard for electrically operated breakers)
▲motor mech and cover must be removed to make connections for these terminals.

reproduced from drawing 313-C-368

www.ElectricalPartManuals.com