ECO	BY	DATE
81480	SPH	8/27/93

This engineering drawing (CAD / CAM or otherwise) is the proprietary property of Square D Company, not part of the public domain, and is issued with the express understanding and agreement that it is not to be reproduced or copied in whole or in part or used for furnishing information to others, or used directly or indirectly, in any way detrimental to the interest of Square D Company and is to be returned upon request by Square D Company. All Rights Reserved.

© [illegible] Square D Company

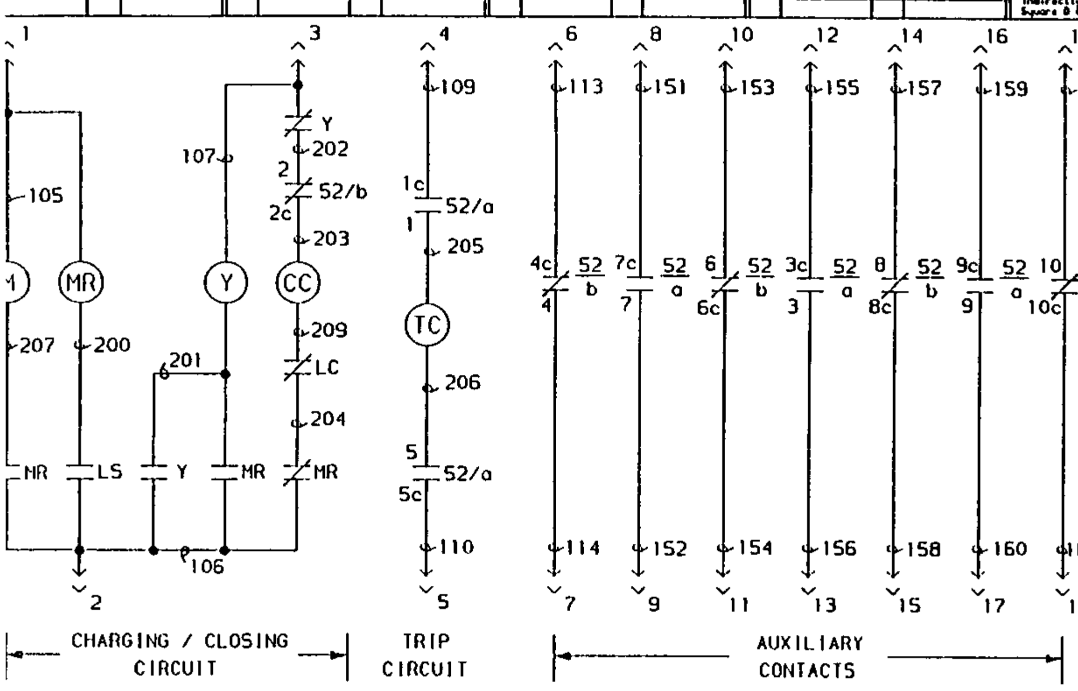

OPERATION OF BREAKER

1. THE BREAKER WILL NOT CLOSE UNTIL THE SPRINGS ARE CHARGED.
2. WHEN THE SPRINGS ARE DISCHARGED, SPRING CHARGING LIMIT SWITCH CONTACT 52/LS IS CLOSED. THIS PICKS UP THE MOTOR RELAY (52MR), WHICH ENERGIZES THE SPRING CHARGING MOTOR (52/M). 52/M RUNS UNTIL THE CLOSING SPRINGS ARE CHARGED. WHEN THE SPRINGS ARE CHARGED, 52/LS OPENS, DROPPING OUT 52MR, WHICH DE-ENERGIZES 52M.
3. WHEN 52MR DROPS OUT, THE NORMALLY CLOSED 52MR CONTACT CLOSES ALLOWING CONTINUITY IN THE CLOSING SOLENOID 52/CC CIRCUIT. IF CLOSING SIGNAL IS APPLIED, 52/CC IS ENERGIZED, UNLATCHING THE CLOSING SPRINGS, CLOSING THE BREAKER, AND CHARGING THE OPENING SPRINGS. 52/b CONTACTS OPEN, DE-ENERGIZING 52/CC. THE DISCHARGING OF THE CLOSING SPRINGS CAUSES 52/LS TO CLOSE. 52MR PICKS UP CLOSING THE NORMALLY OPEN 52MR CONTACT ALLOWING CONTINUITY IN THE ANTI-PUMP RELAY (52Y) CIRCUIT. THE 52Y CONTACTS CHANGE STATE SEALING IN 52Y AND PREVENTING 52/CC FROM BEING RE-ENERGIZED UNTIL THE CLOSING SIGNAL IS REMOVED. THIS LIMITS THE BREAKER TO ONE CLOSING OPERATION PER CLOSING SIGNAL.
4. WHEN THE BREAKER CLOSES, 52/a AUXILIARY CONTACTS CLOSE ALLOWING CONTINUITY IN THE TRIP SOLENOID (52/TC) CIRCUIT. IF A TRIPPING SIGNAL IS APPLIED, 52/TC IS ENERGIZED, UNLATCHING THE TRIPPING SPRINGS, OPENING THE BREAKER. THE 52/a CONTACTS OPEN, DE-ENERGIZING 52/TC WHILE THE BREAKER IS OPEN.
5. REMOTE STATUS INDICATORS ARE CONNECTED TO TERMINALS TO INDICATE IF THE BREAKER IS OPEN OR CLOSED. CONTACT 52/a IS CLOSED WHEN THE BREAKER IS CLOSED. CONTACT 52/b IS CLOSED WHEN THE BREAKER IS OPEN.

NOTES:

1. BREAKER SHOWN IN OPEN POSITION & MAIN SPRINGS CHARGED.
2. SEE 44069-358 FOR WIRING DIAGRAM.

LEGEND

52 VACUUM CIRCUIT BREAKER
52M SPRING CHARGING MOTOR
52/LS SPRING CHARGING MOTOR LIMIT SWITCH
52/TC TRIP COIL (OPENING COIL)
52/CC SPRING RELEASE COIL (CLOSING COIL)
52Y ANTI-PUMP RELAY
52MR MOTOR RELAY
52/a AUX. SWITCH CONTACTS, OPEN WHEN BREAKER IS OPEN
52/b AUX. SWITCH CONTACTS, CLOSED WHEN BREAKER IS OPEN
52/LC LATCH CHECK SWITCH

FOR CONTROL VOLTAGE:

TRIP 24V, 48V, 125V DC OR 120V AC
CLOSE 48V, 125V DC OR 120V AC

⚠4 - RELEASED IN SMYRNA

LINEAR DIMENSIONS	ONE PLACE DECIMAL ± .060 TWO PLACE DECIMAL ± .030 THREE PLACE DECIMAL ± .015	DESIGN LOC: 17	USED ON: VAD-2 BREAKERS WITH AMP PLUG	ECO: 2/11/91
		DRAWN BY: MEC	RAWSTOCK: NONE	DATE: VA21C23
HOLE DIMENSIONS	PUNCHED/DRILLED ± .005	CHKD BY: SPH	MATERIAL DESCRIPTION: NONE	
		ENGINEER: LHS	FINISH DESCRIPTION: NONE	SCALE: NONE

PRINTS TO: -- -- -- -- -- -- -- --

TITLE: VAD-2 SCHEMATIC DIAGRAM AMP PLUG

PART# 44069-357 QTY: -

SQUARE D COMPANY
POWER EQUIPMENT

B 44069-357

REV	ECO	BY	DATE
A	81480	SPH	8/27/93

This engineering drawing (CAD / CAM or otherwise) is the proprietary property of Square D Company, not part of the public domain, and is issued with the express understanding that it is not to be reproduced or copied in whole or in part or used for furnishing information to others, or used directly or indirectly, in any way detrimental to the interest of Square D Company and is to be returned upon request by Square D Company. ALL Rights Reserved.

© 1993 Square D Company

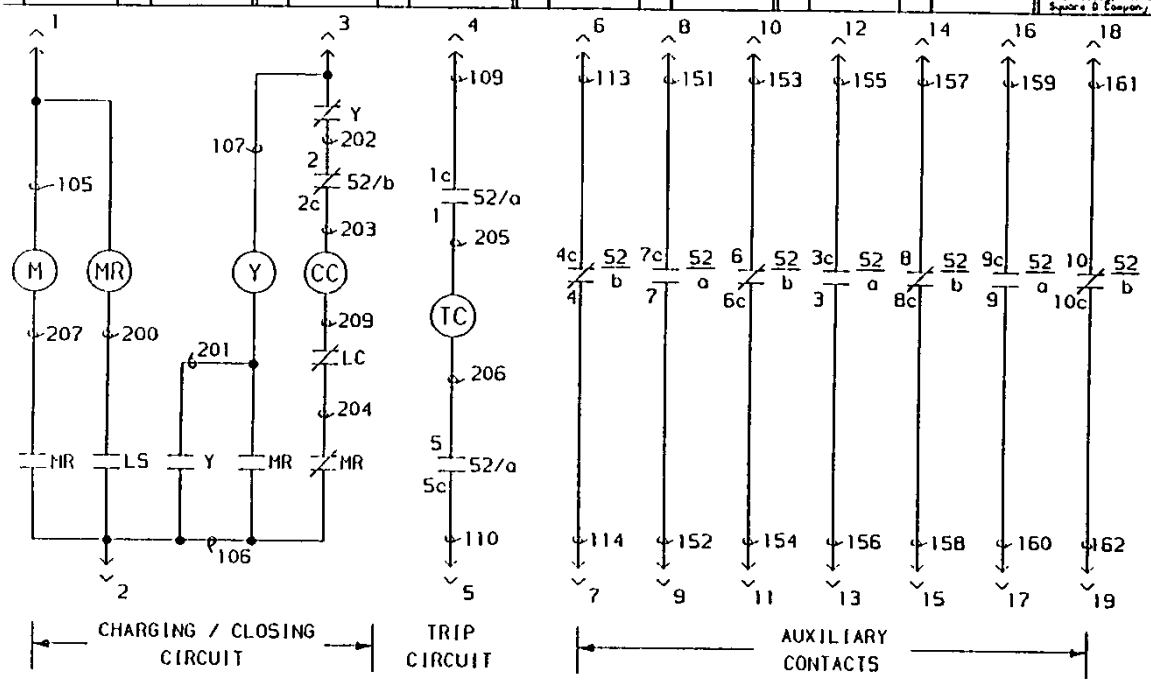

OPERATION OF BREAKER

1. THE BREAKER WILL NOT CLOSE UNTIL THE SPRINGS ARE CHARGED.
2. WHEN THE SPRINGS ARE DISCHARGED, SPRING CHARGING LIMIT SWITCH CONTACT 52/LS IS CLOSED. THIS PICKS UP THE MOTOR RELAY (52MR), WHICH ENERGIZES THE SPRING CHARGING MOTOR (52/M). 52/M RUNS UNTIL THE CLOSING SPRINGS ARE CHARGED. WHEN THE SPRINGS ARE CHARGED, 52/LS OPENS, DROPPING OUT 52MR, WHICH DE-ENERGIZES 52M.
3. WHEN 52MR DROPS OUT, THE NORMALLY CLOSED 52MR CONTACT CLOSES ALLOWING CONTINUITY IN THE CLOSING SOLENOID 52/CC CIRCUIT. IF CLOSING SIGNAL IS APPLIED, 52/CC IS ENERGIZED, UNLATCHING THE CLOSING SPRINGS, CLOSING THE BREAKER, AND CHARGING THE OPENING SPRINGS. 52/b CONTACTS OPEN, DE-ENERGIZING 52/CC. THE DISCHARGING OF THE CLOSING SPRINGS CAUSES 52/LS TO CLOSE. 52MR PICKS UP CLOSING THE NORMALLY OPEN 52MR CONTACT ALLOWING CONTINUITY IN THE ANTI-PUMP RELAY (52Y) CIRCUIT. THE 52Y CONTACTS CHANGE STATE SEALING IN 52Y AND PREVENTING 52/CC FROM BEING RE-ENERGIZED UNTIL THE CLOSING SIGNAL IS REMOVED. THIS LIMITS THE BREAKER TO ONE CLOSING OPERATION PER CLOSING SIGNAL.
4. WHEN THE BREAKER CLOSES, 52/a AUXILIARY CONTACTS CLOSE ALLOWING CONTINUITY IN THE TRIP SOLENOID (52/TC) CIRCUIT. IF A TRIPPING SIGNAL IS APPLIED, 52/TC IS ENERGIZED, UNLATCHING THE TRIPPING SPRINGS, OPENING THE BREAKER. THE 52/a CONTACTS OPEN, DE-ENERGIZING 52/TC WHILE THE BREAKER IS OPEN.
5. REMOTE STATUS INDICATORS ARE CONNECTED TO TERMINALS TO INDICATE IF THE BREAKER IS OPEN OR CLOSED. CONTACT 52/a IS CLOSED WHEN THE BREAKER IS CLOSED. CONTACT 52/b IS CLOSED WHEN THE BREAKER IS OPEN.

NOTES:

1. BREAKER SHOWN IN OPEN POSITION & MAIN SPRINGS CHARGED.
2. SEE 44069-358 FOR WIRING DIAGRAM.

LEGEND

52 VACUUM CIRCUIT BREAKER
52M SPRING CHARGING MOTOR
52/LS SPRING CHARGING MOTOR LIMIT SWITCH
52/TC TRIP COIL (OPENING COIL)
52/CC SPRING RELEASE COIL (CLOSING COIL)
52Y ANTI-PUMP RELAY
52MR MOTOR RELAY
52/a AUX. SWITCH CONTACTS, OPEN WHEN BREAKER IS OPEN
52/b AUX. SWITCH CONTACTS, CLOSED WHEN BREAKER IS OPEN
52/LC LATCH CHECK SWITCH

FOR CONTROL VOLTAGE:

TRIP 24V, 48V, 125V DC OR 120V AC
CLOSE 48V, 125V DC OR 120V AC

A - RELEASED IN SMYRNA

STANDARD TOLERANCE UNLESS OTHERWISE	LINEAR DIMENSIONS	ONE PLACE DECIMAL ± .060 TWO PLACE DECIMAL ± .030 THREE PLACE DECIMAL ± .015	DESIGN LOC. 17	USED ON. VAD-2 BREAKERS WITH AMP PLUG	ECO. 2/11/91	PRINTS TO.	SQUARE D COMPANY POWER EQUIPMENT
	HOLE	PUNCHED/DRILLED ± .005	DRAWN BY. HEC CHKD BY. SPH	RAWSTOCK. NONE MATERIAL DESCRIPTION. NONE	DATE. VA21C23	TITLE. VAD-2 SCHEMATIC DIAGRAM AMP PLUG	

EV	ECO	BY	DATE
A	B1480	SPH	8/27/93

This engineering drawing (CAD / CAM or otherwise) is the proprietary property of Square D Company, not part of the public domain, and is issued with the express understanding that it is not to be reproduced or copied in whole or in part or used for furnishing information to others, or used directly or indirectly, in any way detrimental to the interest of Square D Company and is to be returned upon request by Square D Company. ALL Rights Reserved.

© 1993 Square D Company

SECONDARY DISCONNECT (SD)

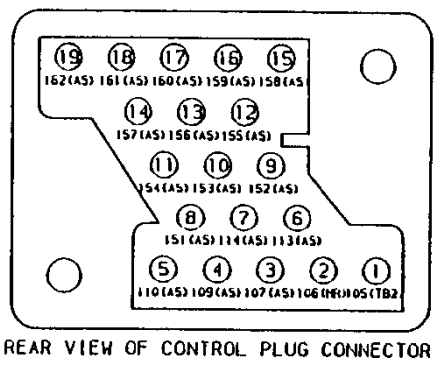

REAR VIEW OF CONTROL PLUG CONNECTOR

LEGEND

52 AS	AUXILIARY SWITCH
52 SD	SECONDARY DISCONNECT
52 TB1	SOLENOID TERMINAL BLOCK
52 TB2	MOTOR TERMINAL BLOCK
52 Y	ANTI-PUMP RELAY
52 MR	MOTOR RELAY
52 LS	LIMIT SWITCH (MOTOR)
52 LC	LATCH CHECK SWITCH
52 M	SPRING CHARGING MOTOR
52 CC	SPRING RELEASE COIL (CLOSING COIL)
52 TC	TRIP COIL (OPENING COIL)

NOTE

1. SEE 44069-357 FOR SCHEMATIC DIAGRAM

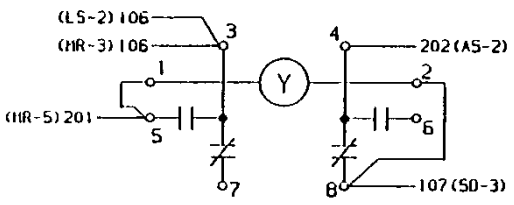

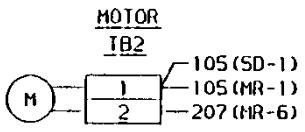

AUXILIARY SWITCH (AS)

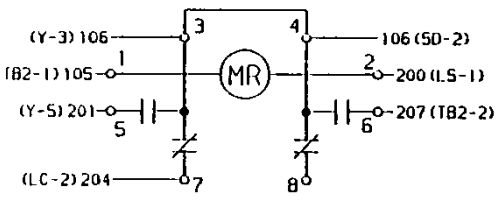

TOP CONTACTS

(SD-18) 161 — 10 / 10C — 162 (SD-19)
(SD-14) 157 — 8 / 8C — 158 (SD-15)
(SD-10) 153 — 6 / 6C — 154 (SD-11)
(SD-7) 114 — 4 / 4C — 113 (SD-6)
(Y-4) 202 — 2 / 2C — 203 (TB1-3)

BOTTOM CONTACTS

(SD-16) 159 — 9C / 9 — 160 (SD-17)
(SD-8) 151 — 7C / 7 — 152 (SD-9)
(SD-5) 110 — 5C / 5 — 206 (TB1-2)
(SD-12) 155 — 3C / 3 — 156 (SD-13)
(SD-4) 109 — 1C / 1 — 205 (TB1-1)

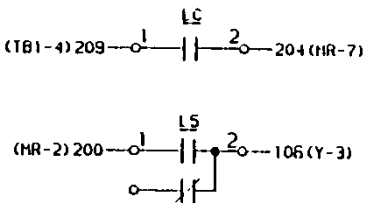

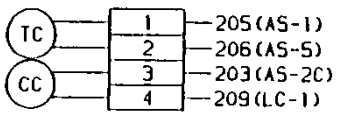

FOR CONTROL VOLTAGES

TRIP 24V, 48V, 125V DC OR 120V AC
CLOSE 48V, 125V DC OR 120V AC

△ - RELEASED IN SMYRNA

STANDARD CLEARANCE UNLESS	LINEAR DIMENSIONS	ONE PLACE DECIMAL ± .060 TWO PLACE DECIMAL ± .030 THREE PLACE DECIMAL ± .015	DESIGN LOC. 17	USED ON. VAD-2 BREAKERS WITH AMP PLUG	ECO. 2/11/91	PRINTS TO.	SQUARE D COMPANY POWER EQUIPMENT
	HOLE	PUNCHED/DRILLED ± .005	DRAWN BY. MEC CHKD BY. SPH	RAWSTOCK. NONE MATERIAL DESCRIPTION. NONE	DATE. VA21C23	TITLE. VAD-2 WIRING DIAGRAM AMP PLUG	

REV	ECO	BY	DATE
A	B1480	SPH	8/27/93

This engineering drawing (CAD / CAM or otherwise) is the proprietary property of Square D Company, not part of the public domain, and is issued with the express understanding and agreement that it is not to be reproduced or copied in whole or in part or used for furnishing information to others, or used directly or indirectly, in any way detrimental to the interests of Square D Company and is to be returned upon request by Square D Company. All Rights Reserved.

© 1991 Square D Company

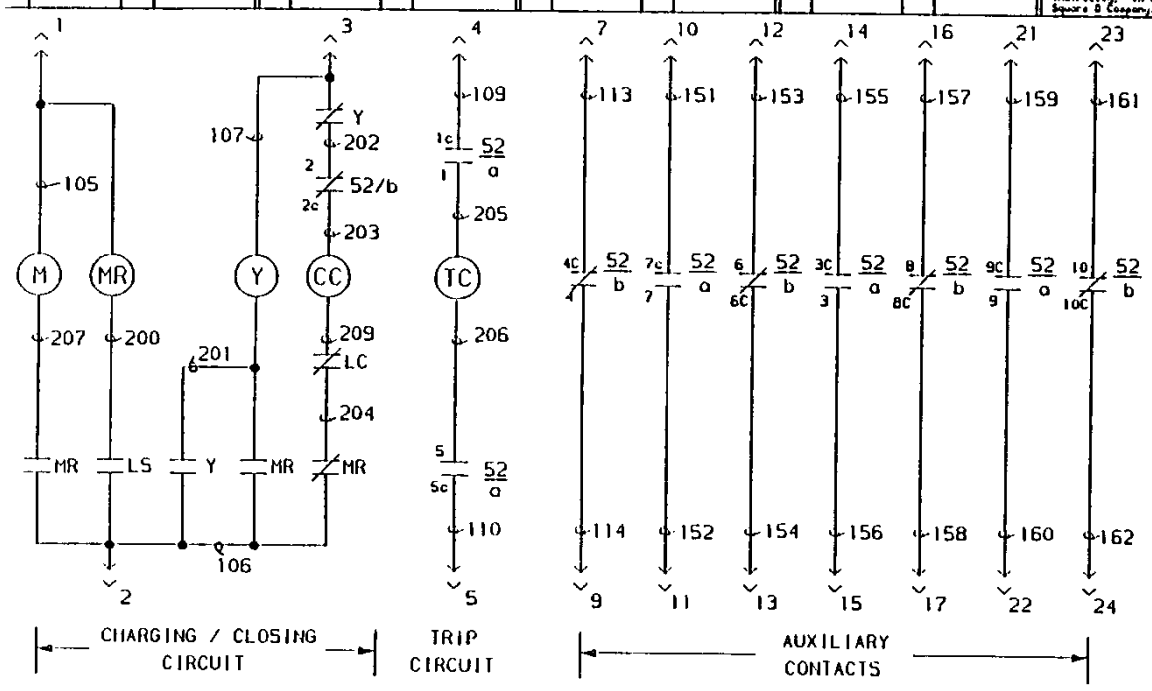

OPERATION OF BREAKER

1. THE BREAKER WILL NOT CLOSE UNTIL THE SPRINGS ARE CHARGED.
2. WHEN THE SPRINGS ARE DISCHARGED, SPRING CHARGING LIMIT SWITCH CONTACT 52/LS IS CLOSED. THIS PICKS UP THE MOTOR RELAY (52MR), WHICH ENERGIZES THE SPRING CHARGING MOTOR (52/M). 52/M RUNS UNTIL THE CLOSING SPRINGS ARE CHARGED. WHEN THE SPRINGS ARE CHARGED, 52/LS OPENS, DROPPING OUT 52MR, WHICH DE-ENERGIZES 52M.
3. WHEN 52MR DROPS OUT, THE NORMALLY CLOSED 52MR CONTACT CLOSES ALLOWING CONTINUITY IN THE CLOSING SOLENOID 52/CC CIRCUIT. IF CLOSING SIGNAL IS APPLIED, 52/CC IS ENERGIZED, UNLATCHING THE CLOSING SPRINGS, CLOSING THE BREAKER, AND CHARGING THE OPENING SPRINGS. 52/b CONTACTS OPEN, DE-ENERGIZING 52/CC. THE DISCHARGING OF THE CLOSING SPRINGS CAUSES 52/LS TO CLOSE. 52MR PICKS UP CLOSING THE NORMALLY OPEN 52MR CONTACT ALLOWING CONTINUITY IN THE ANTI-PUMP RELAY (52Y) CIRCUIT. THE 52Y CONTACTS CHANGE STATE SEALING IN 52Y AND PREVENTING 52/CC FROM BEING RE-ENERGIZED UNTIL THE CLOSING SIGNAL IS REMOVED. THIS LIMITS THE BREAKER TO ONE CLOSING OPERATION PER CLOSING SIGNAL.
4. WHEN THE BREAKER CLOSES, 52/a AUXILIARY CONTACTS CLOSE ALLOWING CONTINUITY IN THE TRIP SOLENOID (52/TC) CIRCUIT. IF A TRIPPING SIGNAL IS APPLIED, 52/TC IS ENERGIZED, UNLATCHING THE TRIPPING SPRINGS, OPENING THE BREAKER. THE 52/a CONTACTS OPEN, DE-ENERGIZING 52/TC WHILE THE BREAKER IS OPEN.
5. REMOTE STATUS INDICATORS ARE CONNECTED TO TERMINALS TO INDICATE IF THE BREAKER IS OPEN OR CLOSED. CONTACT 52/a IS CLOSED WHEN THE BREAKER IS CLOSED. CONTACT 52/b IS CLOSED WHEN THE BREAKER IS OPEN.

LEGEND

52 VACUUM CIRCUIT BREAKER
52M SPRING CHARGING MOTOR
52/LS SPRING CHARGING MOTOR LIMIT SWITCH
52/TC TRIP COIL (OPENING COIL)
52/CC SPRING RELEASE COIL (CLOSING COIL)
52Y ANTI-PUMP RELAY
52MR MOTOR RELAY
52/a AUX. SWITCH CONTACTS, OPEN WHEN BREAKER IS OPEN
52/b AUX. SWITCH CONTACTS, CLOSED WHEN BREAKER IS OPEN
52/LC LATCH CHECK SWITCH

NOTES:

1. BREAKER SHOWN IN OPEN POSITION & CLOSING SPRINGS CHARGED.
2. SEE 44069-360 FOR WIRING DIAGRAM

FOR CONTROL VOLTAGE:

TRIP 24V, 48V, 125V DC OR 120V AC
CLOSE 48V, 125V DC OR 120V AC

△ - RELEASED IN SMYRNA

STANDARD TOLERANCE UNLESS OTHERWISE	LINEAR DIMENSIONS	ONE PLACE DECIMAL ± .060 TWO PLACE DECIMAL ± .030 THREE PLACE DECIMAL ± .015	DESIGN LOC: 17	USED ON: VAD-2 BREAKERS WITH HARTING PLUG	ECO: 2/10/92	PRINTS TO: -- -- -- -- -- -- -- --	SQUARE D COMPANY POWER EQUIPMENT
	HOLE DIMENSIONS	PUNCHED/DRILLED ± .005	DRAWN BY: MEC CHKD BY: SPH	RAWSTOCK: NONE MATERIAL DESCRIPTION: NONE	DATE: VA21C23	TITLE: VAD-2 SCHEMATIC DIAGRAM HARTING PLUG	

REV	ECO	BY	DATE
A	B1480	SPH	8/27/93

This engineering drawing, CAD / CAM or otherwise is the proprietary property of Square D Company, not part of the public domain, and is issued with the express understanding that it is not to be reproduced or copied in whole or in part or used for furnishing information to others, or used directly or indirectly in any way detrimental to the interest of Square D Company and is to be returned upon request by Square D Company. ALL Rights Reserved.

© 1993 Square D Company

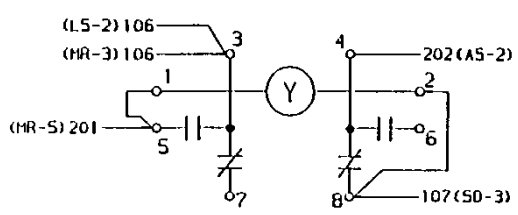

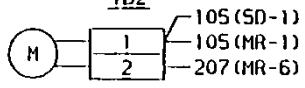

LEGEND

52 AS	AUXILIARY SWITCH
52 SD	SECONDARY DISCONNECT
52 TB1	SOLENOID TERMINAL BLOCK
52 TB2	MOTOR TERMINAL BLOCK
52 Y	ANTI-PUMP RELAY
52 MR	MOTOR RELAY
52 LS	LIMIT SWITCH (MOTOR)
52 LC	LATCH CHECK SWITCH
52 M	SPRING CHARGING MOTOR
52 CC	SPRING RELEASE COIL (CLOSING COIL)
52 TC	TRIP COIL (OPENING COIL)

NOTE

1. SEE 44069-359 FOR SCHEMATIC DIAGRAM.

SECONDARY DISCONNECT (SD)

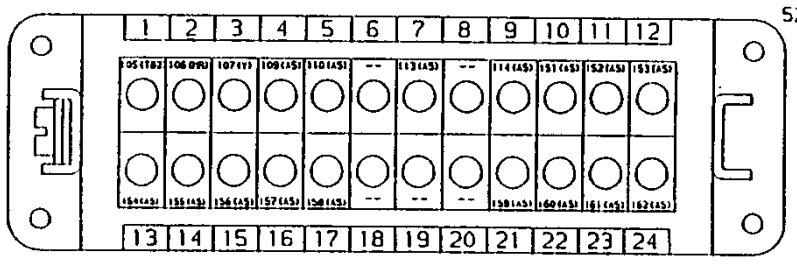

REAR VIEW OF BREAKER CONTROL PLUG

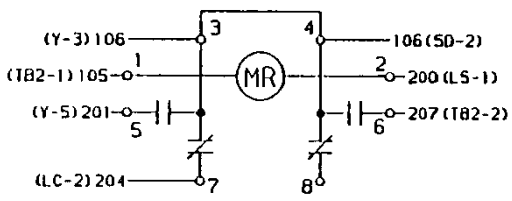

AUXILIARY SWITCH (AS)

TOP CONTACTS

(SD-23) 161 — 10 / 10C — 162 (SD-24)
(SD-16) 157 — 8 / 8C — 158 (SD-17)
(SD-12) 153 — 6 / 6C — 154 (SD-13)
(SD-9) 114 — 4 / 4C — 113 (SD-7)
(Y-4) 202 — 2 / 2C — 203 (TB1-3)

BOTTOM CONTACTS

(SD-21) 159 — 9C / 9 — 160 (SD-22)
(SD-10) 151 — 7C / 7 — 152 (SD-11)
(SD-5) 110 — 5C / 5 — 206 (TB1-2)
(SD-14) 155 — 3C / 3 — 156 (SD-15)
(SD-4) 109 — 1C / 1 — 205 (TB1-1)

SOLENOID

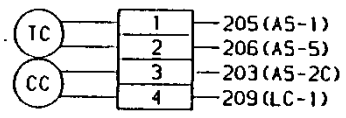

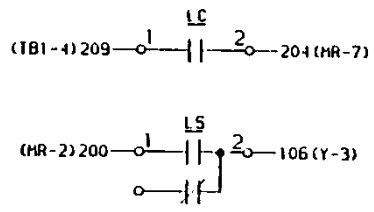

FOR CONTROL VOLTAGES

TRIP 24V, 48V, 125V DC OR 120V AC
CLOSE 48V, 125V DC OR 120V AC

A - RELEASED IN SMYRNA

STANDARD TOLERANCE UNLESS OTHERWISE	LINEAR DIMENSIONS	ONE PLACE DECIMAL ± .060 TWO PLACE DECIMAL ± .030 THREE PLACE DECIMAL ± .015	DESIGN LOC. 17	USED ON. VAD-2 BREAKERS WITH HARTING PLUG	ECO. 2/10/92	PRINTS TO.	SQUARE D COMPANY POWER EQUIPMENT
	HOLE DIMENSIONS	PUNCHED/DRILLED ± .005	DRAWN BY. MEC CHKD BY. SPH	RAWSTOCK. NONE MATERIAL DESCRIPTION. NONE	DATE. VA21C23	TITLE. VAD-2 WIRING DIAGRAM HARTING PLUG	

REV	ECO	BY	DATE
A	81480	SPH	8/27/93

This engineering drawing (CAD / CAM or otherwise) is the proprietary property of Square D Company, not part of the public domain, and is issued with the express understanding that it is not to be reproduced or copied in whole or in part or used for furnishing information to others, or used directly or indirectly, in any way inimical to the interest of Square D Company and is to be returned upon request by Square D Company. All Rights Reserved.

© 1993 Square D Company

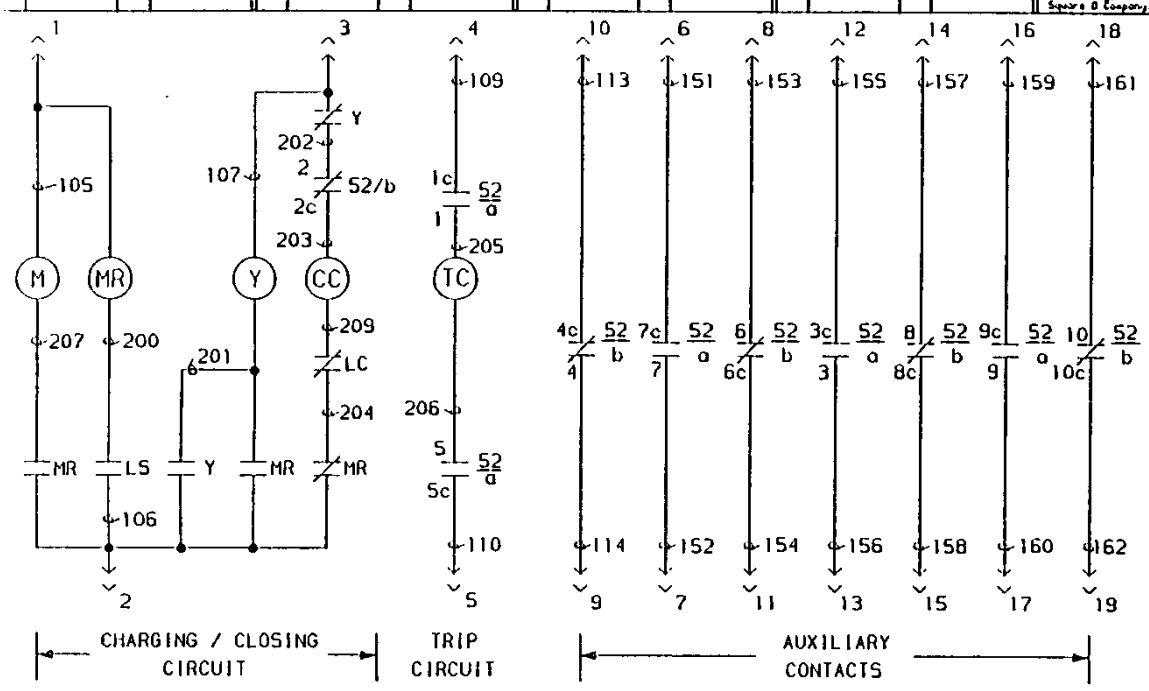

OPERATION OF BREAKER

1. THE BREAKER WILL NOT CLOSE UNTIL THE SPRINGS ARE CHARGED.
2. WHEN THE SPRINGS ARE DISCHARGED, SPRING CHARGING LIMIT SWITCH CONTACT 52/LS IS CLOSED. THIS PICKS UP THE MOTOR RELAY (52MR), WHICH ENERGIZES THE SPRING CHARGING MOTOR (52/M). 52/M RUNS UNTIL THE CLOSING SPRINGS ARE CHARGED. WHEN THE SPRINGS ARE CHARGED, 52/LS OPENS, DROPPING OUT 52MR, WHICH DE-ENERGIZES 52M.
3. WHEN 52MR DROPS OUT, THE NORMALLY CLOSED 52MR CONTACT CLOSES ALLOWING CONTINUITY IN THE CLOSING SOLENOID 52/CC CIRCUIT. IF CLOSING SIGNAL IS APPLIED, 52/CC IS ENERGIZED, UNLATCHING THE CLOSING SPRINGS, CLOSING THE BREAKER, AND CHARGING THE OPENING SPRINGS. 52/b CONTACTS OPEN, DE-ENERGIZING 52/CC. THE DISCHARGING OF THE CLOSING SPRINGS CAUSES 52/LS TO CLOSE. 52MR PICKS UP CLOSING THE NORMALLY OPEN 52MR CONTACT ALLOWING CONTINUITY IN THE ANTI-PUMP RELAY (52Y) CIRCUIT. THE 52Y CONTACTS CHANGE STATE SEALING IN 52Y AND PREVENTING 52/CC FROM BEING RE-ENERGIZED UNTIL THE CLOSING SIGNAL IS REMOVED. THIS LIMITS THE BREAKER TO ONE CLOSING OPERATION PER CLOSING SIGNAL.
4. WHEN THE BREAKER CLOSES, 52/a AUXILIARY CONTACTS CLOSE ALLOWING CONTINUITY IN THE TRIP SOLENOID (52/TC) CIRCUIT. IF A TRIPPING SIGNAL IS APPLIED, 52/TC IS ENERGIZED, UNLATCHING THE TRIPPING SPRINGS, OPENING THE BREAKER. THE 52/a CONTACTS OPEN, DE-ENERGIZING 52/TC WHILE THE BREAKER IS OPEN.
5. REMOTE STATUS INDICATORS ARE CONNECTED TO TERMINALS TO INDICATE IF THE BREAKER IS OPEN OR CLOSED. CONTACT 52/a IS CLOSED WHEN THE BREAKER IS CLOSED. CONTACT 52/b IS CLOSED WHEN THE BREAKER IS OPEN.

LEGEND

52 VACUUM CIRCUIT BREAKER
52M SPRING CHARGING MOTOR
52/LS SPRING CHARGING MOTOR LIMIT SWITCH
52/TC TRIP COIL (OPENING COIL)
52/CC SPRING RELEASE COIL (CLOSING COIL)
52Y ANTI-PUMP RELAY
52MR MOTOR RELAY
52/a AUX. SWITCH CONTACTS, OPEN WHEN BREAKER IS OPEN
52/b AUX. SWITCH CONTACTS, CLOSED WHEN BREAKER IS OPEN
52/LC LATCH CHECK SWITCH

NOTES:

1. BREAKER SHOWN IN OPEN POSITION & CLOSING SPRINGS CHARGED.
2. SEE 44069-362 FOR WIRING DIAGRAM.

FOR CONTROL VOLTAGE:

TRIP 24V, 48V, 125V DC OR 120V AC
CLOSE 48V, 125V DC OR 120V AC

⚠ - RELEASED IN SMYRNA

STANDARD TOLERANCE UNLESS OTHERWISE	LINEAR DIMENSIONS	ONE PLACE DECIMAL ± .060 TWO PLACE DECIMAL ± .030 THREE PLACE DECIMAL ± .015	DESIGN LOC: 17 DRAWN BY: MEC	USED ON: VAD-2 BREAKERS WITH MEXICO PLUG RAWSTOCK: NONE	ECO: 2/10/92 DATE: VA21C23	PRINTS TO: -- -- -- -- -- -- -- -- TITLE: VAD-2 SCHEMATIC DIAGRAM MEXICO PLUG	SQUARE D COMPANY POWER EQUIPMENT
	HOLE	PUNCHED/DRILLED ± .005	CHKD BY: SPH	MATERIAL DESCRIPTION: NONE			

REV	ECO	BY	DATE
A	81480	SPH	8/27/93

This engineering drawing (CAD / CAM or otherwise) is the proprietary property of Square D Company, not part of the public domain, and is issued with the express understanding and agreement that it is not to be reproduced or copied in whole or in part or used for furnishing information to others, or used directly or indirectly, in any way detrimental to the interest of Square D Company and is to be returned upon request by Square D Company. All Rights Reserved.

© 1989 Square D Company

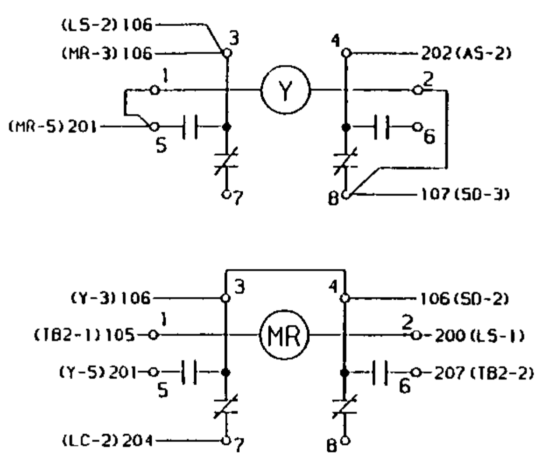

SECONDARY DISCONNECT (SD)

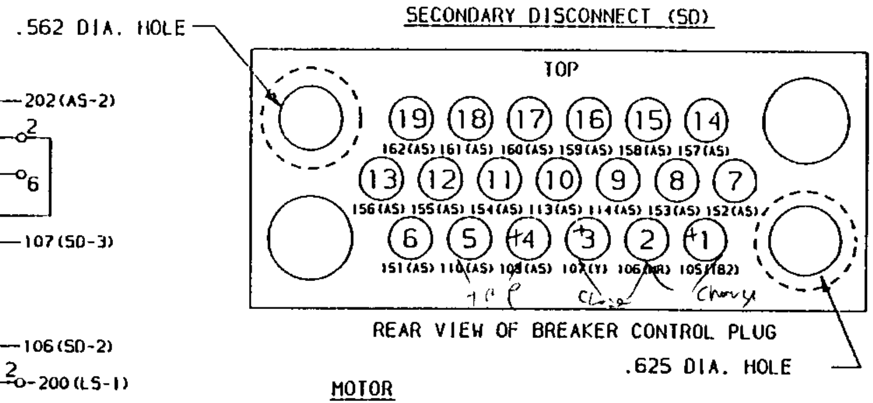

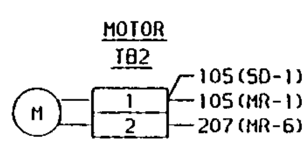

LEGEND

52 AS	AUXILIARY SWITCH
52 SD	SECONDARY DISCONNECT
52 TB1	SOLENOID TERMINAL BLOCK
52 TB2	MOTOR TERMINAL BLOCK
52 Y	ANTI-PUMP RELAY
52 MR	MOTOR RELAY
52 LS	LIMIT SWITCH (MOTOR)
52 LC	LATCH CHECK SWITCH
52 M	SPRING CHARGING MOTOR
52 CC	SPRING RELEASE COIL (CLOSING COIL)
52 TC	TRIP COIL (OPENING COIL)

NOTE

1. SEE 44069-361 FOR SCHEMATIC DIAGRAM

AUXILIARY SWITCH (AS)

TOP CONTACTS / BOTTOM CONTACTS

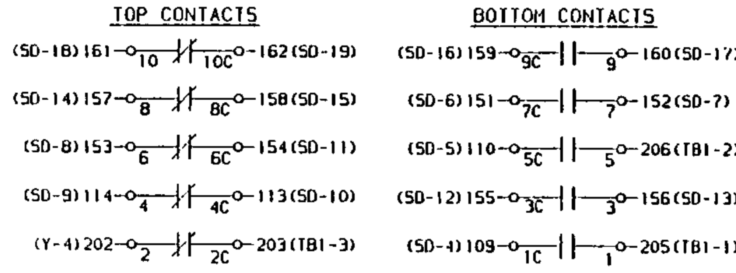

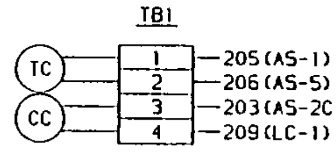

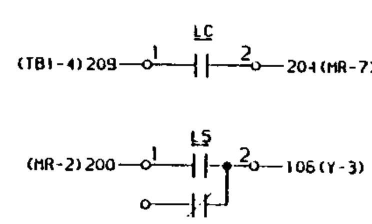

FOR CONTROL VOLTAGES

TRIP 24V, 48V, 125V DC OR 120V AC

CLOSE 48V, 125V DC OR 120V AC

A - RELEASED IN SMYRNA

STANDARD TOLERANCE UNLESS OTHERWISE	LINEAR DIMENSIONS	ONE PLACE DECIMAL	± .060
		TWO PLACE DECIMAL	± .030
		THREE PLACE DECIMAL	± .015
	HOLE DIMENSIONS	PUNCHED/DRILLED	± .005

DESIGN LOC: 17	USED ON: VAD-2 BREAKERS WITH MEXICO PLUG	ECO: 2/10/93	PRINTS TO: -- -- -- -- -- -- -- --
DRAWN BY: MEC	RAWSTOCK: NONE	DATE: VA21C23	TITLE: VAD-2 WIRING DIAGRAM MEXICO PLUG
CHKD BY: SPH	MATERIAL DESCRIPTION: NONE		

SQUARE D COMPANY
POWER EQUIPMENT

REV	ECO	BY	DATE
A	B1480	SPI	8/27/93

This engineering drawing (CAD / CAM or otherwise) is the proprietary property of Square D Company, not part of the public domain, and is issued with the express understanding and agreement that it is not to be reproduced or copied in whole or in part or used for furnishing information to others, or used directly or indirectly, in any way detrimental to the interest of Square D Company and is to be returned upon request by Square D Company. All Rights Reserved.

© 1993 Square D Company

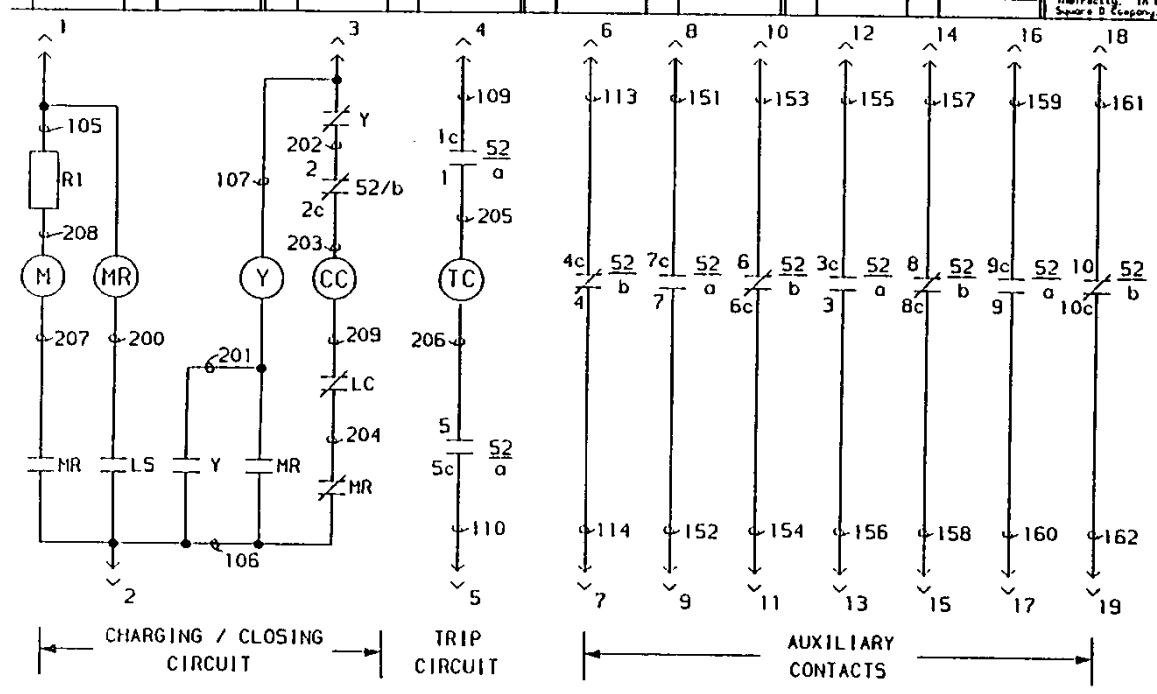

OPERATION OF BREAKER

1. THE BREAKER WILL NOT CLOSE UNTIL THE SPRINGS ARE CHARGED.
2. WHEN THE SPRINGS ARE DISCHARGED, SPRING CHARGING LIMIT SWITCH CONTACT S2/LS IS CLOSED. THIS PICKS UP THE MOTOR RELAY (S2MR), WHICH ENERGIZES THE SPRING CHARGING MOTOR (S2/M). S2/M RUNS UNTIL THE CLOSING SPRINGS ARE CHARGED. WHEN THE SPRINGS ARE CHARGED, S2/LS OPENS, DROPPING OUT S2MR, WHICH DE-ENERGIZES S2M.
3. WHEN S2MR DROPS OUT, THE NORMALLY CLOSED S2MR CONTACT CLOSES ALLOWING CONTINUITY IN THE CLOSING SOLENOID S2/CC CIRCUIT. IF CLOSING SIGNAL IS APPLIED, S2/CC IS ENERGIZED, UNLATCHING THE CLOSING SPRINGS, CLOSING THE BREAKER, AND CHARGING THE OPENING SPRINGS. S2/b CONTACTS OPEN, DE-ENERGIZING S2/CC. THE DISCHARGING OF THE CLOSING SPRINGS CAUSES S2/LS TO CLOSE. S2MR PICKS UP CLOSING THE NORMALLY OPEN S2MR CONTACT ALLOWING CONTINUITY IN THE ANTI-PUMP RELAY (S2Y) CIRCUIT. THE S2Y CONTACTS CHANGE STATE SEALING IN S2Y AND PREVENTING S2/CC FROM BEING RE-ENERGIZED UNTIL THE CLOSING SIGNAL IS REMOVED. THIS LIMITS THE BREAKER TO ONE CLOSING OPERATION PER CLOSING SIGNAL.
4. WHEN THE BREAKER CLOSES, S2/a AUXILIARY CONTACTS CLOSE ALLOWING CONTINUITY IN THE TRIP SOLENOID (S2/TC) CIRCUIT. IF A TRIPPING SIGNAL IS APPLIED, S2/TC IS ENERGIZED, UNLATCHING THE TRIPPING SPRINGS, OPENING THE BREAKER. THE S2/a CONTACTS OPEN, DE-ENERGIZING S2/TC WHILE THE BREAKER IS OPEN.
5. REMOTE STATUS INDICATORS ARE CONNECTED TO TERMINALS TO INDICATE IF THE BREAKER IS OPEN OR CLOSED. CONTACT S2/a IS CLOSED WHEN THE BREAKER IS CLOSED. CONTACT S2/b IS CLOSED WHEN THE BREAKER IS OPEN.

LEGEND

S2 VACUUM CIRCUIT BREAKER
S2M SPRING CHARGING MOTOR
S2/LS SPRING CHARGING MOTOR LIMIT SWITCH
S2/TC TRIP COIL (OPENING COIL)
S2/CC SPRING RELEASE COIL (CLOSING COIL)
S2Y ANTI-PUMP RELAY
S2MR MOTOR RELAY
S2/a AUX. SWITCH CONTACTS, OPEN WHEN BREAKER IS OPEN
S2/b AUX. SWITCH CONTACTS, CLOSED WHEN BREAKER IS OPEN
R1 MOTOR RESISTOR (120V/500W)
S2/LC LATCH CHECK SWITCH

NOTES:

1. BREAKER SHOWN IN OPEN POSITION & CLOSING SPRINGS CHARGED.
2. SEE 44069-364 FOR WIRING DIAGRAM.

FOR CONTROL VOLTAGE:

TRIP 24V, 48V, 125V DC OR 120V AC
CLOSE 250V DC OR 240V AC

A - RELEASED IN SMYRNA

STANDARD TOLERANCE UNLESS OTHERWISE	LINEAR DIMENSIONS	ONE PLACE DECIMAL ± .060 TWO PLACE DECIMAL ± .030 THREE PLACE DECIMAL ± .015	DESIGN LOC: 17	USED ON: VAD-2 BREAKERS WITH AMP PLUG	ECO: 2/10/92	PRINTS TO:	SQUARE D COMPANY POWER EQUIPMENT
	HOLE	PUNCHED/DRILLED ± .005	DRAWN BY: MEC CHKD BY: SPI	RAWSTOCK: NONE MATERIAL DESCRIPTION: NONE	DATE: VA21C23	TITLE: VAD-2 SCHEMATIC DIAGRAM AMP PLUG	

REV	ECO	BY	DATE
A	B1480	SPH	8/27/93

This engineering drawing (CAD / CAM or otherwise) is the proprietary property of Square D Company, not part of the public domain, and is issued with the express understanding and agreement that it is not to be reproduced or copied in whole or in part or used for furnishing information to others, or used directly or indirectly, in any way detrimental to the interest of Square D Company and is to be returned upon request by Square D Company. All Rights Reserved.

© 1992 Square D Company

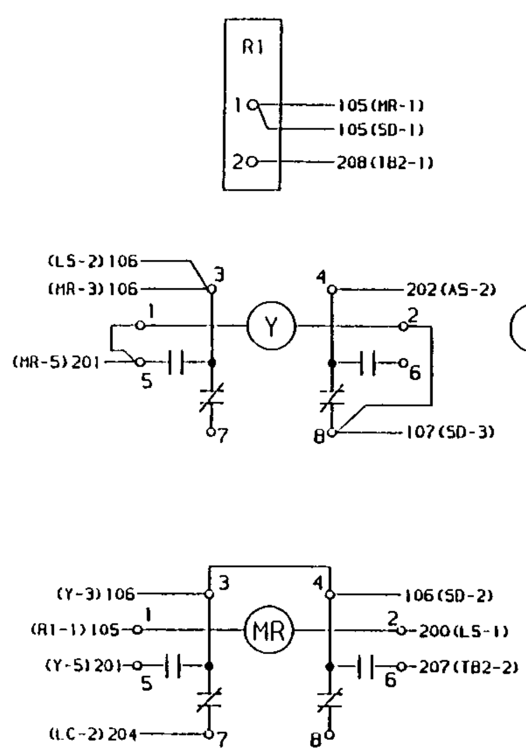

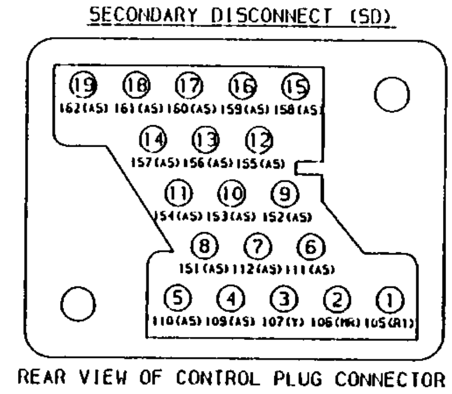

LEGEND

52 AS	AUXILIARY SWITCH
52 SD	SECONDARY DISCONNECT
52 TB1	SOLENOID TERMINAL BLOCK
52 TB2	MOTOR TERMINAL BLOCK
52 Y	ANTI-PUMP RELAY
52 MR	MOTOR RELAY
52 LS	LIMIT SWITCH (MOTOR)
52 LC	LATCH CHECK SWITCH
52 M	SPRING CHARGING MOTOR
52 CC	SPRING RELEASE COIL (CLOSING COIL)
52 TC	TRIP COIL (OPENING COIL)
52 R1	MOTOR RESISTOR (120V/500W)

NOTE

1. SEE 44069-363 FOR SCHEMATIC DIAGRAM

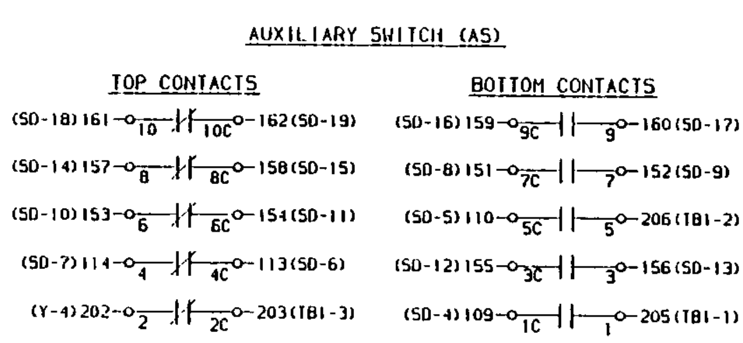

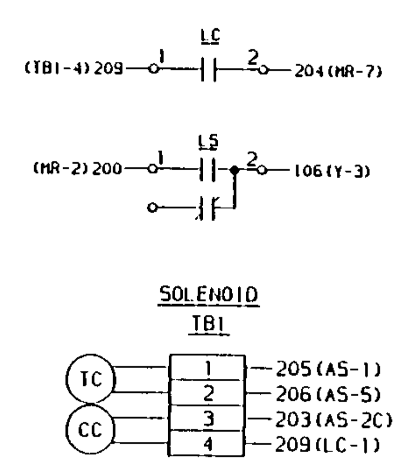

FOR CONTROL VOLTAGES

TRIP 24V, 48V, 125V DC OR 120V AC

CLOSE 250VDC OR 240VAC

(A) - RELEASED IN SMYRNA

STANDARD TOLERANCE UNLESS OTHERWISE			
LINEAR DIMENSIONS	ONE PLACE DECIMAL	± .060
	TWO PLACE DECIMAL	± .030
	THREE PLACE DECIMAL	± .015
HOLE DIMENSIONS	PUNCHED/DRILLED	± .005

DESIGN LOC. 17
DRAWN BY. MEC
CHKD BY. SPH

USED ON. VAD-2 BREAKERS WITH AMP PLUG
RAWSTOCK. NONE
MATERIAL DESCRIPTION. NONE

ECO. 2/10/92
DATE. VA21C23
PRINTS TO. -- -- -- -- -- -- -- --
TITLE. VAD-2 WIRING DIAGRAM AMP PLUG - 240/250 CLOSE

SQUARE D COMPANY
POWER EQUIPMENT

KEY	ECO	BY	DATE
A	B1480	SPH	8/27/93

This engineering drawing (CAD / CAM or otherwise) is the proprietary property of Square D Company, not part of the public domain, and is issued with the express understanding and agreement that it is not to be reproduced or copied in whole or in part or used for furnishing information to others, or used directly or indirectly, in any way detrimental to the interest of Square D Company and is to be returned upon request by Square D Company. All Rights Reserved.

© 1993 Square D Company

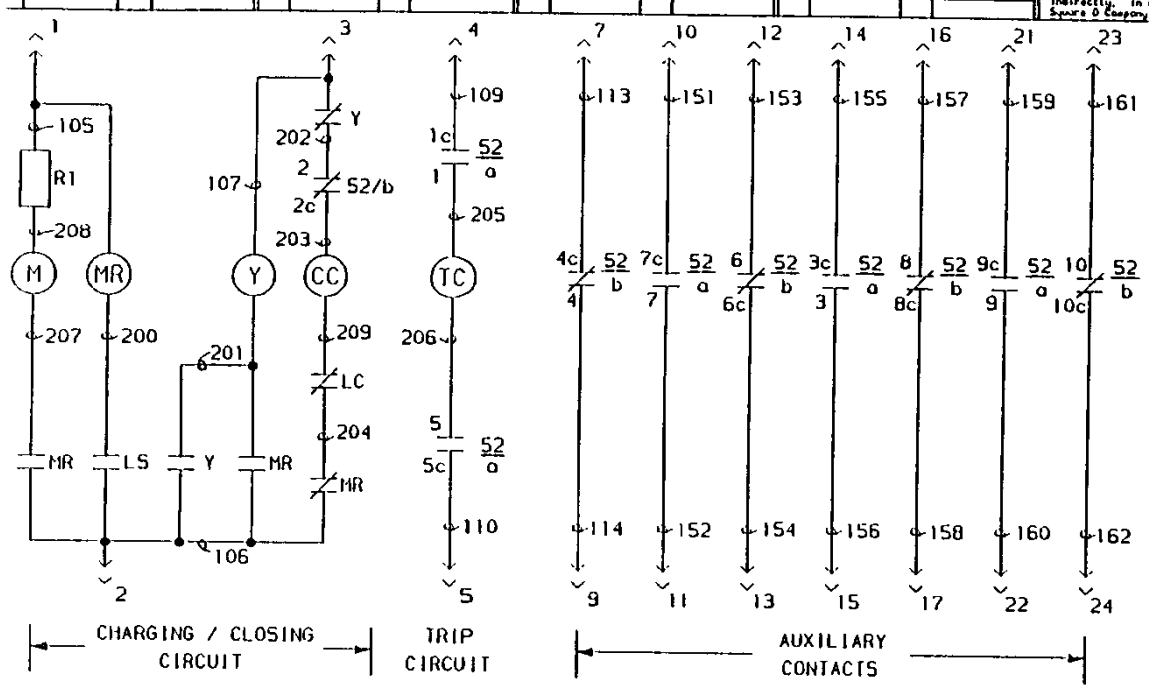

OPERATION OF BREAKER

1. THE BREAKER WILL NOT CLOSE UNTIL THE SPRINGS ARE CHARGED.
2. WHEN THE SPRINGS ARE DISCHARGED, SPRING CHARGING LIMIT SWITCH CONTACT 52/LS IS CLOSED. THIS PICKS UP THE MOTOR RELAY (52MR), WHICH ENERGIZES THE SPRING CHARGING MOTOR (52/M). 52/M RUNS UNTIL THE CLOSING SPRINGS ARE CHARGED. WHEN THE SPRINGS ARE CHARGED, 52/LS OPENS, DROPPING OUT 52MR, WHICH DE-ENERGIZES 52M.
3. WHEN 52MR DROPS OUT, THE NORMALLY CLOSED 52MR CONTACT CLOSES ALLOWING CONTINUITY IN THE CLOSING SOLENOID 52/CC CIRCUIT. IF CLOSING SIGNAL IS APPLIED, 52/CC IS ENERGIZED, UNLATCHING THE CLOSING SPRINGS, CLOSING THE BREAKER, AND CHARGING THE OPENING SPRINGS. 52/b CONTACTS OPEN, DE-ENERGIZING 52/CC. THE DISCHARGING OF THE CLOSING SPRINGS CAUSES 52/LS TO CLOSE. 52MR PICKS UP CLOSING THE NORMALLY OPEN 52MR CONTACT ALLOWING CONTINUITY IN THE ANTI-PUMP RELAY (52Y) CIRCUIT. THE 52Y CONTACTS CHANGE STATE SEALING IN 52Y AND PREVENTING 52/CC FROM BEING RE-ENERGIZED UNTIL THE CLOSING SIGNAL IS REMOVED. THIS LIMITS THE BREAKER TO ONE CLOSING OPERATION PER CLOSING SIGNAL.
4. WHEN THE BREAKER CLOSES, 52/a AUXILIARY CONTACTS CLOSE ALLOWING CONTINUITY IN THE TRIP SOLENOID (52/TC) CIRCUIT. IF A TRIPPING SIGNAL IS APPLIED, 52/TC IS ENERGIZED, UNLATCHING THE TRIPPING SPRINGS, OPENING THE BREAKER. THE 52/a CONTACTS OPEN, DE-ENERGIZING 52/TC WHILE THE BREAKER IS OPEN.
5. REMOTE STATUS INDICATORS ARE CONNECTED TO TERMINALS TO INDICATE IF THE BREAKER IS OPEN OR CLOSED. CONTACT 52/a IS CLOSED WHEN THE BREAKER IS CLOSED. CONTACT 52/b IS CLOSED WHEN THE BREAKER IS OPEN.

NOTES:

1. BREAKER SHOWN IN OPEN POSITION & CLOSING SPRINGS CHARGED.
2. SEE 44069-366-50 FOR MAIN DIAGRAM

LEGEND

52 VACUUM CIRCUIT BREAKER
52M SPRING CHARGING MOTOR
52/LS SPRING CHARGING MOTOR LIMIT SWITCH
52/TC TRIP COIL (OPENING COIL)
52/CC SPRING RELEASE COIL (CLOSING COIL)
52Y ANTI-PUMP RELAY
52MR MOTOR RELAY
52/a AUX. SWITCH CONTACTS, OPEN WHEN BREAKER IS OPEN
52/b AUX. SWITCH CONTACTS, CLOSED WHEN BREAKER IS OPEN
R1 MOTOR RESISTOR (120V/500W)
52/LC LATCH CHECK SWITCH

FOR CONTROL VOLTAGE:

TRIP 24V, 48V, 125V DC OR 120V AC
CLOSE 250VDC OR 240VAC

⚠ - RELEASED IN SHYRNA

STANDARD TOLERANCE UNLESS OTHERWISE	LINEAR DIMENSIONS	ONE PLACE DECIMAL ± .060 TWO PLACE DECIMAL ± .030 THREE PLACE DECIMAL ± .015	DESIGN LOC: 17	USED ON: VAD-2 BREAKERS WITH HARTING PLUG	ECO: 2/10/92	PRINTS TO:	SQUARE D COMPANY POWER EQUIPMENT
	HOLE DIMENSIONS	PUNCHED/DRILLED ± .005	DRAWN BY: MEC CHKD BY: SPH	RAWSTOCK: NONE MATERIAL DESCRIPTION: NONE	DATE: VA21C23	TITLE: VAD-2 SCHEMATIC DIAGRAM HARTING PLUG - 240/250 CLOSE	

REV	ECO	BY	DATE
A	B1480	SPH	8/27/93

This engineering drawing (CAD / CAM or otherwise) is the proprietary property of Square D Company, not part of the public domain, and is issued with the express understanding that it is not to be reproduced or copied in whole or in part or used for furnishing information to others, or used directly or indirectly, in any way detrimental to the interest of Square D Company and is to be returned upon request by Square D Company. All Rights Reserved.

© 1993 Square D Company

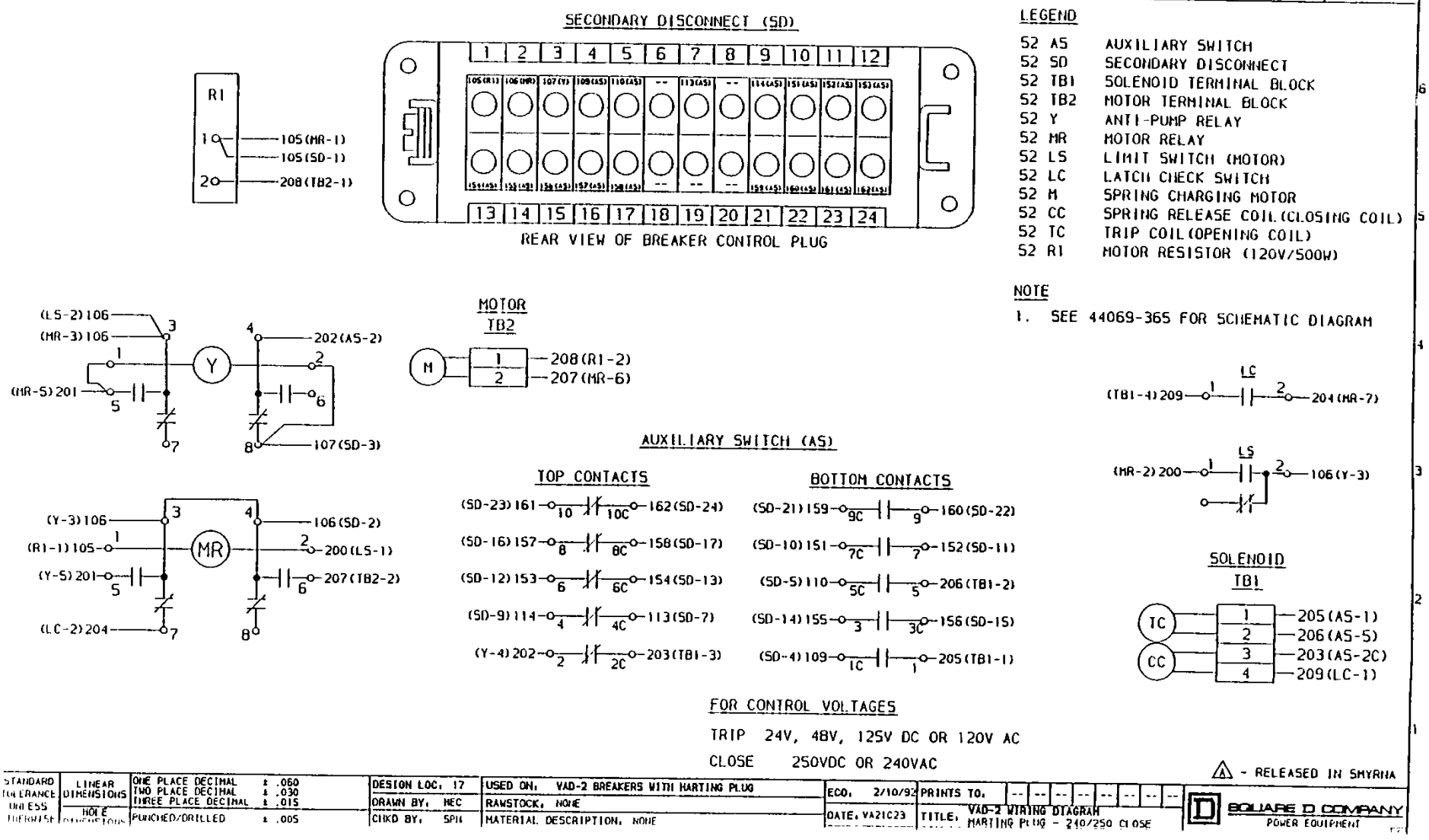

LEGEND

52 AS	AUXILIARY SWITCH
52 SD	SECONDARY DISCONNECT
52 TB1	SOLENOID TERMINAL BLOCK
52 TB2	MOTOR TERMINAL BLOCK
52 Y	ANTI-PUMP RELAY
52 MR	MOTOR RELAY
52 LS	LIMIT SWITCH (MOTOR)
52 LC	LATCH CHECK SWITCH
52 M	SPRING CHARGING MOTOR
52 CC	SPRING RELEASE COIL (CLOSING COIL)
52 TC	TRIP COIL (OPENING COIL)
52 R1	MOTOR RESISTOR (120V/500W)

NOTE

1. SEE 44069-365 FOR SCHEMATIC DIAGRAM

FOR CONTROL VOLTAGES

TRIP 24V, 48V, 125V DC OR 120V AC

CLOSE 250VDC OR 240VAC

⚠ - RELEASED IN SMYRNA

STANDARD TOLERANCE UNLESS OTHERWISE	LINEAR DIMENSIONS	ONE PLACE DECIMAL ± .060 TWO PLACE DECIMAL ± .030 THREE PLACE DECIMAL ± .015	DESIGN LOC. 17
	HOLE DIMENSIONS	PUNCHED/DRILLED ± .005	DRAWN BY. MEC CHKD BY. SPH

USED ON. VAD-2 BREAKERS WITH HARTING PLUG
RAWSTOCK. NONE
MATERIAL DESCRIPTION. NONE

ECO. 2/10/93 PRINTS TO. -- -- -- -- -- -- -- --
DATE. VA21C23 TITLE. VAD-2 WIRING DIAGRAM HARTING PLUG - 240/250 CLOSE

SQUARE D COMPANY
POWER EQUIPMENT

REV	ECO	BY	DATE
A	B1480	SPI	8/27/93

This engineering drawing (CIB / (AN or otherwise) is the proprietary property of Square D Company, not part of the public domain, and is issued with the express understanding and agreement that it is not to be reproduced or copied in whole or in part or used for furnishing information to others, or used directly or indirectly, in any way detrimental to the interest of Square D Company and is to be returned upon request by Square D Company. All Rights Reserved.

© [illegible] Square D Company

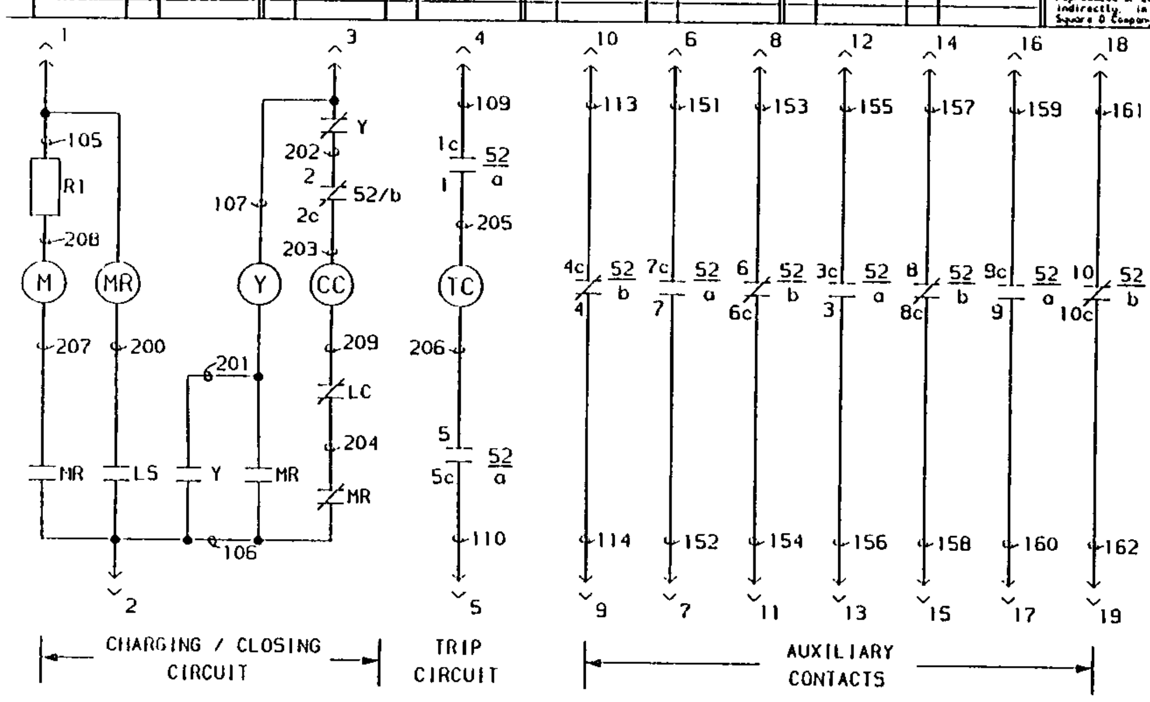

OPERATION OF BREAKER

1. THE BREAKER WILL NOT CLOSE UNTIL THE SPRINGS ARE CHARGED.
2. WHEN THE SPRINGS ARE DISCHARGED, SPRING CHARGING LIMIT SWITCH CONTACT 52/LS IS CLOSED. THIS PICKS UP THE MOTOR RELAY (52MR), WHICH ENERGIZES THE SPRING CHARGING MOTOR (52/M). 52/M RUNS UNTIL THE CLOSING SPRINGS ARE CHARGED. WHEN THE SPRINGS ARE CHARGED, 52/LS OPENS, DROPPING OUT 52MR, WHICH DE-ENERGIZES 52M.
3. WHEN 52MR DROPS OUT, THE NORMALLY CLOSED 52MR CONTACT CLOSES ALLOWING CONTINUITY IN THE CLOSING SOLENOID 52/CC CIRCUIT. IF CLOSING SIGNAL IS APPLIED, 52/CC IS ENERGIZED, UNLATCHING THE CLOSING SPRINGS, CLOSING THE BREAKER, AND CHARGING THE OPENING SPRINGS. 52/b CONTACTS OPEN, DE-ENERGIZING 52/CC. THE DISCHARGING OF THE CLOSING SPRINGS CAUSES 52/LS TO CLOSE. 52MR PICKS UP CLOSING THE NORMALLY OPEN 52MR CONTACT ALLOWING CONTINUITY IN THE ANTI-PUMP RELAY (52Y) CIRCUIT. THE 52Y CONTACTS CHANGE STATE SEALING IN 52Y AND PREVENTING 52/CC FROM BEING RE-ENERGIZED UNTIL THE CLOSING SIGNAL IS REMOVED. THIS LIMITS THE BREAKER TO ONE CLOSING OPERATION PER CLOSING SIGNAL.
4. WHEN THE BREAKER CLOSES, 52/a AUXILIARY CONTACTS CLOSE ALLOWING CONTINUITY IN THE TRIP SOLENOID (52/TC) CIRCUIT. IF A TRIPPING SIGNAL IS APPLIED, 52/TC IS ENERGIZED, UNLATCHING THE TRIPPING SPRINGS, OPENING THE BREAKER. THE 52/a CONTACTS OPEN, DE-ENERGIZING 52/TC WHILE THE BREAKER IS OPEN.
5. REMOTE STATUS INDICATORS ARE CONNECTED TO TERMINALS TO INDICATE IF THE BREAKER IS OPEN OR CLOSED. CONTACT 52/a IS CLOSED WHEN THE BREAKER IS CLOSED. CONTACT 52/b IS CLOSED WHEN THE BREAKER IS OPEN.

NOTES:

1. BREAKER SHOWN IN OPEN POSITION & CLOSING SPRINGS CHARGED.
2. SEE 44069-368 FOR WIRING DIAGRAM.

FOR CONTROL VOLTAGE:

TRIP 24V, 48V, 125V DC OR 120V AC
CLOSE - 250VDC OR 240VAC

LEGEND

52 VACUUM CIRCUIT BREAKER
52M SPRING CHARGING MOTOR
52/LS SPRING CHARGING MOTOR LIMIT SWITCH
52/TC TRIP COIL (OPENING COIL)
52/CC SPRING RELEASE COIL (CLOSING COIL)
52Y ANTI-PUMP RELAY
52MR MOTOR RELAY
52/a AUX. SWITCH CONTACTS, OPEN WHEN BREAKER IS OPEN
52/b AUX. SWITCH CONTACTS, CLOSED WHEN BREAKER IS OPEN
R1 MOTOR RESISTOR (120V/500W)
52/LC LATCH CHECK SWITCH

⚠ - RELEASED IN SMYRNA

STANDARD TOLERANCE UNLESS OTHERWISE	LINEAR DIMENSIONS	ONE PLACE DECIMAL ± .060 TWO PLACE DECIMAL ± .030 THREE PLACE DECIMAL ± .015	DESIGN LOC. 17	USED ON: VAD-2 BREAKERS WITH MEXICO PLUG	ECO: 2/10/92	PRINTS TO: -- -- -- -- -- -- -- --
			DRAWN BY: MEC	RAWSTOCK: NONE		
	HOLE	PUNCHED/DRILLED ± .005	CHKD BY: SPH	MATERIAL DESCRIPTION: NONE	DATE: VA21C23	TITLE: VAD-2 SCHEMATIC DIAGRAM MEXICO PLUG - 240/250 CLOSE

SQUARE D COMPANY
POWER EQUIPMENT

REV	ECO	BY	DATE
A	B1480	SPH	8/27/93

This engineering drawing (CAD/CAM or otherwise) is the proprietary property of Square D Company, not part of the public domain, and is issued with the express understanding that it is not to be reproduced or copied in whole or in part or used for furnishing information to others, or used directly or indirectly, in any way detrimental to the interest of Square D Company and is to be returned upon request by Square D Company. All Rights Reserved.

© 1991 Square D Company

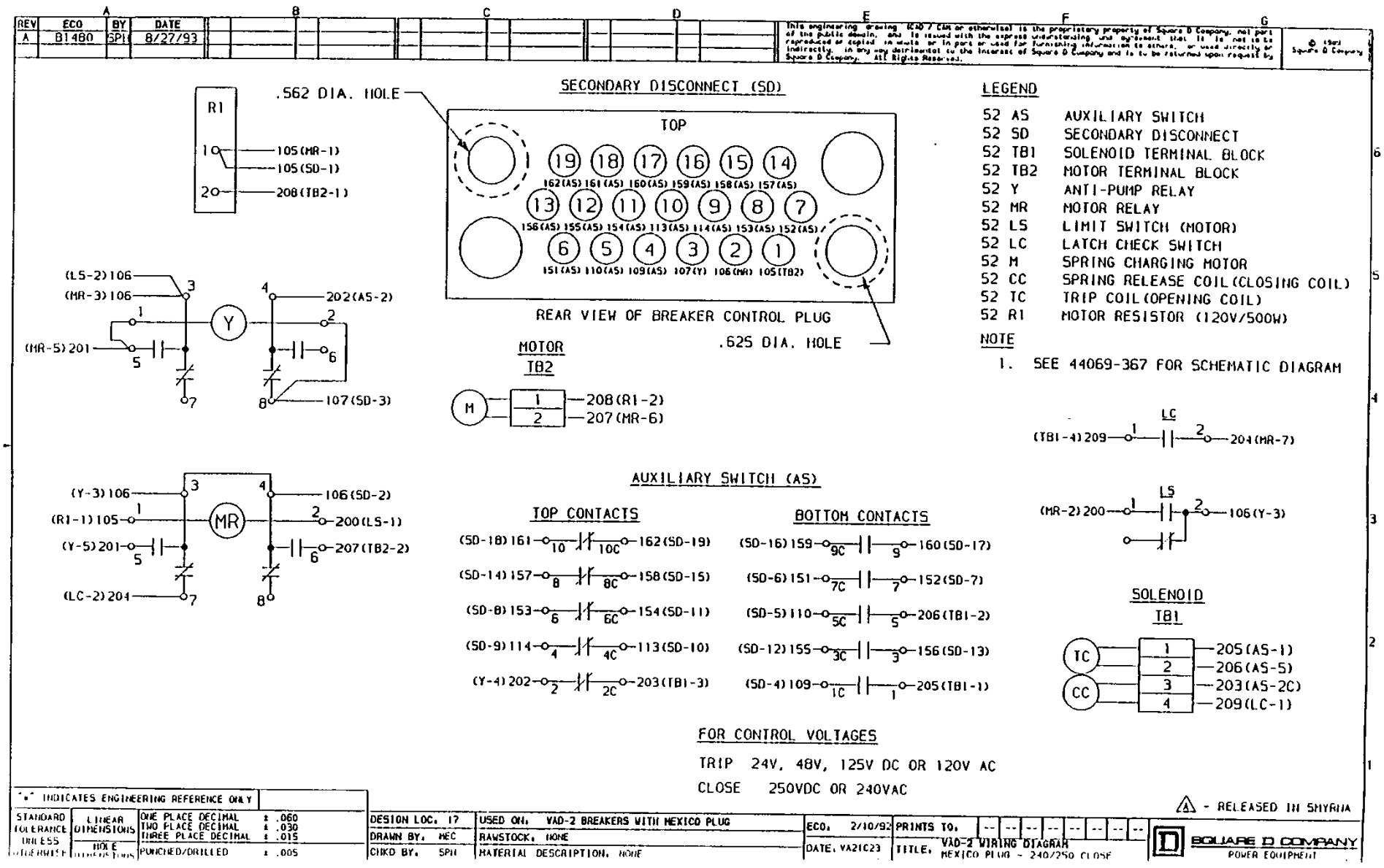

LEGEND

52 AS	AUXILIARY SWITCH
52 SD	SECONDARY DISCONNECT
52 TB1	SOLENOID TERMINAL BLOCK
52 TB2	MOTOR TERMINAL BLOCK
52 Y	ANTI-PUMP RELAY
52 MR	MOTOR RELAY
52 LS	LIMIT SWITCH (MOTOR)
52 LC	LATCH CHECK SWITCH
52 M	SPRING CHARGING MOTOR
52 CC	SPRING RELEASE COIL (CLOSING COIL)
52 TC	TRIP COIL (OPENING COIL)
52 R1	MOTOR RESISTOR (120V/500W)

NOTE

1. SEE 44069-367 FOR SCHEMATIC DIAGRAM

FOR CONTROL VOLTAGES

TRIP 24V, 48V, 125V DC OR 120V AC

CLOSE 250VDC OR 240VAC

⚠ - RELEASED IN SHYRIA

"*" INDICATES ENGINEERING REFERENCE ONLY

STANDARD TOLERANCE UNLESS OTHERWISE	LINEAR DIMENSIONS	ONE PLACE DECIMAL ± .060
		TWO PLACE DECIMAL ± .030
		THREE PLACE DECIMAL ± .015
	HOLE DIMENSIONS	PUNCHED/DRILLED ± .005

DESIGN LOC. 17 | USED ON. VAD-2 BREAKERS WITH MEXICO PLUG | ECO. 2/10/92 | PRINTS TO. -- -- -- -- -- -- -- --

DRAWN BY. MEC | RAWSTOCK. NONE | DATE. VA21C23 | TITLE. VAD-2 WIRING DIAGRAM MEXICO PLUG - 240/250 CLOSE

CHKD BY. SPH | MATERIAL DESCRIPTION. NONE

SQUARE D COMPANY
POWER EQUIPMENT

REV	ECO	BY	DATE
A	B1480	SPH	8/27/93

This engineering drawing (CAD / CAM or otherwise) is the proprietary property of Square D Company, not part of the public domain, and is issued with the express understanding that it is not to be reproduced or copied in whole or in part or used for furnishing information to others, or used directly or indirectly, in any way detrimental to the interest of Square D Company and is to be returned upon request by Square D Company. All Rights Reserved.

© 1993 Square D Company

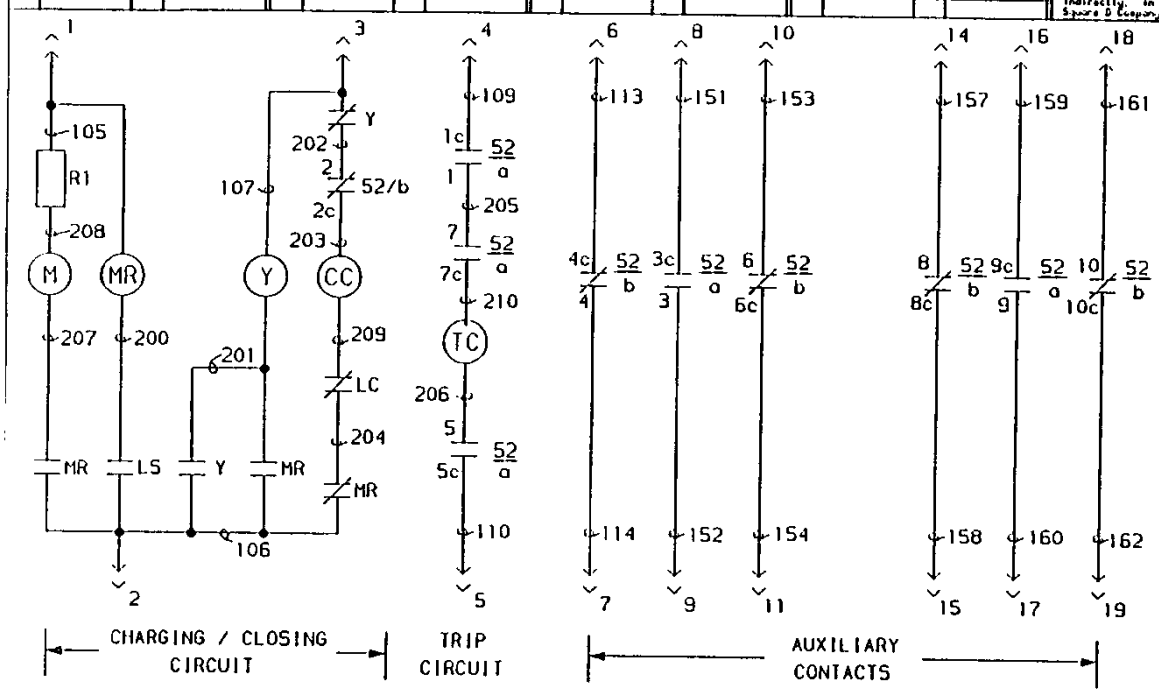

OPERATION OF BREAKER

1. THE BREAKER WILL NOT CLOSE UNTIL THE SPRINGS ARE CHARGED.
2. WHEN THE SPRINGS ARE DISCHARGED, SPRING CHARGING LIMIT SWITCH CONTACT 52/LS IS CLOSED. THIS PICKS UP THE MOTOR RELAY (52MR), WHICH ENERGIZES THE SPRING CHARGING MOTOR (52/M). 52/M RUNS UNTIL THE CLOSING SPRINGS ARE CHARGED. WHEN THE SPRINGS ARE CHARGED, 52/LS OPENS, DROPPING OUT 52MR, WHICH DE-ENERGIZES 52M.
3. WHEN 52MR DROPS OUT, THE NORMALLY CLOSED 52MR CONTACT CLOSES ALLOWING CONTINUITY IN THE CLOSING SOLENOID 52/CC CIRCUIT. IF CLOSING SIGNAL IS APPLIED, 52/CC IS ENERGIZED, UNLATCHING THE CLOSING SPRINGS, CLOSING THE BREAKER, AND CHARGING THE OPENING SPRINGS. 52/b CONTACTS OPEN, DE-ENERGIZING 52/CC. THE DISCHARGING OF THE CLOSING SPRINGS CAUSES 52/LS TO CLOSE. 52MR PICKS UP CLOSING THE NORMALLY OPEN 52MR CONTACT ALLOWING CONTINUITY IN THE ANTI-PUMP RELAY (52Y) CIRCUIT. THE 52Y CONTACTS CHANGE STATE SEALING IN 52Y AND PREVENTING 52/CC FROM BEING RE-ENERGIZED UNTIL THE CLOSING SIGNAL IS REMOVED. THIS LIMITS THE BREAKER TO ONE CLOSING OPERATION PER CLOSING SIGNAL.
4. WHEN THE BREAKER CLOSES, 52/a AUXILIARY CONTACTS CLOSE ALLOWING CONTINUITY IN THE TRIP SOLENOID (52/TC) CIRCUIT. IF A TRIPPING SIGNAL IS APPLIED, 52/TC IS ENERGIZED, UNLATCHING THE TRIPPING SPRINGS, OPENING THE BREAKER. THE 52/a CONTACTS OPEN, DE-ENERGIZING 52/TC WHILE THE BREAKER IS OPEN.
5. REMOTE STATUS INDICATORS ARE CONNECTED TO TERMINALS TO INDICATE IF THE BREAKER IS OPEN OR CLOSED. CONTACT 52/a IS CLOSED WHEN THE BREAKER IS CLOSED. CONTACT 52/b IS CLOSED WHEN THE BREAKER IS OPEN.

LEGEND

52 VACUUM CIRCUIT BREAKER
52M SPRING CHARGING MOTOR
52/LS SPRING CHARGING MOTOR LIMIT SWITCH
52/TC TRIP COIL (OPENING COIL)
52/CC SPRING RELEASE COIL (CLOSING COIL)
52Y ANTI-PUMP RELAY
52MR MOTOR RELAY
52/a AUX. SWITCH CONTACTS, OPEN WHEN BREAKER IS OPEN
52/b AUX. SWITCH CONTACTS, CLOSED WHEN BREAKER IS OPEN
52/LC LATCH CHECK SWITCH
R1 MOTOR RESISTOR (120V/500W)

NOTES:

1. BREAKER SHOWN IN OPEN POSITION & CLOSING SPRINGS CHARGED.
2. SEE 44069-370 FOR WIRING DIAGRAM

FOR CONTROL VOLTAGE:

TRIP 250 VDC OR 240 VAC
CLOSE 250 VDC OR 240 VAC

△A - RELEASED IN SHYRNA

STANDARD TOLERANCE UNLESS OTHERWISE	LINEAR DIMENSIONS	ONE PLACE DECIMAL ± .060	DESIGN LOC: 17	USED ON: VAD-2 BREAKERS WITH AMP PLUG	ECO: 2/10/92	PRINTS TO:	SQUARE D COMPANY POWER EQUIPMENT
		TWO PLACE DECIMAL ± .030	DRAWN BY: MEC	RAWSTOCK: NONE	DATE: VA21C23	TITLE: VAD-2 SCHEMATIC DIAGRAM AMP PLUG - 250/240 OPEN & CLOSE	
		THREE PLACE DECIMAL ± .015	CHKD BY: SPH	MATERIAL DESCRIPTION: NONE			
	HOLE DIMENSIONS	PUNCHED/DRILLED ± .005					

REV	ECO	BY	DATE
A	B1480	SPH	8/27/93

This engineering drawing (CAD / CAM or otherwise) is the proprietary property of Square D Company, not part of the public domain, and is issued with the express understanding and agreement that it is not to be reproduced or copied in whole or in part or used for furnishing information to others, or used directly or indirectly, in any way detrimental to the interest of Square D Company and is to be returned upon request by Square D Company. All Rights Reserved.

© 19?? Square D Company

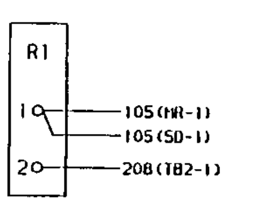

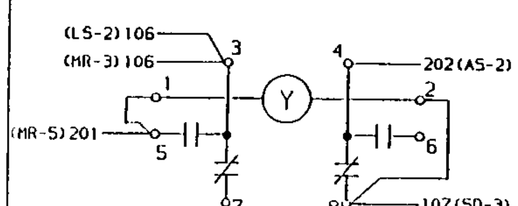

MOTOR
TB2

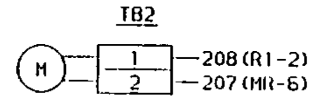

SECONDARY DISCONNECT (SD)

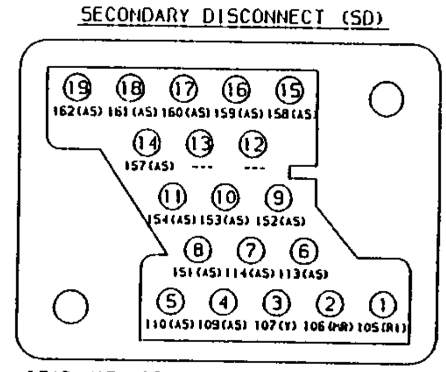

REAR VIEW OF CONTROL PLUG CONNECTOR

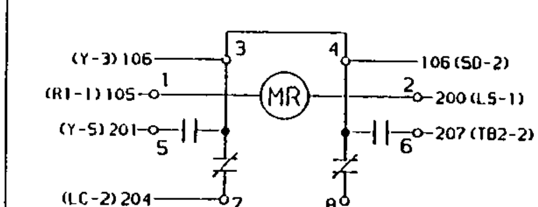

AUXILIARY SWITCH (AS)

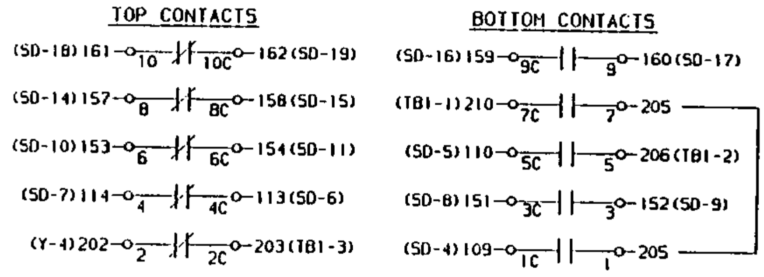

FOR CONTROL VOLTAGES

TRIP 250VDC OR 240VAC

CLOSE 250VDC OR 240VAC

LEGEND

52 AS	AUXILIARY SWITCH
52 SD	SECONDARY DISCONNECT
52 TB1	SOLENOID TERMINAL BLOCK
52 TB2	MOTOR TERMINAL BLOCK
52 Y	ANTI-PUMP RELAY
52 MR	MOTOR RELAY
52 LS	LIMIT SWITCH (MOTOR)
52 LC	LATCH CHECK SWITCH
52 M	SPRING CHARGING MOTOR
52 CC	SPRING RELEASE COIL (CLOSING COIL)
52 TC	TRIP COIL (OPENING COIL)
52 R1	MOTOR RESISTOR (120V/500W)

NOTE

1. SEE 44069-369 FOR SCHEMATIC DIAGRAM.

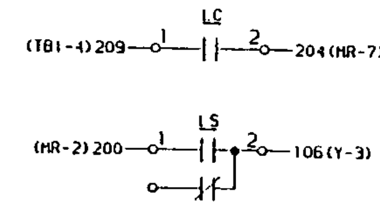

SOLENOID
TB1

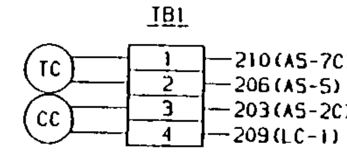

A - RELEASED IN SMYRNA

STANDARD TOLERANCE UNLESS OTHERWISE	LINEAR DIMENSIONS	ONE PLACE DECIMAL	± .060
		TWO PLACE DECIMAL	± .030
		THREE PLACE DECIMAL	± .015
	HOLE DIMENSIONS	PUNCHED/DRILLED	± .005

DESIGN LOC. 17
DRAWN BY. MEC
CHKD BY. SPH

USED ON. VAD-2 BREAKERS WITH AMP PLUG
RAWSTOCK. NONE
MATERIAL DESCRIPTION. NONE

ECO. 2/10/92
DATE. VA21C23

PRINTS TO. -- -- -- -- -- -- -- --

TITLE. VAD-2 WIRING DIAGRAM AMP PLUG - 250/240 OPEN & CLOSE

SQUARE D COMPANY
POWER EQUIPMENT

REV	ECO	BY	DATE
A	B1480	SPH	8/27/93

This engineering drawing (CAD / CAM or otherwise) is the proprietary property of Square D Company, not part of the public domain, and is issued with the express understanding and agreement that it is not to be reproduced or copied in whole or in part or used for furnishing information to others, or used directly or indirectly, in any way detrimental to the interest of Square D Company and is to be returned upon request by Square D Company. ALL Rights Reserved.

© 1993 Square D Company

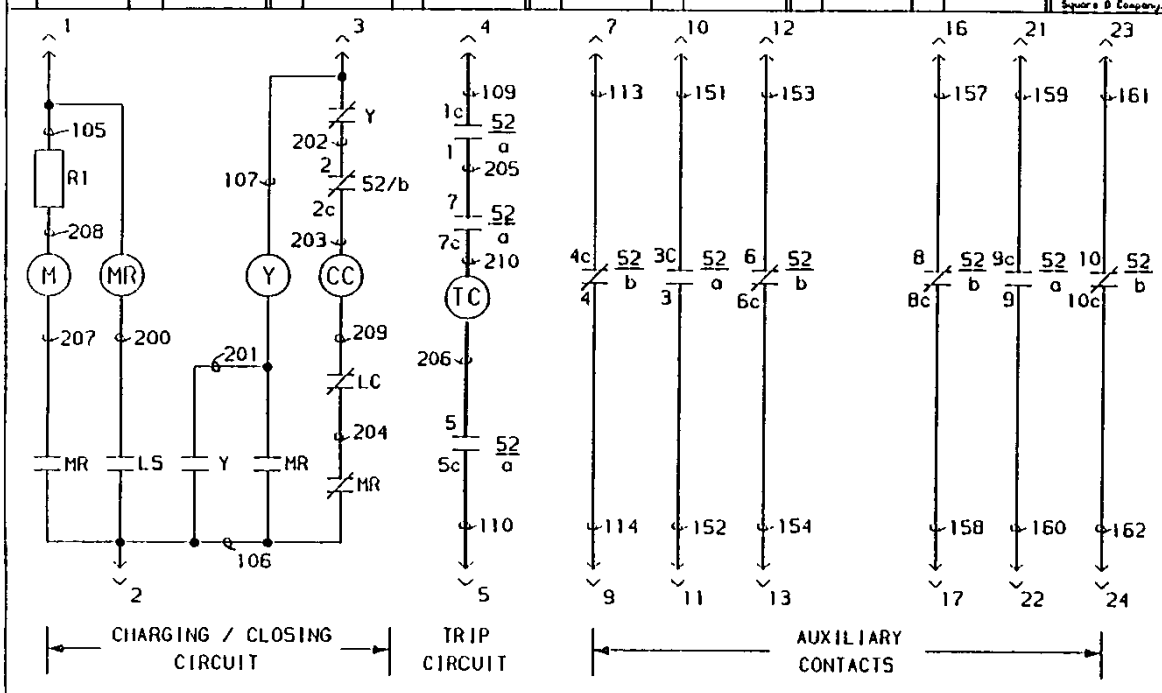

OPERATION OF BREAKER

1. THE BREAKER WILL NOT CLOSE UNTIL THE SPRINGS ARE CHARGED.
2. WHEN THE SPRINGS ARE DISCHARGED, SPRING CHARGING LIMIT SWITCH CONTACT 52/LS IS CLOSED. THIS PICKS UP THE MOTOR RELAY (52MR), WHICH ENERGIZES THE SPRING CHARGING MOTOR (52/M). 52/M RUNS UNTIL THE CLOSING SPRINGS ARE CHARGED. WHEN THE SPRINGS ARE CHARGED, 52/LS OPENS, DROPPING OUT 52MR, WHICH DE-ENERGIZES 52M.
3. WHEN 52MR DROPS OUT, THE NORMALLY CLOSED 52MR CONTACT CLOSES ALLOWING CONTINUITY IN THE CLOSING SOLENOID 52/CC CIRCUIT. IF CLOSING SIGNAL IS APPLIED, 52/CC IS ENERGIZED, UNLATCHING THE CLOSING SPRINGS, CLOSING THE BREAKER, AND CHARGING THE OPENING SPRINGS. 52/b CONTACTS OPEN, DE-ENERGIZING 52/CC. THE DISCHARGING OF THE CLOSING SPRINGS CAUSES 52/LS TO CLOSE. 52MR PICKS UP CLOSING THE NORMALLY OPEN 52MR CONTACT ALLOWING CONTINUITY IN THE ANTI-PUMP RELAY (52Y) CIRCUIT. THE 52Y CONTACTS CHANGE STATE SEALING IN 52Y AND PREVENTING 52/CC FROM BEING RE-ENERGIZED UNTIL THE CLOSING SIGNAL IS REMOVED. THIS LIMITS THE BREAKER TO ONE CLOSING OPERATION PER CLOSING SIGNAL.
4. WHEN THE BREAKER CLOSES, 52/a AUXILIARY CONTACTS CLOSE ALLOWING CONTINUITY IN THE TRIP SOLENOID (52/TC) CIRCUIT. IF A TRIPPING SIGNAL IS APPLIED, 52/TC IS ENERGIZED, UNLATCHING THE TRIPPING SPRINGS, OPENING THE BREAKER. THE 52/a CONTACTS OPEN, DE-ENERGIZING 52/TC WHILE THE BREAKER IS OPEN.
5. REMOTE STATUS INDICATORS ARE CONNECTED TO TERMINALS TO INDICATE IF THE BREAKER IS OPEN OR CLOSED. CONTACT 52/a IS CLOSED WHEN THE BREAKER IS CLOSED. CONTACT 52/b IS CLOSED WHEN THE BREAKER IS OPEN.

LEGEND

52 VACUUM CIRCUIT BREAKER
52M SPRING CHARGING MOTOR
52/LS SPRING CHARGING MOTOR LIMIT SWITCH
52/TC TRIP COIL (OPENING COIL)
52/CC SPRING RELEASE COIL (CLOSING COIL)
52Y ANTI-PUMP RELAY
52MR MOTOR RELAY
52/a AUX. SWITCH CONTACTS, OPEN WHEN BREAKER IS OPEN
52/b AUX. SWITCH CONTACTS, CLOSED WHEN BREAKER IS OPEN
R1 MOTOR RESISTOR (120V/500W)
52/LC LATCH CHECK SWITCH

NOTES:

1. BREAKER SHOWN IN OPEN POSITION & CLOSING SPRINGS CHARGED.
2. SEE 44069-372 FOR WIRING DIAGRAM

FOR CONTROL VOLTAGE:

TRIP 250 VDC OR 240 VAC
CLOSE 250 VDC OR 240 VAC

△A - RELEASED IN SMYRNA

STANDARD TOLERANCE UNLESS OTHERWISE	LINEAR DIMENSIONS	ONE PLACE DECIMAL ± .060 TWO PLACE DECIMAL ± .030 THREE PLACE DECIMAL ± .015	DESIGN LOC. 17	USED ON. VAD-2 BREAKERS WITH HARTING PLUG	ECO. 2/10/92	PRINTS TO. -- -- -- -- -- -- -- --	SQUARE D COMPANY
	HOLE DIMENSIONS	PUNCHED/DRILLED ± .005	DRAWN BY. MEC CHKD BY. SPH	RAWSTOCK. NONE MATERIAL DESCRIPTION. NONE	DATE. VA21C23	TITLE. VAD-2 SCHEMATIC DIAGRAM HARTING PLUG - 250/240 OPEN & CLOSE	POWER EQUIPMENT

REV	ECO	BY	DATE
A	B1480	SPH	8/27/93

This engineering drawing (CAD / CAE or otherwise) is the proprietary property of Square D Company, not part of the public domain, and is issued with the express understanding and agreement that it is not to be reproduced or copied in whole or in part or used for furnishing information to others, or used directly or indirectly, in any way detrimental to the interest of Square D Company and is to be returned upon request by Square D Company. All Rights Reserved.

© 1993 Square D Company

SECONDARY DISCONNECT (SD)

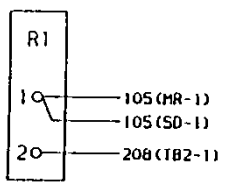

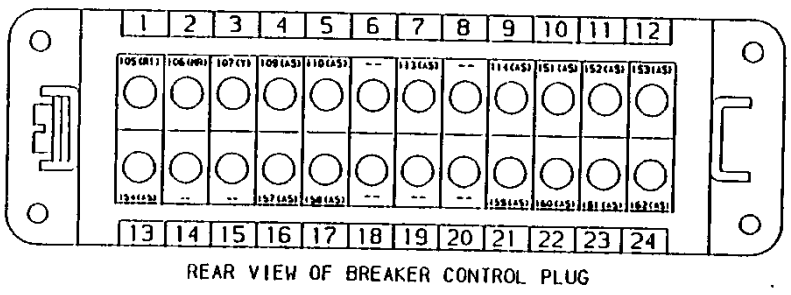

REAR VIEW OF BREAKER CONTROL PLUG

LEGEND

S2 AS	AUXILIARY SWITCH
S2 SD	SECONDARY DISCONNECT
S2 TB1	SOLENOID TERMINAL BLOCK
S2 TB2	MOTOR TERMINAL BLOCK
S2 Y	ANTI-PUMP RELAY
S2 MR	MOTOR RELAY
S2 LS	LIMIT SWITCH (MOTOR)
S2 LC	LATCH CHECK SWITCH
S2 M	SPRING CHARGING MOTOR
S2 CC	SPRING RELEASE COIL (CLOSING COIL)
S2 TC	TRIP COIL (OPENING COIL)
S2 R1	MOTOR RESISTOR (120V/500W)

NOTE

1. SEE 44069-371 FOR SCHEMATIC DIAGRAM.

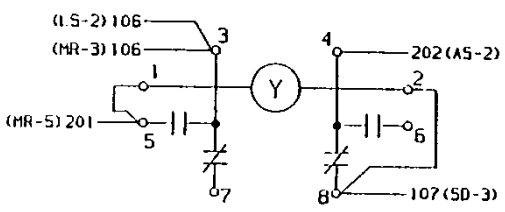

MOTOR
TB2

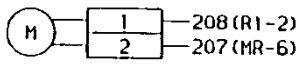

LC

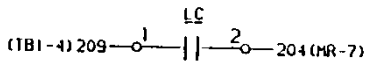

LS

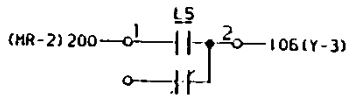

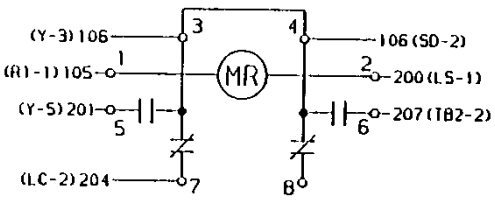

AUXILIARY SWITCH (AS)

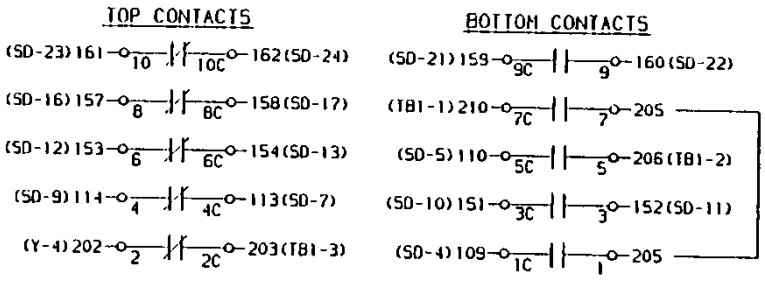

SOLENOID
TB1

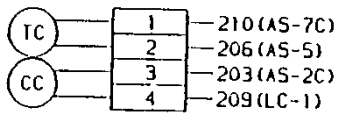

FOR CONTROL VOLTAGES

TRIP 250V DC OR 240V AC

CLOSE 250V DC OR 240V AC

⚠ - RELEASED IN SMYRNA

STANDARD TOLERANCE UNLESS OTHERWISE	LINEAR DIMENSIONS	ONE PLACE DECIMAL ± .060 TWO PLACE DECIMAL ± .030 THREE PLACE DECIMAL ± .015	DESIGN LOC. 17	USED ON. VAD-2 BREAKERS WITH HARTING PLUG	ECO. 2/10/92	PRINTS TO.	SQUARE D COMPANY POWER EQUIPMENT
	HOLE DIMENSIONS	PUNCHED/DRILLED ± .005	DRAWN BY. HEC CHKD BY. SPH	RAWSTOCK. NONE MATERIAL DESCRIPTION. NONE	DATE. VA21C23	TITLE. VAD-2 WIRING DIAGRAM HARTING PLUG - 250/240 OPEN & CLOSE	

REV	ECO	BY	DATE
A	B1480	SPI	8/27/93

This engineering drawing (CAD / CAM or otherwise) is the proprietary property of Square D Company, not part of the public domain, and is issued with the express understanding and agreement that it is not to be reproduced or copied in whole or in part or used for furnishing information to others, or used directly or indirectly, in any way detrimental to the interest of Square D Company and is to be returned upon request by Square D Company. All Rights Reserved.

© 19?? Square D Company

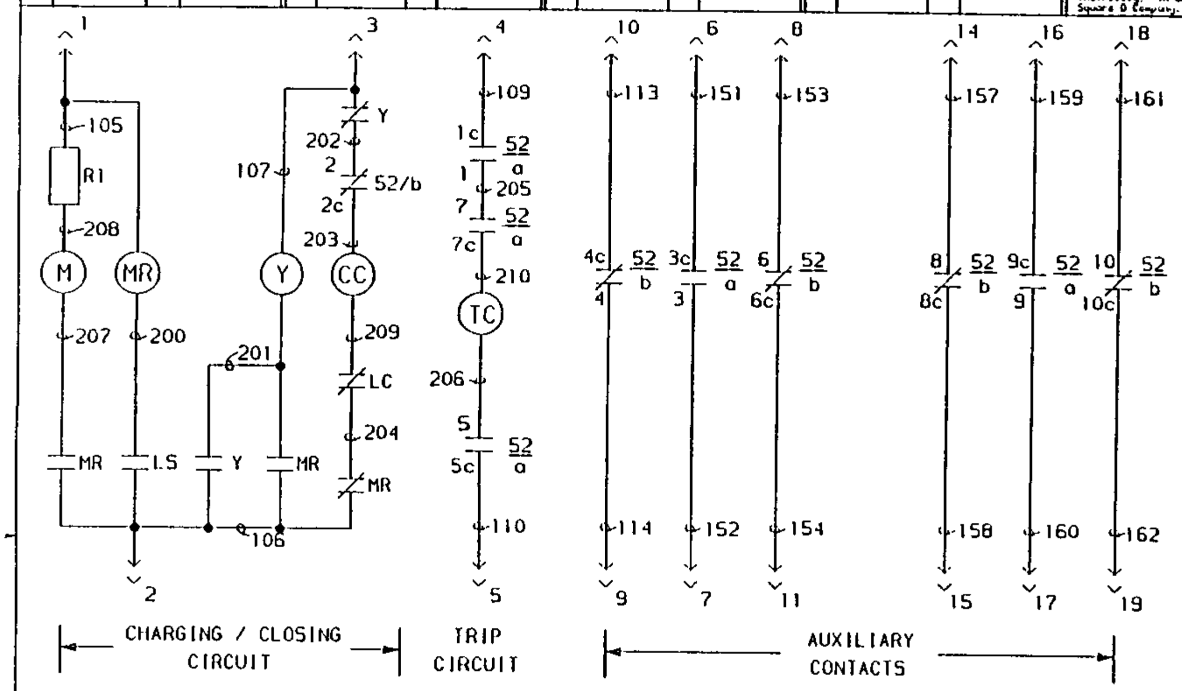

LEGEND

52 VACUUM CIRCUIT BREAKER
52M SPRING CHARGING MOTOR
52/LS SPRING CHARGING MOTOR LIMIT SWITCH
52/TC TRIP COIL (OPENING COIL)
52/CC SPRING RELEASE COIL (CLOSING COIL)
52Y ANTI-PUMP RELAY
52MR MOTOR RELAY
52/a AUX. SWITCH CONTACTS, OPEN WHEN BREAKER IS OPEN
52/b AUX. SWITCH CONTACTS, CLOSED WHEN BREAKER IS OPEN
R1 MOTOR RESISTOR (120V/500W)
52/LC LATCH CHECK SWITCH

OPERATION OF BREAKER

1. THE BREAKER WILL NOT CLOSE UNTIL THE SPRINGS ARE CHARGED.
2. WHEN THE SPRINGS ARE DISCHARGED, SPRING CHARGING LIMIT SWITCH CONTACT 52/LS IS CLOSED. THIS PICKS UP THE MOTOR RELAY (52MR), WHICH ENERGIZES THE SPRING CHARGING MOTOR (52/M). 52/M RUNS UNTIL THE CLOSING SPRINGS ARE CHARGED. WHEN THE SPRINGS ARE CHARGED, 52/LS OPENS, DROPPING OUT 52MR, WHICH DE-ENERGIZES 52M.
3. WHEN 52MR DROPS OUT, THE NORMALLY CLOSED 52MR CONTACT CLOSES ALLOWING CONTINUITY IN THE CLOSING SOLENOID 52/CC CIRCUIT. IF CLOSING SIGNAL IS APPLIED, 52/CC IS ENERGIZED, UNLATCHING THE CLOSING SPRINGS, CLOSING THE BREAKER, AND CHARGING THE OPENING SPRINGS. 52/b CONTACTS OPEN, DE-ENERGIZING 52/CC. THE DISCHARGING OF THE CLOSING SPRINGS CAUSES 52/LS TO CLOSE. 52MR PICKS UP CLOSING THE NORMALLY OPEN 52MR CONTACT ALLOWING CONTINUITY IN THE ANTI-PUMP RELAY (52Y) CIRCUIT. THE 52Y CONTACTS CHANGE STATE SEALING IN 52Y AND PREVENTING 52/CC FROM BEING RE-ENERGIZED UNTIL THE CLOSING SIGNAL IS REMOVED. THIS LIMITS THE BREAKER TO ONE CLOSING OPERATION PER CLOSING SIGNAL.
4. WHEN THE BREAKER CLOSES, 52/a AUXILIARY CONTACTS CLOSE ALLOWING CONTINUITY IN THE TRIP SOLENOID (52/TC) CIRCUIT. IF A TRIPPING SIGNAL IS APPLIED, 52/TC IS ENERGIZED, UNLATCHING THE TRIPPING SPRINGS, OPENING THE BREAKER. THE 52/a CONTACTS OPEN, DE-ENERGIZING 52/TC WHILE THE BREAKER IS OPEN.
5. REMOTE STATUS INDICATORS ARE CONNECTED TO TERMINALS TO INDICATE IF THE BREAKER IS OPEN OR CLOSED. CONTACT 52/a IS CLOSED WHEN THE BREAKER IS CLOSED. CONTACT 52/b IS CLOSED WHEN THE BREAKER IS OPEN.

NOTES:

1. BREAKER SHOWN IN OPEN POSITION & CLOSING SPRINGS CHARGED.
2. SEE 44069-374 FOR WIRING DIAGRAM

FOR CONTROL VOLTAGE:

TRIP 250V DC OR 240V AC
CLOSE 250V DC OR 240V AC

⚠ - RELEASED IN SMYRNA

STANDARD TOLERANCE UNLESS OTHERWISE	LINEAR DIMENSIONS	ONE PLACE DECIMAL	± .060
		TWO PLACE DECIMAL	± .030
		THREE PLACE DECIMAL	± .015
	HOLE DIMENSIONS	PUNCHED/DRILLED	± .005

DESIGN LOC: 17	USED ON: VAD-2 BREAKERS WITH MEXICO PLUG	ECO: 2/10/93	PRINTS TO: -- -- -- -- -- -- -- --
DRAWN BY: HEC	RAWSTOCK: NONE	DATE: VA21C23	TITLE: VAD-2 SCHEMATIC DIAGRAM MEXICO PLUG - 250/240 OPEN & CLOSE
CHKD BY: SPH	MATERIAL DESCRIPTION: NONE		

SQUARE D COMPANY
POWER EQUIPMENT

REV	ECO	BY	DATE
A	B1480	SPH	8/27/93

This engineering drawing (CAD / CAM or otherwise) is the proprietary property of Square D Company, not part of the public domain, and is loaned with the express understanding and agreement that it is not to be reproduced or copied in whole or in part or used for furnishing information to others, or used directly or indirectly, in any way detrimental to the interest of Square D Company and is to be returned upon request by Square D Company. All Rights Reserved.

© 1991 Square D Company

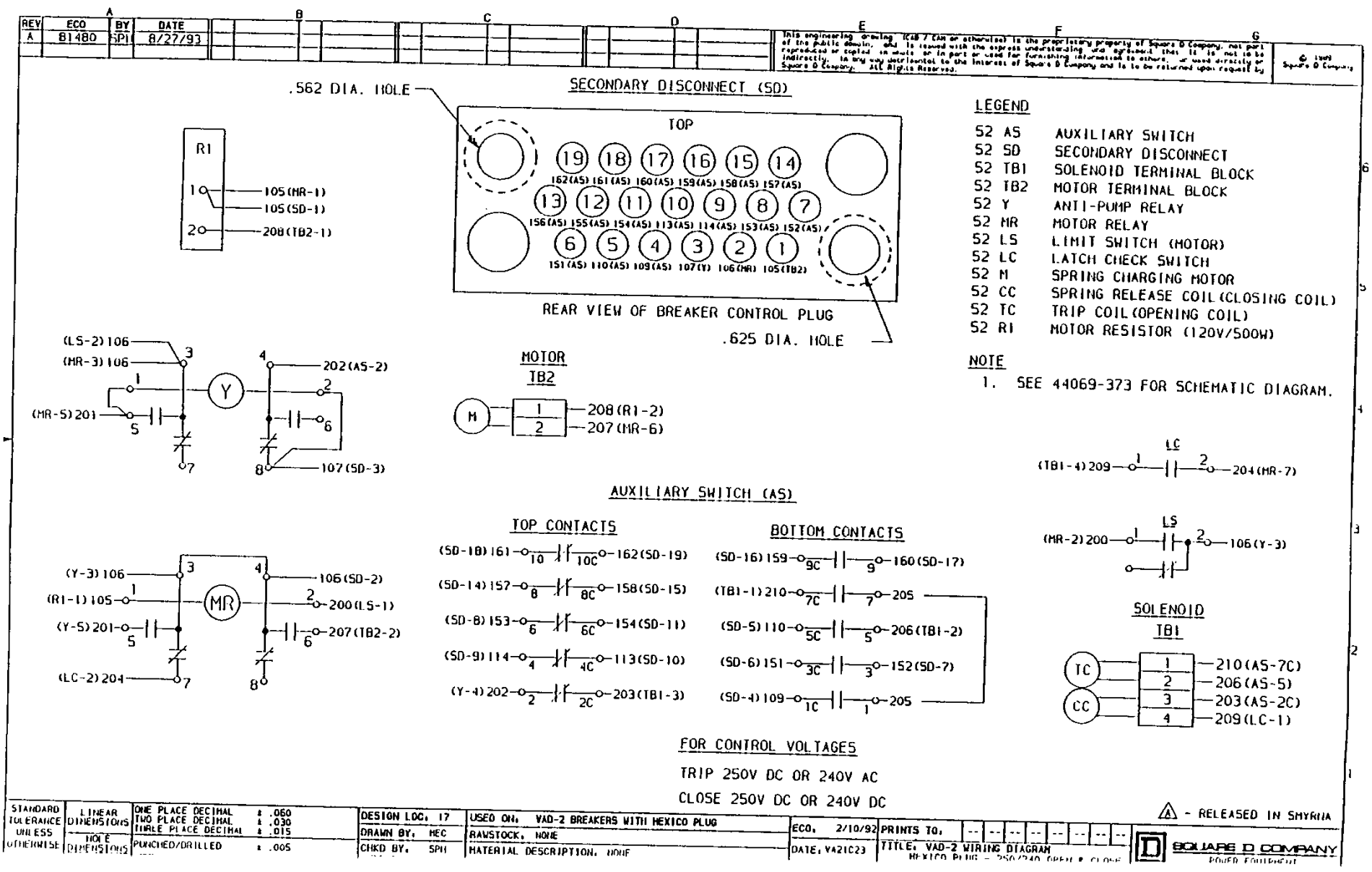

STANDARD TOLERANCE UNLESS OTHERWISE	LINEAR DIMENSIONS	ONE PLACE DECIMAL ± .060 TWO PLACE DECIMAL ± .030 THREE PLACE DECIMAL ± .015	DESIGN LOC. 17	USED ON. VAD-2 BREAKERS WITH MEXICO PLUG	ECO. 2/10/92	PRINTS TO. -- -- -- -- -- -- -- --
	NOTE DIMENSIONS	PUNCHED/DRILLED ± .005	DRAWN BY. MEC CHKD BY. SPH	RAWSTOCK. NONE MATERIAL DESCRIPTION. NONE	DATE. V421C23	TITLE. VAD-2 WIRING DIAGRAM MEXICO PLUG - 250/240 OPEN & CLOSE

SQUARE D COMPANY
POWER EQUIPMENT

REV	ECO	BY	DATE

This engineering drawing (CAD / CAM or otherwise) is the proprietary property of Square D Company, not part of the public domain, and is issued with the express understanding and agreement that it is not to be reproduced or copied in whole or in part or used for furnishing information to others, or used directly or indirectly, in any way detrimental to the interest of Square D Company and is to be returned upon request by Square D Company. All Rights Reserved.

© 1989 Square D Company

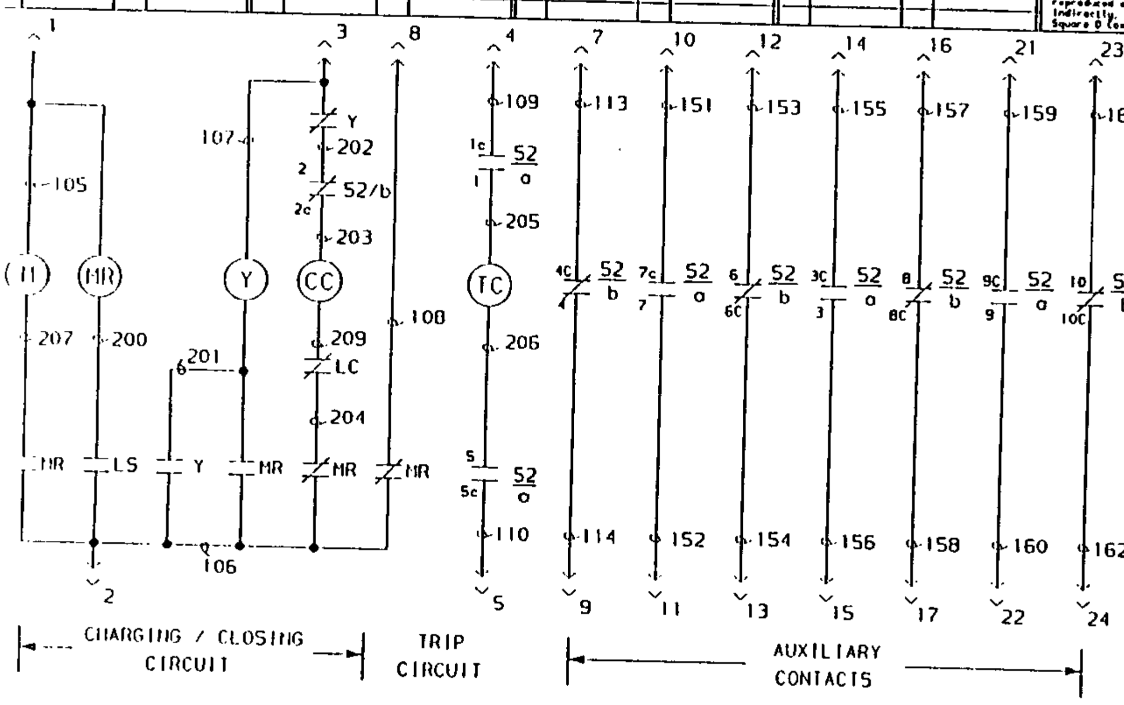

LEGEND

52 VACUUM CIRCUIT BREAKER
52M SPRING CHARGING MOTOR
52/LS SPRING CHARGING MOTOR LIMIT SWITCH
52/TC TRIP COIL (OPENING COIL)
52/CC SPRING RELEASE COIL (CLOSING COIL)
52Y ANTI-PUMP RELAY
52MR MOTOR RELAY
52/a AUX. SWITCH CONTACTS, OPEN WHEN BREAKER IS OPEN
52/b AUX. SWITCH CONTACTS, CLOSED WHEN BREAKER IS OPEN
52/LC LATCH CHECK SWITCH

OPERATION OF BREAKER

1. THE BREAKER WILL NOT CLOSE UNTIL THE SPRINGS ARE CHARGED.
2. WHEN THE SPRINGS ARE DISCHARGED, SPRING CHARGING LIMIT SWITCH CONTACT 52/LS IS CLOSED. THIS PICKS UP THE MOTOR RELAY (52MR), WHICH ENERGIZES THE SPRING CHARGING MOTOR (52/M). 52/M RUNS UNTIL THE CLOSING SPRINGS ARE CHARGED. WHEN THE SPRINGS ARE CHARGED, 52/LS OPENS, DROPPING OUT 52MR, WHICH DE-ENERGIZES 52M.
3. WHEN 52MR DROPS OUT, THE NORMALLY CLOSED 52MR CONTACT CLOSES ALLOWING CONTINUITY IN THE CLOSING SOLENOID 52/CC CIRCUIT. IF CLOSING SIGNAL IS APPLIED, 52/CC IS ENERGIZED, UNLATCHING THE CLOSING SPRINGS, CLOSING THE BREAKER, AND CHARGING THE OPENING SPRINGS. 52/b CONTACTS OPEN, DE-ENERGIZING 52/CC. THE DISCHARGING OF THE CLOSING SPRINGS CAUSES 52/LS TO CLOSE. 52MR PICKS UP CLOSING THE NORMALLY OPEN 52MR CONTACT ALLOWING CONTINUITY IN THE ANTI-PUMP RELAY (52Y) CIRCUIT. THE 52Y CONTACTS CHANGE STATE SEALING IN 52Y AND PREVENTING 52/CC FROM BEING RE-ENERGIZED UNTIL THE CLOSING SIGNAL IS REMOVED. THIS LIMITS THE BREAKER TO ONE CLOSING OPERATION PER CLOSING SIGNAL.
4. WHEN THE BREAKER CLOSES, 52/a AUXILIARY CONTACTS CLOSE ALLOWING CONTINUITY IN THE TRIP SOLENOID (52/TC) CIRCUIT. IF A TRIPPING SIGNAL IS APPLIED, 52/TC IS ENERGIZED, UNLATCHING THE TRIPPING SPRINGS, OPENING THE BREAKER. THE 52/a CONTACTS OPEN, DE-ENERGIZING 52/TC WHILE THE BREAKER IS OPEN.
5. REMOTE STATUS INDICATORS ARE CONNECTED TO TERMINALS TO INDICATE IF THE BREAKER IS OPEN OR CLOSED. CONTACT 52/a IS CLOSED WHEN THE BREAKER IS CLOSED. CONTACT 52/b IS CLOSED WHEN THE BREAKER IS OPEN.

NOTES:

1. BREAKER SHOWN IN OPEN POSITION & CLOSING SPRINGS CHARGED.
2. SEE 44069-360 FOR WIRING DIAGRAM

FOR CONTROL VOLTAGE:

TRIP 24V, 48V, 125V DC OR 120V AC
CLOSE 48V, 125V DC OR 120V AC

STANDARD TOLERANCE UNLESS OTHERWISE SPECIFIED	LINEAR DIMENSIONS	ONE PLACE DECIMAL ± .060 / TWO PLACE DECIMAL ± .030 / THREE PLACE DECIMAL ± .015	DESIGN LOC: 17	USED ON: VAD-2 BREAKERS WITH HARTING PLUG	ECO: 81508	PRINTS TO:
	HOLE DIMENSIONS	PUNCHED/DRILLED ± .005	DRAWN BY: SPH	RAWSTOCK: NONE	DATE: 9/16/93	TITLE: VAD2 SCHEMATIC DIAGRAM SPRG. CHG. IND.-HARTING PLUG
	ANGLES	DIMENSIONED ± 1° UNDIMENSIONED 90° ± 2°	CHKD BY: ---	MATERIAL DESCRIPTION: NONE	SCALE: NONE	PART# 44069-554 QTY: -
			ENGINEER: LHS	FINISH DESCRIPTION: NONE		

SQUARE D COMPANY
POWER EQUIPMENT
B 44069-554

This engineering drawing (CAD / CAM or otherwise) is the proprietary property of Square D Company, not part of the public domain, and is issued with the express understanding and agreement that it is not to be reproduced or copied in whole or in part or used for furnishing information to others, or used directly or indirectly, in any way detrimental to the interest of Square D Company and is to be returned upon request by Square D Company. All Rights Reserved.

© 1989 Square D Company

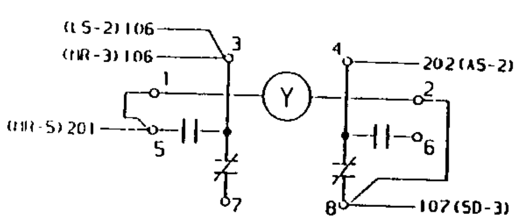

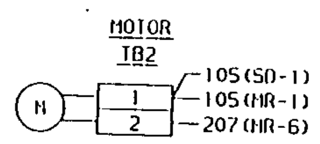

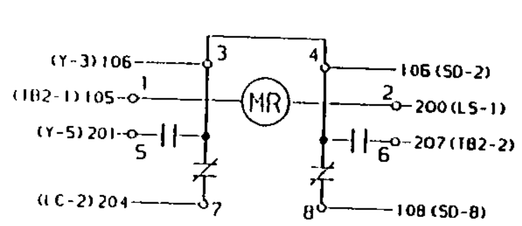

SECONDARY DISCONNECT (SD)

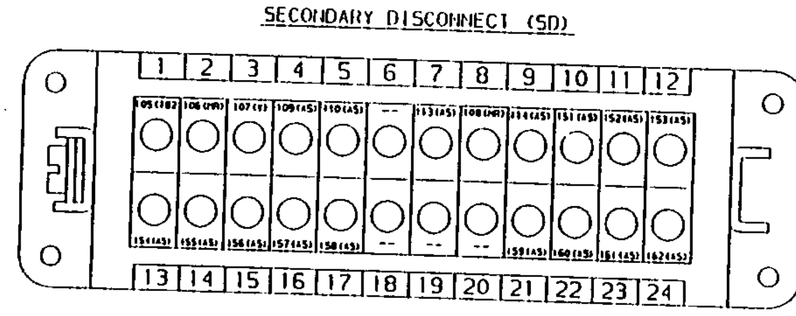

REAR VIEW OF BREAKER CONTROL PLUG

AUXILIARY SWITCH (AS)

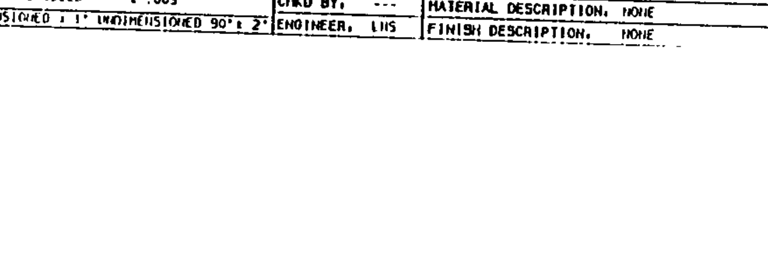

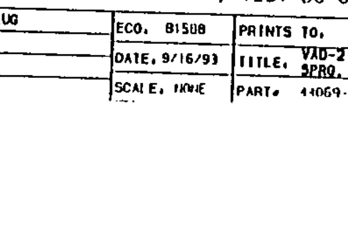

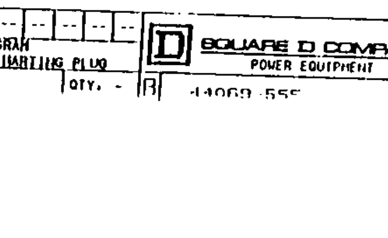

LEGEND

52 AS	AUXILIARY SWITCH
52 SD	SECONDARY DISCONNECT
52 TB1	SOLENOID TERMINAL BLOCK
52 TB2	MOTOR TERMINAL BLOCK
52 Y	ANTI-PUMP RELAY
52 MR	MOTOR RELAY
52 LS	LIMIT SWITCH (MOTOR)
52 LC	LATCH CHECK SWITCH
52 M	SPRING CHARGING MOTOR
52 CC	SPRING RELEASE COIL (CLOSING COIL)
52 TC	TRIP COIL (OPENING COIL)

NOTE

1. SEE 44069-359 FOR SCHEMATIC DIAGRAM.

FOR CONTROL VOLTAGES

TRIP 24V, 48V, 125V DC OR 120V AC

CLOSE 48V, 125V DC OR 120V AC

STANDARD TOLERANCE UNLESS OTHERWISE SPECIFIED

LINEAR DIMENSIONS	ONE PLACE DECIMAL	± .060
	TWO PLACE DECIMAL	± .030
	THREE PLACE DECIMAL	± .015
HOLE DIMENSIONS	PUNCHED/DRILLED	± .005
ANGLES	DIMENSIONED ± 1° UNDIMENSIONED 90° ± 2°	

DESIGN LOC. 17	USED ON. VAD-2 BREAKERS WITH HARTING PLUG
DRAWN BY. SPH	RAWSTOCK. NONE
CHKD BY. ---	MATERIAL DESCRIPTION. NONE
ENGINEER. LHS	FINISH DESCRIPTION. NONE

ECO. 81508	PRINTS TO. -- -- -- -- -- -- -- --
DATE. 9/16/93	TITLE. VAD-2 WIRING DIAGRAM SPRG. CHG. IND.- HARTING PLUG
SCALE. NONE	PART# 44069-555 QTY. -

SQUARE D COMPANY
POWER EQUIPMENT

B 44069-555

REV	ECO	BY	DATE
A	B1480	SPH	8/27/93

This engineering drawing (CAD / CAM or otherwise) is the proprietary property of Square D Company, not part of the public domain, and is issued with the express understanding and agreement that it is not to be reproduced or copied in whole or in part or used for furnishing information to others, or used directly or indirectly, in any way detrimental to the interest of Square D Company and is to be returned upon request by Square D Company. All Rights Reserved.

© 1989 Square D Company

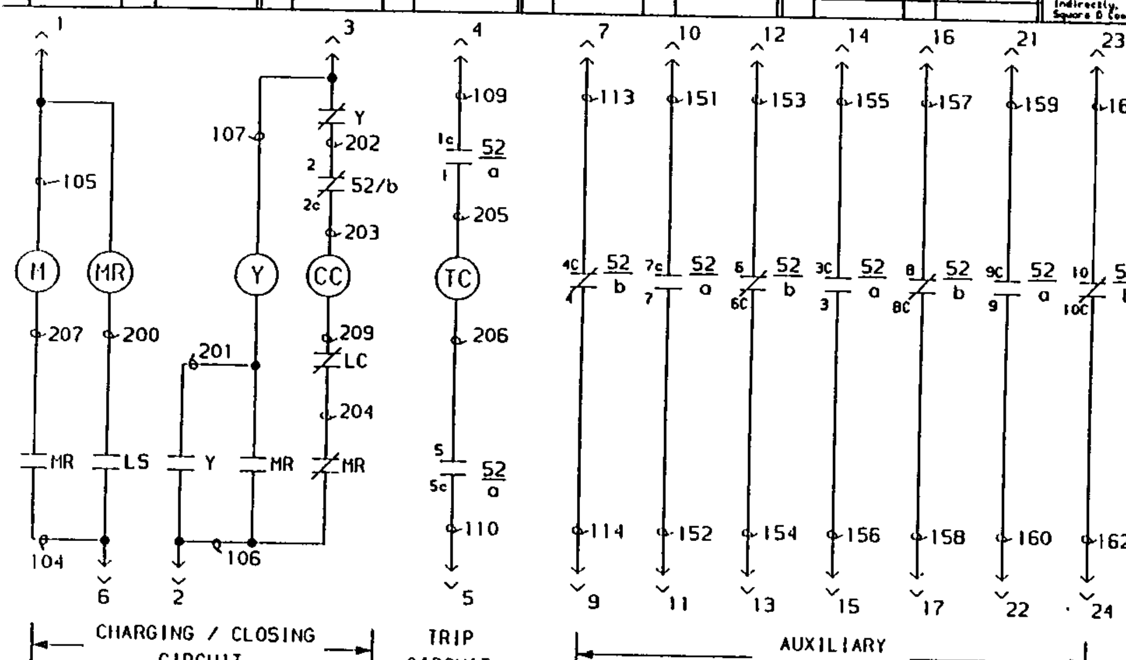

LEGEND

- 52 VACUUM CIRCUIT BREAKER
- 52M SPRING CHARGING MOTOR
- 52/LS SPRING CHARGING MOTOR LIMIT SWITCH
- 52/TC TRIP COIL (OPENING COIL)
- 52/CC SPRING RELEASE COIL (CLOSING COIL)
- 52Y ANTI-PUMP RELAY
- 52MR MOTOR RELAY
- 52/a AUX. SWITCH CONTACTS, OPEN WHEN BREAKER IS OPEN
- 52/b AUX. SWITCH CONTACTS, CLOSED WHEN BREAKER IS OPEN
- 52/LC LATCH CHECK SWITCH

OPERATION OF BREAKER

1. THE BREAKER WILL NOT CLOSE UNTIL THE SPRINGS ARE CHARGED.
2. WHEN THE SPRINGS ARE DISCHARGED, SPRING CHARGING LIMIT SWITCH CONTACT 52/LS IS CLOSED. THIS PICKS UP THE MOTOR RELAY (52MR), WHICH ENERGIZES THE SPRING CHARGING MOTOR (52/M). 52/M RUNS UNTIL THE CLOSING SPRINGS ARE CHARGED. WHEN THE SPRINGS ARE CHARGED, 52/LS OPENS, DROPPING OUT 52MR, WHICH DE-ENERGIZES 52M.
3. WHEN 52MR DROPS OUT, THE NORMALLY CLOSED 52MR CONTACT CLOSES ALLOWING CONTINUITY IN THE CLOSING SOLENOID 52/CC CIRCUIT. IF CLOSING SIGNAL IS APPLIED, 52/CC IS ENERGIZED, UNLATCHING THE CLOSING SPRINGS, CLOSING THE BREAKER, AND CHARGING THE OPENING SPRINGS. 52/b CONTACTS OPEN, DE-ENERGIZING 52/CC. THE DISCHARGING OF THE CLOSING SPRINGS CAUSES 52/LS TO CLOSE. 52MR PICKS UP CLOSING THE NORMALLY OPEN 52MR CONTACT ALLOWING CONTINUITY IN THE ANTI-PUMP RELAY (52Y) CIRCUIT. THE 52Y CONTACTS CHANGE STATE SEALING IN 52Y AND PREVENTING 52/CC FROM BEING RE-ENERGIZED UNTIL THE CLOSING SIGNAL IS REMOVED. THIS LIMITS THE BREAKER TO ONE CLOSING OPERATION PER CLOSING SIGNAL.
4. WHEN THE BREAKER CLOSES, 52/a AUXILIARY CONTACTS CLOSE ALLOWING CONTINUITY IN THE TRIP SOLENOID (52/TC) CIRCUIT. IF A TRIPPING SIGNAL IS APPLIED, 52/TC IS ENERGIZED, UNLATCHING THE TRIPPING SPRINGS, OPENING THE BREAKER. THE 52/a CONTACTS OPEN, DE-ENERGIZING 52/TC WHILE THE BREAKER IS OPEN.
5. REMOTE STATUS INDICATORS ARE CONNECTED TO TERMINALS TO INDICATE IF THE BREAKER IS OPEN OR CLOSED. CONTACT 52/a IS CLOSED WHEN THE BREAKER IS CLOSED. CONTACT 52/b IS CLOSED WHEN THE BREAKER IS OPEN.

NOTES:

1. BREAKER SHOWN IN OPEN POSITION & CLOSING SPRINGS CHARGED.
2. SEE 44069-381 FOR WIRING DIAGRAM

FOR CONTROL VOLTAGE:

TRIP 24V, 48V, 125V DC OR 120V AC
CLOSE 48V, 125V DC OR 120V AC

A - RELEASED IN SMYRNA

STANDARD TOLERANCE UNLESS OTHERWISE SPECIFIED	LINEAR DIMENSIONS	ONE PLACE DECIMAL ± .060 TWO PLACE DECIMAL ± .030 THREE PLACE DECIMAL ± .015	DESIGN LOC. 17	USED ON: VAD-2 BREAKERS WITH HARTING PLUG
	HOLE DIMENSIONS	PUNCHED/DRILLED ± .005	DRAWN BY: ARS	RAWSTOCK: NONE
	ANGLES	DIMENSIONED ± 1° UNDIMENSIONED 90° ± 2°	CHKD BY: SPH	MATERIAL DESCRIPTION: NONE
			ENGINEER: LHS	FINISH DESCRIPTION: NONE

ECO: 11/2/92	PRINTS TO: -- -- -- -- -- -- -- --	SQUARE D COMPANY POWER EQUIPMENT
DATE: SLOICIS	TITLE: VAD-2 SCHEMATIC DIAGRAM HARTING PLUG - SEPERATE CHARGE	
SCALE: NONE	PART# 44069-380 QTY: -	B 44069-380 REV A

REV	ECO	BY	DATE
A	B1480	SPH	8/27/93

This engineering drawing (CAD / CAM or otherwise) is the proprietary property of Square D Company, not part of the public domain, and is issued with the express understanding and agreement that it is not to be reproduced or copied in whole or in part or used for furnishing information to others, or used directly or indirectly, in any way detrimental to the interest of Square D Company and is to be returned upon request by Square D Company. All Rights Reserved.

© 1989 Square D Company

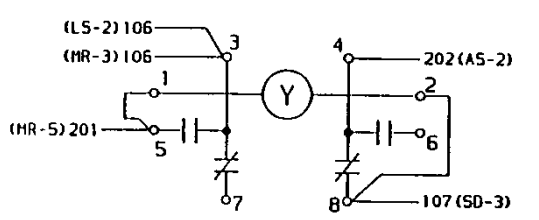

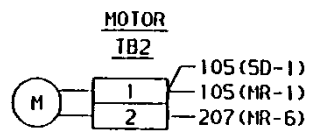

LEGEND

52 AS	AUXILIARY SWITCH
52 SD	SECONDARY DISCONNECT
52 TB1	SOLENOID TERMINAL BLOCK
52 TB2	MOTOR TERMINAL BLOCK
52 Y	ANTI-PUMP RELAY
52 MR	MOTOR RELAY
52 LS	LIMIT SWITCH (MOTOR)
52 LC	LATCH CHECK SWITCH
52 M	SPRING CHARGING MOTOR
52 CC	SPRING RELEASE COIL (CLOSING COIL)
52 TC	TRIP COIL (OPENING COIL)
52 LC	LATCH CHECK SWITCH

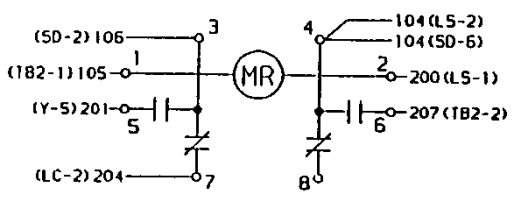

SECONDARY DISCONNECT (SD)

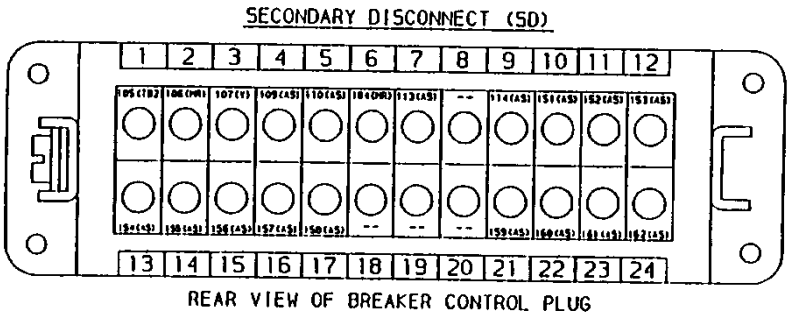

REAR VIEW OF BREAKER CONTROL PLUG

NOTE

1. SEE 44069-380 FOR SCHEMATIC DIAGRAM.

AUXILIARY SWITCH (AS)

TOP CONTACTS	BOTTOM CONTACTS
(SD-23) 161 — 10 / 10C — 162 (SD-24)	(SD-21) 159 — 9C / 9 — 160 (SD-22)
(SD-16) 157 — 8 / 8C — 158 (SD-17)	(SD-10) 151 — 7C / 7 — 152 (SD-11)
(SD-12) 153 — 6 / 6C — 154 (SD-13)	(SD-5) 110 — 5C / 5 — 206 (TB1-2)
(SD-9) 114 — 4 / 4C — 113 (SD-7)	(SD-14) 155 — 3C / 3 — 156 (SD-15)
(Y-4) 202 — 2 / 2C — 203 (TB1-3)	(SD-4) 109 — 1C / 1 — 205 (TB1-1)

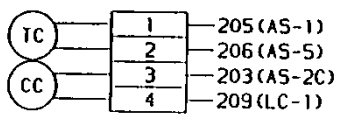

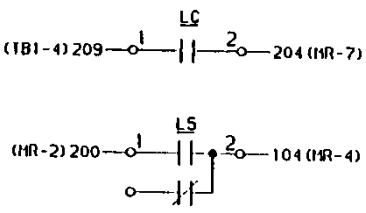

FOR CONTROL VOLTAGES

TRIP 24V, 48V, 125V DC OR 120V AC

CLOSE 48V, 125V DC OR 120V AC

A - RELEASED IN SHYRNA

STANDARD TOLERANCE UNLESS OTHERWISE SPECIFIED	LINEAR DIMENSIONS	ONE PLACE DECIMAL ± .060 TWO PLACE DECIMAL ± .030 THREE PLACE DECIMAL ± .015	DESIGN LOC. 17	USED ON. VAD-2 BREAKERS WITH HARTING PLUG	ECO. 11/2/92	PRINTS TO.	SQUARE D COMPANY POWER EQUIPMENT
	HOLE DIMENSIONS	PUNCHED/DRILLED ± .005	DRAWN BY. ARS	RAWSTOCK. NONE	DATE. 5/01/15	TITLE. VAD-2 WIRING DIAGRAM HARTING PLUG - SEPERATE CHARGE	
	ANGLES	DIMENSIONED ± 1° UNDIMENSIONED 90° ± 2°	CHKD BY. SPH	MATERIAL DESCRIPTION. NONE	SCALE. NONE	PART. 44069-381	QTY. -
			ENGINEER. LHS	FINISH DESCRIPTION. NONE			B 44069-381 REV A